MITSUBISHI ELECTRIC

General-Purpose AC Servo

MELSERVO-J3 Series

SSCNETⅢ Compatible Linear Servo

MODEL (Servo Amplifier)

MR-J3-□B-RJ004U□

MODEL (Linear Servo Motor)

LM-H2
LM-U2
LM-F

INSTRUCTION MANUAL

C

● Safety Instructions ●

(Always read these instructions before using the equipment.)

Do not attempt to install, operate, maintain or inspect the servo amplifier and linear servo motor until you have read through this Instruction Manual, Installation guide, MR-J3-□B Servo Amplifier Instruction Manual and appended documents carefully and can use the equipment correctly. Do not use the servo amplifier and linear servo motor until you have a full knowledge of the equipment, safety information and instructions.

In this Instruction Manual, the safety instruction levels are classified into "WARNING" and "CAUTION".

⚠ WARNING	Indicates that incorrect handling may cause hazardous conditions, resulting in death or severe injury.
⚠ CAUTION	Indicates that incorrect handling may cause hazardous conditions, resulting in medium or slight injury to personnel or may cause physical damage.

Note that the CAUTION level may lead to a serious consequence according to conditions. Please follow the instructions of both levels because they are important to personnel safety.

What must not be done and what must be done are indicated by the following diagrammatic symbols.

⃠: Indicates what must not be done. For example, "No Fire" is indicated by ⃠ .

●: Indicates what must be done. For example, grounding is indicated by ⏚ .

In this Instruction Manual, instructions at a lower level than the above, instructions for other functions, and so on are classified into "POINT".

After reading this installation guide, always keep it accessible to the operator.

1. To prevent electric shock, note the following

⚠ WARNING

- Before wiring or inspection, turn off the power and wait for 15 minutes or more until the charge lamp turns off. Then, confirm that the voltage between P(＋) and N(－) is safe with a voltage tester and others. Otherwise, an electric shock may occur. In addition, always confirm from the front of the servo amplifier, whether the charge lamp is off or not.
- Connect the servo amplifier and linear servo motor to ground.
- Any person who is involved in wiring and inspection should be fully competent to do the work.
- Do not attempt to wire the servo amplifier and linear servo motor until they have been installed. Otherwise, you may get an electric shock.
- Operate the switches with dry hand to prevent an electric shock.
- The cables should not be damaged, stressed, loaded, or pinched. Otherwise, you may get an electric shock.
- During power-on or operation, do not open the front cover of the servo amplifier. You may get an electric shock.
- Do not operate the servo amplifier with the front cover removed. High-voltage terminals and charging area are exposed and you may get an electric shock.
- Except for wiring or periodic inspection, do not remove the front cover even of the servo amplifier if the power is off. The servo amplifier is charged and you may get an electric shock.

2. To prevent fire, note the following

⚠ CAUTION

- Install the servo amplifier, servo motor and regenerative resistor on incombustible material. Installing them directly or close to combustibles will lead to a fire.
- Always connect a magnetic contactor (MC) between the main circuit power supply and L_1, L_2, and L_3 of the servo amplifier, and configure the wiring to be able to shut down the power supply on the side of the servo amplifier's power supply. If a magnetic contactor (MC) is not connected, continuous flow of a large current may cause a fire when the servo amplifier malfunctions.
- When a regenerative resistor is used, use an alarm signal to switch main power off. Otherwise, a regenerative transistor fault or the like may overheat the regenerative resistor, causing a fire.

3. To prevent injury, note the follow

⚠ WARNING

- The linear servo motor uses a strong magnet on the secondary side. Therefore, not only the linear servo motor installation operators but also the machine operators must use abundance of caution. For example, one who uses a medical device like a pacemaker must keep away from the machine.
- The permanent magnet on the secondary side makes the magnetic bodies generate suction. Use caution with accidents so as not to get your hand stuck.
- The performance is not guaranteed if the specified servo amplifier and linear servo motor are not combined. If used with unspecified combination, the servo amplifier or linear servo motor may be damaged. Depending on the case, it can be out of control and operate unexpectedly, resulting in extremely dangerous condition.

⚠ WARNING

- Under the packaged condition (cardboard) delivered from our company, the magnet on the secondary side does not have a serious effect on the outside. Before mounting to the machine, however, magnetic bodies (including tools) must be kept away from the secondary side (magnetic). The secondary side (magnetic) can have as double suction power as mounted normally, which may cause a serious injury. To avoid this, pay full attention to the ambience of workplace.

⚠ CAUTION

- Only the voltage specified in the Instruction Manual should be applied to each terminal, Otherwise, a burst, damage, etc. may occur.
- Connect the terminals correctly to prevent a burst, damage, etc.
- Ensure that polarity (+, −) is correct. Otherwise, a burst, damage, etc. may occur.
- Take safety measures, e.g. provide covers, to prevent accidental contact of hands and parts (cables, etc.) with the servo amplifier heat sink, regenerative resistor, linear servo motor, etc. since they may be hot while power is on or for some time after power-off. Their temperatures may be high and you may get burnt or a parts may damaged.
- The linear servo motor installation operators and machine operators must not work wearing electronic devices (watch, calculator, personal computer, etc.) and magnetic recording media (IC card, magnetic card, floppy disc, etc.) and must not bring them around a magnetic. The magnetic influence may cause the operation failure or malfunction.
- When the protective function is operated, turn off the power immediately and eliminate its cause, and then turn it on again. If the linear servo motor is continued operating without eliminating the cause, it may run unexpectedly and results in a damage and injury.
- Securely attach the linear servo motor to the machine. If attach insecurely, it may come off during operation.

4. Additional instructions

The following instructions should also be fully noted. Incorrect handling may cause a fault, injury, electric shock, etc.

(1) Transportation and installation

⚠ CAUTION

- Transport the products correctly according to their weights.
- Stacking in excess of the specified number of products is not allowed.
- Do not carry the linear servo motor by the cables, shaft or encoder.
- Do not hold the front cover to transport the servo amplifier. The servo amplifier may drop.
- Install the servo amplifier in a load-bearing place in accordance with the Instruction Manual.
- Do not climb or stand on servo equipment. Do not put heavy objects on equipment.
- The servo amplifier and linear servo motor must be installed in the specified direction.
- Leave specified clearances between the servo amplifier and control enclosure walls or other equipment.
- Do not install or operate the servo amplifier and linear servo motor which has been damaged or has any parts missing.

⚠ CAUTION

- Provide adequate protection to prevent screws and other conductive matter, oil and other combustible matter from entering the servo amplifier and linear servo motor.
- Do not drop or strike servo amplifier or linear servo motor. Isolate from all impact loads.
- The protection method of the linear servo motor is IP00. Take necessary measures against dust, oil, etc. (Refer to section 2.1.2 Installation direction.)
- When mounting the secondary side (magnet), use nonmagnetic tools.
- Securely attach the linear servo motor to the machine. If attach insecurely, the linear servo motor may come off during operation.
- Do not modify the linear servo motor.
- Take safety measures, e.g. provide covers, to prevent accidental access to the linear servo motor during operation.
- The dynamic brake can be applied to the linear servo motor, but the coasting distance becomes longer when the moving body is heavy or when the speed is high. It may result in crashing into the stroke edge, which is highly dangerous. Install the anti-crash mechanism such as an air brake or an electric/mechanical stopper such as a shock absorber to reduce the shock of movable parts. (No linear servo motor with an electromagnetic brake is available.)
- The magnetic suction power acting between the primary side (coil) and the secondary (magnet) is always acting even when the motor power is not turned on. Because of this, the machine must be designed to be rigid enough to resist the magnetic suction power and maintain the accuracy.
- The running load by friction increases in proportion to the increase of the magnetic suction power, so the design must be made to decrease as much friction as possible, for example, by mounting guides with high accuracy.
- Do not use for vertical motion applications since magnetic poles cannot be detected with a vertical application.
- Install the linear servo motor the way in which the thrust acts on the gravity center of the movable part. When the thrust does not act on the gravity center of the movable part, the moment is generated.
- Magnetic chips such as iron fragments can be attached to the permanent magnet on the secondary side, which may cause a malfunction. In the environment like this, take measures against the attachment and entry of magnetic chips.
- When the linear servo motor is operated over a long term under the condition where water for cutting or lubrication oil is splashed or where oil mist or dew condensation occurs due to supercooling or high humidity, insulation deterioration or other failures may be caused. Prevent the linear servo motor from oil and dust with a cover and take measures against dew condensation.
- More careful measures against oil and dust must be taken for the linear encoder than the linear servo motor. For details, please contact the linear encoder manufacturer individually.
- The moving direction of the linear servo motor and linear encoder must be matched. Otherwise, the motor may run unexpectedly.
- When two or more secondary side (magnet) is mounted, set the mounting screw accumulative pitch tolerance within ± 0.2mm. Clearance may be left between the secondary sides (magnets) depending on the mounting method and the numbers.
- Do not hit the primary side (coil) on the stopper. The primary side may be damaged. Design the machine so that the stopper is hit on the top table attached to the primary side (coil).
- Tap holes on the linear servo motor are for machine installation. Do not use for other purposes.
- Do not touch the linear servo motor with wet hands.
- For installation, use all screw halls and tap holes prepared on the linear servo motor.
- When the equipment has been stored for an extended period of time, consult Mitsubishi.

⚠ CAUTION

- When you keep or use it, please fulfill the following environmental conditions.

Environment			Conditions		
			Servo amplifier	Linear servo motor	
Ambient temperature	In operation	[℃]	0 to +55 (non-freezing)	0 to +40 (non-freezing)	
		[°F]	32 to 131 (non-freezing)	32 to 104 (non-freezing)	
	In storage	[℃]	−20 to +65 (non-freezing)	−15 to +70 (non-freezing)	
		[°F]	−4 to 149 (non-freezing)	5 to 158 (non-freezing)	
Ambient humidity	In operation		90%RH or less (non-condensing)	80%RH or less (non-condensing)	
	In storage		90%RH or less (non-condensing)		
Ambience			Indoors (no direct sunlight) Free from corrosive gas, flammable gas, oil mist, dust and dirt		
Altitude			Max. 1000m above sea level		
Vibration			5.9 m/s^2 or less	LM-H2 Series LM-U2 Series	X・Y : 49 m/s^2

(2) Wiring

⚠ CAUTION

- Wire the equipment correctly and securely. Otherwise, the linear servo motor may operate unexpectedly.
- Do not install a power capacitor, surge absorber or radio noise filter (FR-BIF-(H) option) between the linear servo motor and servo amplifier.
- Connect the wires to the correct phase terminals (U, V, W) of the servo amplifier and linear servo motor. Not doing so may cause unexpected operation.
- Connect the servo motor power terminal (U, V, W) to the linear servo motor power input terminal (U, V, W) directly. Do not let a magnetic contactor, etc. intervene.

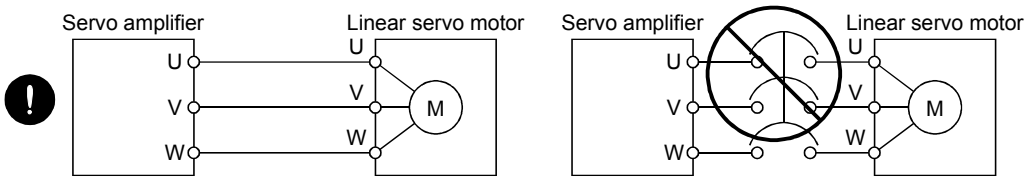

- Do not connect AC power directly to the linear servo motor. Otherwise, a fault may occur.
- The surge absorbing diode installed on the DC output signal relay of the servo amplifier must be wired in the specified direction. Otherwise, the forced stop (EM1) and other protective circuits may not operate.

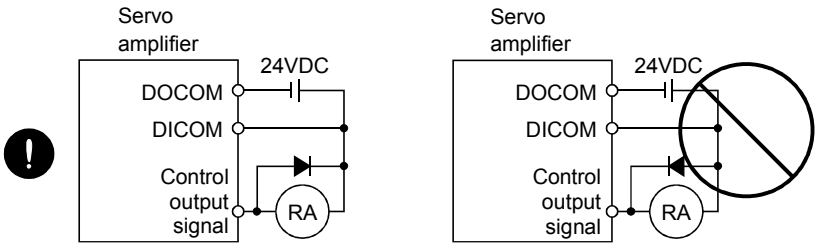

- When the cable is not tightened enough to the terminal block (connector), the cable or terminal block (connector) may generate heat because of the poor contact. Be sure to tighten the cable with specified torque.
- The cables such as power cables deriving from the primary side (coil) cannot stand the long-term flexing action. Avoid the flexing action by fixing to the movable part, etc. Also, use the cable that stands the long-term flexing action for the wiring to the servo amplifier.

(3) Test run adjustment

⚠ CAUTION

- Before operation, check the parameter settings. Improper settings may cause some machines to perform unexpected operation.
- The parameter settings must not be changed excessively. Operation will be insatiable.

(4) Usage

⚠ CAUTION

- Provide an external emergency stop circuit to ensure that operation can be stopped and power switched off immediately.
- Any person who is involved in disassembly and repair should be fully competent to do the work.
- Before resetting an alarm, make sure that the run signal of the servo amplifier is off to prevent an accident. A sudden restart is made if an alarm is reset with the run signal on.
- Do not modify the equipment.
- Use a noise filter, etc. to minimize the influence of electromagnetic interference, which may be caused by electronic equipment used near the servo amplifier.
- Burning or breaking a servo amplifier may cause a toxic gas. Do not burn or break a servo amplifier.
- Use the servo amplifier with the specified linear servo motor.

(5) Corrective actions

⚠ CAUTION

- When it is assumed that a hazardous condition may take place at the occur due to a power failure or a product fault, use a linear servo motor with electromagnetic brake or an external brake mechanism for the purpose of prevention.
- When any alarm has occurred, eliminate its cause, ensure safety, and deactivate the alarm before restarting operation.
- When power is restored after an instantaneous power failure, keep away from the machine because the machine may be restarted suddenly (design the machine so that it is secured against hazard if restarted).

(6) Maintenance, inspection and parts replacement

⚠ CAUTION

- When the linear servo motor is damaged, it must be replaced. Contact Mitsubishi Electric System & Service Co., Ltd.
- With age, the electrolytic capacitor of the servo amplifier will deteriorate. To prevent a secondary accident due to a fault, it is recommended to replace the electrolytic capacitor every 10 years when used in general environment.
  Please consult our sales representative.

(7) Disposal

⚠ CAUTION

- The linear servo motor uses a strong magnet on the secondary side. Therefore, not only the operators but also the people around the work place must use abundance of caution when the linear servo motor is disassembled or discarded. For example, one who uses a medical device like a pacemaker must keep away from the machine.
- The permanent magnet on the secondary side makes the magnetic bodies (primary side [coil] and secondary side [magnet]) generate suction. Use special caution with the handling of the secondary side which is demagnetized before/after disassembly.
- When the linear servo motor is disassembled or discarded, do not put magnetic bodies (including the primary side [coil], the other secondary sides [magnet] and tools) close to the secondary side (magnet). The secondary side (magnetic) can have as double suction power as mounted normally, which may cause a serious injury. In all cases, pay full attention to the ambience of workplace to avoid this.

⚠ CAUTION

- A suction power is generated when magnetic bodies (including tools) are put near the permanent magnet on the secondary side. Be sure to use nonmagnetic tools for the disassembly and disposal of the linear servo motor or the work around it. These are required for the improvement of workability and safety ensuring.
- The personnel who work for the disassembly or disposal of the linear servo motor or those who are around the workplace must not work wearing electronic devices (watch, calculator, personal computer, etc.) and magnetic recording media (IC card, magnetic card, floppy disc, etc.) and must not bring them around the secondary side (magnet). Magnetic influence may cause the operation failure or malfunction.
- The servo amplifier and the primary side (coil) of the linear servo motor must be discarded in accordance with "About processing of waste".
- Since the secondary side (magnet) of the linear servo motor uses the permanent magnet, demagnetize the entire secondary side (magnet) by heating over 300℃ (572℉), then discard in accordance with "About processing of waste".
- Do not touch the secondary side after the demagnetization of the secondary side (magnet) by heating over 300℃ (572℉) until it becomes cool enough. Otherwise, you may get burnt.

(8) General instruction

- To illustrate details, the equipment in the diagrams of this Specifications and Instruction Manual may have been drawn without covers and safety guards. When the equipment is operated, the covers and safety guards must be installed as specified. Operation must be performed in accordance with this Specifications and Instruction Manual.

● About processing of waste ●

When you discard servo amplifier, a battery (primary battery), and other option articles, please follow the law of each country (area).

⚠ FOR MAXIMUM SAFETY

- These products have been manufactured as a general-purpose part for general industries, and have not been designed or manufactured to be incorporated in a device or system used in purposes related to human life.
- Before using the products for special purposes such as nuclear power, electric power, aerospace, medicine, passenger movement vehicles or under water relays, contact Mitsubishi.
- These products have been manufactured under strict quality control. However, when installing the product where major accidents or losses could occur if the product fails, install appropriate backup or failsafe functions in the system.

⚠ EEP-ROM life

The number of write times to the EEP-ROM, which stores parameter settings, etc., is limited to 100,000. If the total number of the following operations exceeds 100,000, the servo amplifier and/or converter unit may fail when the EEP-ROM reaches the end of its useful life.

- Write to the EEP-ROM due to parameter setting changes
- Write to the EEP-ROM due to device changes

Precautions for Choosing the Products

Mitsubishi will not be held liable for damage caused by factors found not to be the cause of Mitsubishi; machine damage or lost profits caused by faults in the Mitsubishi products; damage, secondary damage, accident compensation caused by special factors unpredictable by Mitsubishi; damages to products other than Mitsubishi products; and to other duties.

● Handling of Linear Servo Motor ●

1. Magnetic suction

The secondary side of the linear servo motor contains a strong permanent magnet, so a magnetic suction power (power by which a magnet attracts magnetic bodies) is generated toward magnetic bodies such as iron.

This magnet suction is always acting whether the motor power is turned ON/OFF.

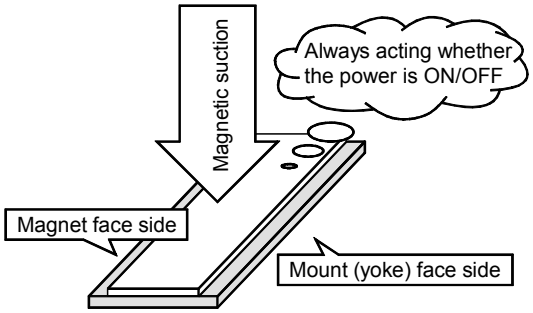

The magnetic fluxes generating from the permanent magnet disperse in the air from the magnet face side (facing the primary side), and most of them do not leak to the mount (yoke) side for its structure.

Because of this, a magnetic suction power occurs on the magnet face side of the secondary side and does not on the mount (yoke) face side.

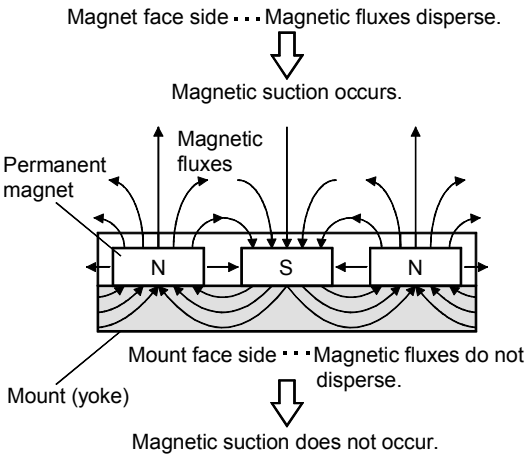

The permanent magnet used for the linear servo motor is very strong.

When an A4-sized iron sheet is fully attracted, the magnetic suction power becomes as high as 2.5t. Use abundance of caution with the handling.

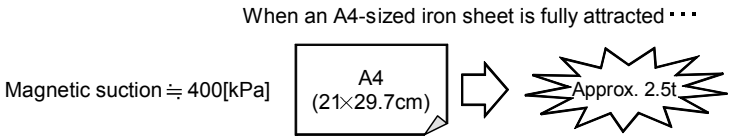

2. For the safety

The magnetic suction power is in inverse proportion to square of the distance to a magnetic body, so it drastically increases when the distance becomes small.

When mounting the secondary side of the linear side motor, ensure the sufficient distance from the magnetic bodies around it and securely fix those magnetic bodies.

3. Notes on handling

(1) Handling must be done by the engineers who have a full knowledge of this product.

(2) One who uses a medical device like a pacemaker must keep away from the machine and equipment.

(3) Do not wear metals such as watch, pierced earring, necklace, etc.

(4) Use nonmagnetic tools.
(Example) Explosion-proof beryllium copper alloy safety tools: bealon (NGK Insulators, Ltd.)

(5) Do not put magnetic card, watch, portable phone, etc close to the motor.

(6) Do not add a shock or a stress on the mold part of the product. (Otherwise, the motor may be damaged.)

(7) Display "Note a strong magnetic." or the like and take action by giving cautions to the surrounding, etc.

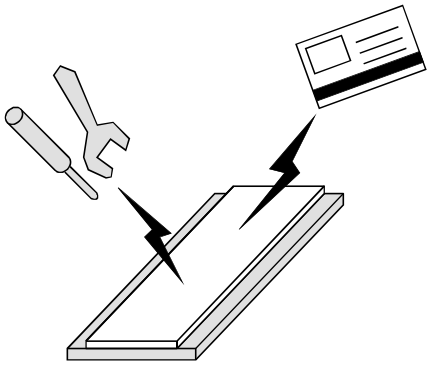

4. Disposal of linear servo motor

(1) The primary side must be discarded as industrial waste.

(2) The secondary side must be discarded as industrial waste after demagnetizing the secondary side over 300℃ (572℉).

(3) When the demagnetization is not possible, pack into a box and return to us.

(4) Do not leave the product.

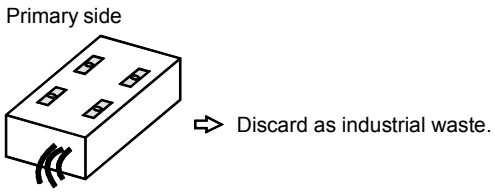

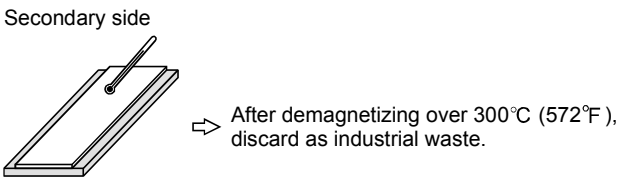

COMPLIANCE WITH EC DIRECTIVES

1. WHAT ARE EC DIRECTIVES?

The EC directives were issued to standardize the regulations of the EU countries and ensure smooth distribution of safety-guaranteed products. In the EU countries, the machinery directive (effective in January, 1995), EMC directive (effective in January, 1996) and low voltage directive (effective in January, 1997) of the EC directives require that products to be sold should meet their fundamental safety requirements and carry the CE marks (CE marking). CE marking applies to machines and equipment into which servo amplifiers have been installed.

(1) EMC directive

The EMC directive applies not to the servo units alone but to servo-incorporated machines and equipment. This requires the EMC filters to be used with the servo-incorporated machines and equipment to comply with the EMC directive. For specific EMC directive conforming methods, refer to the EMC Installation Guidelines (IB(NA)67310).

(2) Low voltage directive

The low voltage directive applies also to servo units alone. Hence, they are designed to comply with the low voltage directive.

This servo is certified by TUV, third-party assessment organization, to comply with the low voltage directive.

(3) Machine directive

Not being machines, the servo amplifiers need not comply with this directive.

2. PRECAUTIONS FOR COMPLIANCE

(1) Servo amplifiers used

Use the servo amplifiers which comply with the standard model.

Servo amplifier :MR-J3-10B-RJ004 to MR-J3-15KB-RJ004
MR-J3-22KB4-RJ004

(2) Configuration

The control circuit provide safe separation to the main circuit in the servo amplifier.

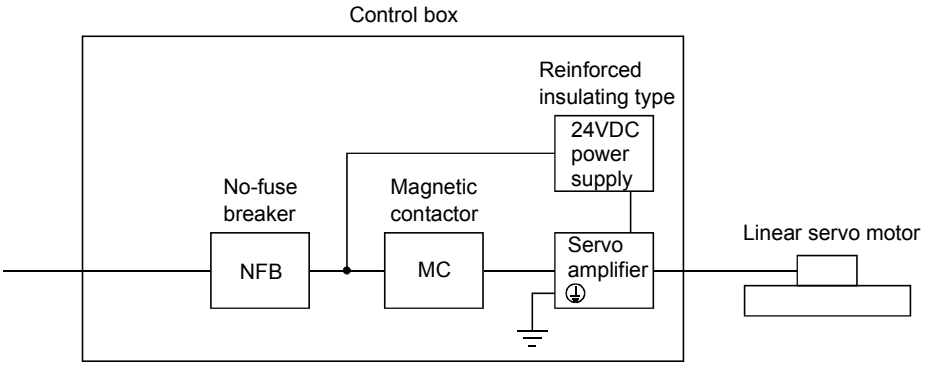

(3) Environment

Operate the servo amplifier at or above the contamination level 2 set forth in IEC60664-1. For this purpose, install the servo amplifier in a control box which is protected against water, oil, carbon, dust, dirt, etc. (IP54).

(4) Power supply

(a) This servo amplifier can be supplied from star-connected supply with earthed neutral point of overvoltage category III set forth in IEC60664-1. However, when using the neutral point of 400V class for single phase supply, a reinforced insulating transformer is required in the power input section.

(b) When supplying interface power from external, use a 24VDC power supply which has been insulation-reinforced in I/O.

(5) Grounding

(a) To prevent an electric shock, always connect the protective earth (PE) terminals (marked ⏚) of the servo amplifier to the protective earth (PE) of the control box.

(b) Do not connect two ground cables to the same protective earth (PE) terminal. Always connect the cables to the terminals one-to-one.

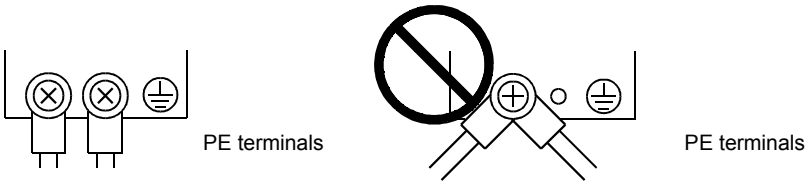

(c) If a leakage current breaker is used to prevent an electric shock, the protective earth (PE) terminals of the servo amplifier must be connected to the corresponding earth terminals.

(6) Wiring

The cables to be connected to the terminal block of the servo amplifier must have crimping terminals provided with insulating tubes to prevent contact with adjacent terminals.

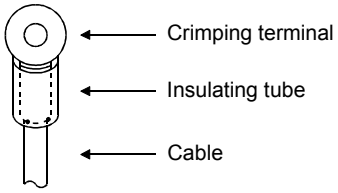

(7) Auxiliary equipment and options

(a) The no-fuse breaker and magnetic contactor used should be the EN or IEC standard-compliant products of the models described in MR-J3-□B Servo Amplifier Instruction Manual section 11.12.
Use a type B (Note) breaker. When it is not used, provide insulation between the servo amplifier and other device by double insulation or reinforced insulation, or install a transformer between the main power supply and servo amplifier.
Note. Type A: AC and pulse detectable
Type B: Both AC and DC detectable

(b) The sizes of the cables described in section 4.2 meet the following requirements. To meet the other requirements, follow Table 5 and Appendix C in EN60204-1.
・Ambient temperature: 40 (104) [°C (°F)]
・Sheath: PVC (polyvinyl chloride)
・Installed on wall surface or open table tray

(c) Use the EMC filter for noise reduction.

(8) Performing EMC tests

When EMC tests are run on a machine/device into which the servo amplifier has been installed, it must conform to the electromagnetic compatibility (immunity/emission) standards after it has satisfied the operating environment/electrical equipment specifications.

For the other EMC directive guidelines on the servo amplifier, refer to the EMC Installation Guidelines (IB(NA)67310).

<<About the manuals>>

This Instruction Manual and the MR-J3-□B Servo Amplifier Instruction Manual are required if you use the linear servo for the first time. Always purchase them and use the linear servo safely.

Relevant manuals

Manual name	Manual No.
MELSERVO-J3 Series Instruction and Cautions for Safe Use of AC Servos	IB(NA)0300077
MR-J3-□B Servo Amplifier Instruction Manual	SH(NA)030051
EMC Installation Guidelines	IB(NA)67310

<<About the wires used for wiring>>

Wiring wires mentioned in this instruction manual are selected based on the ambient temperature of 40°C (104°F).

MEMO

CONTENTS

MEMO

1. FUNCTIONS AND CONFIGURATION

1.1 Introduction

In fields of semiconductor and liquid crystal related equipment, installed machine, etc. with strong demands for high accuracy, high-speed and high efficiency, the system using the linear servo motor for drive shaft is increasing. Since the linear servo system can obtain the characteristics of the high-speed and the high acceleration/deceleration greater than the ball screw drive system, and does not have a ball screw wear which is a weak point in the ball screw drive system, it can extend the life of the equipments. In addition, a response error does not occur and so the high accuracy system can be established.
The following shows the differences between the linear servo motor and the rotating servo motor.

Classification	Item		Differences		Remarks
			Linear servo motor (MR-J3-□B-RJ004)	Rotating servo motor (MR-J3-□B)	
External I/O signal	Stroke limit input signal (FLS, RLS)		Required (when magnetic pole is detected)	Not required	Automatically turns ON in the parameter setting.
Motor pole adjustment	Magnetic pole detection operation		Required	Not required (adjusted at shipment)	Automatically executed at the first servo-on after turning the power on. For the absolute position linear encoder, the magnetic polarity detection can be made invalid in the setting of parameter No.PS01. (Refer to section 5.2.2 (2).)
Home position return	Home position reference position		1048576 pluses unit (Initial value)	Servo motor 1 rotation unit	The home position pitch can be changed in the parameter settings. (Refer to section 5.3)
Absolute position detection system	Battery for absolute position encoder (MR-J3BAT)		Not required	Required	The following alarm/warning is not detected. ・Absolute position erase (25) ・Battery cable disconnection warning (92) ・Battery warning (9F) ・Absolute position counter warning (E3)
Alarm/warning	Alarm/warning designed exclusively for the linear servo motor		Addition		Alarm/warning which is added or the contents is changed ・Encoder error1 (16) ・Encoder error2 (20) ・Initial magnetic pole detection error (27) ・Linear encoder error2 (28) ・Linear encoder error1 (2A) ・Linear servo control error (42) ・Linear servo motor overheat (46) ・Overload1 (50) ・Overload2 (51) ・Linear servo motor overheat warning (E2)
Auto tuning	Load inertia moment ratio (J)		Load mass ratio	Load inertia moment ratio	
MR Configurator 221 (Ver. B3 or later)	Motor speed (data display, setting)		Unit: mm/s	Unit: r/min	
	Test operation function	Positioning operation	Available	Available	
		Motor-less operation	Not available	Available	
		JOG operation	Not available	Available	
		Program operation	Available	Available	

1.2 Servo amplifier standard specifications

Item \ Servo amplifier MR-J3-□-RJ004U***				10B	20B	40B	60B	70B	100B	200B	350B	500B	700B	11KB	15KB	22KB4
Power supply	Voltage/frequency			3-phase or 1-phase 200 to 230VAC, 50/60Hz					3-phase 200 to 230VAC, 50/60Hz							3-phase 380 to 480VAC, 50/60Hz
Power supply	Permissible voltage fluctuation			3-phase or 1-phase 200 to 230VAC: 170 to 253VAC					3-phase 170 to 253VAC							3-phase 323 to 528VAC
Power supply	Permissible frequency fluctuation			Within ±5%												
Power supply	Power supply capacity			Refer to the specification list of the linear servo motor.												
Power supply	Inrush current			Refer to section 10.5 "MR-J3-□B Servo Amplifier Instruction Manual"												
Control circuit power supply	Voltage, frequency			1-phase 200 to 230VAC, 50/60Hz												1-phase 380 to 480VAC, 50/60Hz
Control circuit power supply	Permissible voltage fluctuation			1-phase 170 to 253VAC												1-phase 323 to 528VAC
Control circuit power supply	Permissible frequency fluctuation			Within ±5%												
Control circuit power supply	Input			30W								45W				
Control circuit power supply	Inrush current			Refer to section 10.5 "MR-J3-□B Servo Amplifier Instruction Manual"												
Interface power supply	Voltage			24VDC±10%												
Interface power supply	Power supply capacity			(Note 1) 150mA												
Control System				Sine-wave PWM control, current control system												
Dynamic brake				Built-in											External option	
Protective functions				Overcurrent shut-off, regenerative overvoltage shut-off, overload shut-off (electronic thermal relay), servo motor overheat protection, encoder error protection, regenerative error protection, undervoltage, instantaneous power failure protection, overspeed protection, excessive error protection												
Structure				Self-cooled, open (IP00)				Force-cooling, open (IP00)								
Environment	Ambient temperature	In operation	[℃]	(Note 2) 0 to +55 (non-freezing)												
Environment	Ambient temperature	In operation	[°F]	(Note 2) 32 to +131 (non-freezing)												
Environment	Ambient temperature	In storage	[℃]	−20 to +65 (non-freezing)												
Environment	Ambient temperature	In storage	[°F]	−4 to +149 (non-freezing)												
Environment	Ambient humidity	In operation		90%RH or less (non-condensing)												
Environment	Ambient humidity	In storage		90%RH or less (non-condensing)												
Environment	Ambient			Indoors (no direct sunlight) Free from corrosive gas, flammable gas, oil mist, dust and dirt												
Environment	Altitude			Max. 1000m above sea level												
Environment	Vibration			5.9 [m/s^2] or less												
Mass			[kg]	0.8	0.8	1.0	1.0	1.4	1.4	2.1	2.3	4.6	6.2	18	18	19
Mass			[lb]	1.8	1.8	2.2	2.2	3.1	3.1	4.63	5.07	10.1	13.7	39.7	39.7	41.9

Note 1. 150mA is the value applicable when all I/O signals are used. The current capacity can be decreased by reducing the number of I/O points.

2. When closely mounting the servo amplifier of MR-J3-350B-RJ004U*** or less, operate them at the ambient temperatures of 0 to 45°C (32 to 113°F) or at 75% or smaller effective load ratio.

1.3 Function list

The following table lists the functions of this servo. For details of the functions, refer to the reference field.

Function	Description	Reference
Absolute position detection system	Merely setting a home position once makes home position return unnecessary at every power-on.	Section 5.7
Gain changing function	You can switch between gains during rotation and gains during stop or use an external signal to change gains during operation.	MR-J3-□B Servo Amplifier Instruction Manual
Advanced vibration suppression control	This function suppresses vibration at the arm end or residual vibration.	
Adaptive filter Ⅱ	Servo amplifier detects mechanical resonance and sets filter characteristics automatically to suppress mechanical vibration.	
Low-pass filter	Suppresses high-frequency resonance which occurs as servo system response is increased.	
Machine analyzer function	Analyzes the frequency characteristic of the mechanical system by simply connecting a MR Configurator-installed personal computer and servo amplifier. MR Configurator MRZJW3-SETUP221E is necessary for this function.	
Machine simulation	Can simulate machine motions on a personal computer screen on the basis of the machine analyzer results. MR Configurator MRZJW3-SETUP221E is necessary for this function.	
Gain search function	Personal computer changes gains automatically and searches for overshoot-free gains in a short time. MR Configurator MRZJW3-SETUP221E is necessary for this function.	
Slight vibration suppression control	Suppresses vibration of ±1 pulse produced at a linear servo motor stop.	MR-J3-□B Servo Amplifier Instruction Manual
Auto tuning	Automatically adjusts the gain to optimum value if load applied to the linear servo motor shaft varies. Higher in performance than MR-J2-Super series servo amplifier.	
Brake unit	Used when the regenerative option cannot provide enough regenerative power. Can be used with the servo amplifier of 5kW or more.	
Power regenerative converter	Used when the regenerative option cannot provide enough regenerative power. Can be used with the servo amplifier of 5kW or more.	
Regenerative option	Used when the built-in regenerative resistor of the servo amplifier does not have sufficient regenerative capability for the regenerative power generated.	
Alarm history clear	Alarm history is cleared.	
Output signal (DO) forced output	Output signal can be forced on/off independently of the servo status. Use this function for output signal wiring check, etc.	
Test operation mode	Positioning operation・DO forced output. However, MR Configurator MRZJW3-SETUP221E is necessary for positioning operation.	
Analog monitor output	Servo status is output in terms of voltage in real time.	Parameter No.PC09
MR Configurator	Using a personal computer, parameter setting, test operation, status display, etc. can be performed.	Section 5.4

1.4 Model code definition

(1) Rating plate

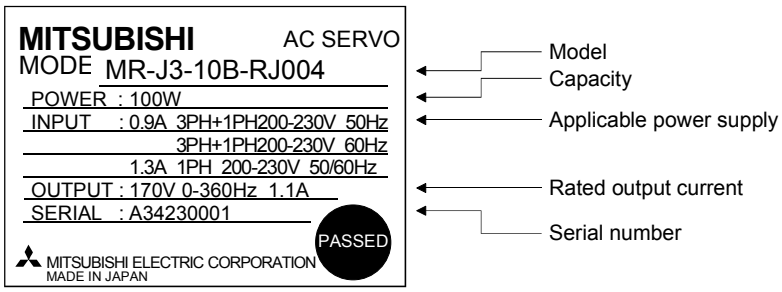

(2) Model

(a) 200V class

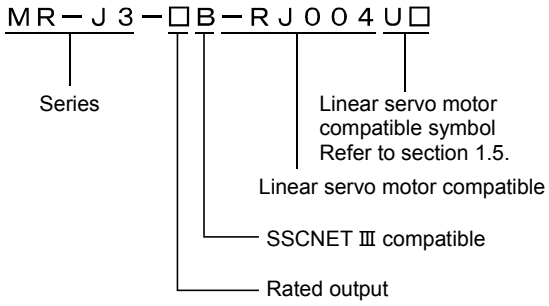

Symbol	Rated output [kW]
10	0.1
20	0.2
40	0.4
60	0.6
70	0.75
100	1
200	2
350	3.5
500	5
700	7
11K	11
15K	15

(b) 400V class

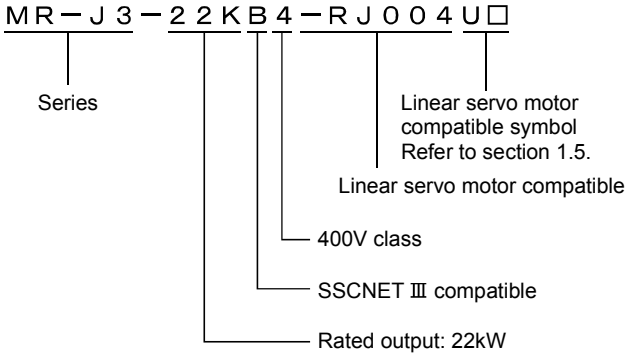

1.5 Combinations of Servo Amplifiers and Linear Servo Motors

POINT

- Check the linear servo compatible symbols (U□) and use the servo amplifier and linear servo motor with correct combination. When used with incorrect combination, the servo amplifier or linear servo motor may fail.

(1) LM-H2 series

Linear servo motor		Servo amplifier
Primary side (coil)	Secondary side (magnet)	
LM-H2P1A-06M-4SS0	LM-H2S10-288-4SS0, LM-H2S10-384-4SS0, LM-H2S10-480-4SS0 LM-H2S10-768-4SS0	MR-J3-40B-RJ004U500
LM-H2P2A-12M-1SS0	LM-H2S20-288-1SS0, LM-H2S20-384-1SS0, LM-H2S20-480-1SS0 LM-H2S20-768-1SS0	MR-J3-40B-RJ004U501
LM-H2P2B-24M-1SS0		MR-J3-70B-RJ004U502
LM-H2P2C-36M-1SS0		MR-J3-200B-RJ004U503
LM-H2P2D-48M-1SS0		MR-J3-200B-RJ004U504
LM-H2P3A-24M-1SS0	LM-H2S30-288-1SS0, LM-H2S30-384-1SS0, LM-H2S30-480-1SS0 LM-H2S30-768-1SS0	MR-J3-70B-RJ004U505
LM-H2P3B-48M-1SS0		MR-J3-200B-RJ004U506
LM-H2P3C-72M-1SS0		MR-J3-350B-RJ004U507
LM-H2P3D-96M-1SS0		MR-J3-500B-RJ004U508

(2) LM-U2 series

Linear servo motor		Servo amplifier
Primary side (coil)	Secondary side (magnet)	
LM-U2PAB-05M-0SS0	LM-U2SA0-240-0SS0, LM-U2SA0-300-0SS0, LM-U2SA0-420-0SS0	MR-J3-20B-RJ004U512
LM-U2PAD-10M-0SS0		MR-J3-40B-RJ004U513
LM-U2PAF-15M-0SS0		MR-J3-40B-RJ004U514
LM-U2PBB-07M-1SS0	LM-U2SB0-240-1SS0, LM-U2SB0-300-1SS0, LM-U2SB0-420-1SS0	MR-J3-20B-RJ004U515
LM-U2PBD-15M-1SS0		MR-J3-60B-RJ004U516
LM-U2PBF-22M-1SS0		MR-J3-70B-RJ004U517
LM-U2P2B-40M-2SS0	LM-U2S20-300-2SS0, LM-U2S20-480-2SS0	MR-J3-200B-RJ004U509
LM-U2P2C-60M-2SS0		MR-J3-350B-RJ004U510
LM-U2P2D-80M-2SS0		MR-J3-500B-RJ004U511

(3) LM-F series

(a) Self-cooling

Linear servo motor		Servo amplifier
Primary side (coil)	Secondary side (magnet)	
LM-FP2B-06M-1SS0	LM-FS20-480-1SS0, LM-FS20-576-1SS0	MR-J3-200B-RJ004U518
LM-FP2D-12M-1SS0		MR-J3-500B-RJ004U520
LM-FP2F-18M-1SS0		MR-J3-700B-RJ004U522
LM-FP4B-12M-1SS0	LM-FS40-480-1SS0, LM-FS40-576-1SS0	MR-J3-500B-RJ004U524
LM-FP4D-24M-1SS0		MR-J3-700B-RJ004U526
LM-FP4F-36M-1SS0		MR-J3-11KB-RJ004U528
LM-FP4H-48M-1SS0		MR-J3-15KB-RJ004U530
LM-FP5H-60M-1SS0	LM-FS50-480-1SS0, LM-FS50-576-1SS0	(Note) MR-J3-22KB4-RJ004U532

Note. The servo amplifier is 400V class. A 200V class servo amplifier cannot be used.

(b) Liquid-cooling

Linear servo motor		Servo amplifier
Primary side (coil)	Secondary side (magnet)	
LM-FP2B-06M-1SS0	LM-FS20-480-1SS0, LM-FS20-576-1SS0	MR-J3-200B-RJ004U519
LM-FP2D-12M-1SS0		MR-J3-500B-RJ004U521
LM-FP2F-18M-1SS0		MR-J3-700B-RJ004U523
LM-FP4B-12M-1SS0	LM-FS40-480-1SS0, LM-FS40-576-1SS0	MR-J3-500B-RJ004U525
LM-FP4D-24M-1SS0		MR-J3-700B-RJ004U527
LM-FP4F-36M-1SS0		MR-J3-11KB-RJ004U529
LM-FP4H-48M-1SS0		MR-J3-15KB-RJ004U531
LM-FP5H-60M-1SS0	LM-FS50-480-1SS0, LM-FS50-576-1SS0	(Note) MR-J3-22KB4-RJ004U533

Note. The servo amplifier is 400V class. A 200V class servo amplifier cannot be used.

1.6 Parts identification

(1) MR-J3-100B-RJ004 or less

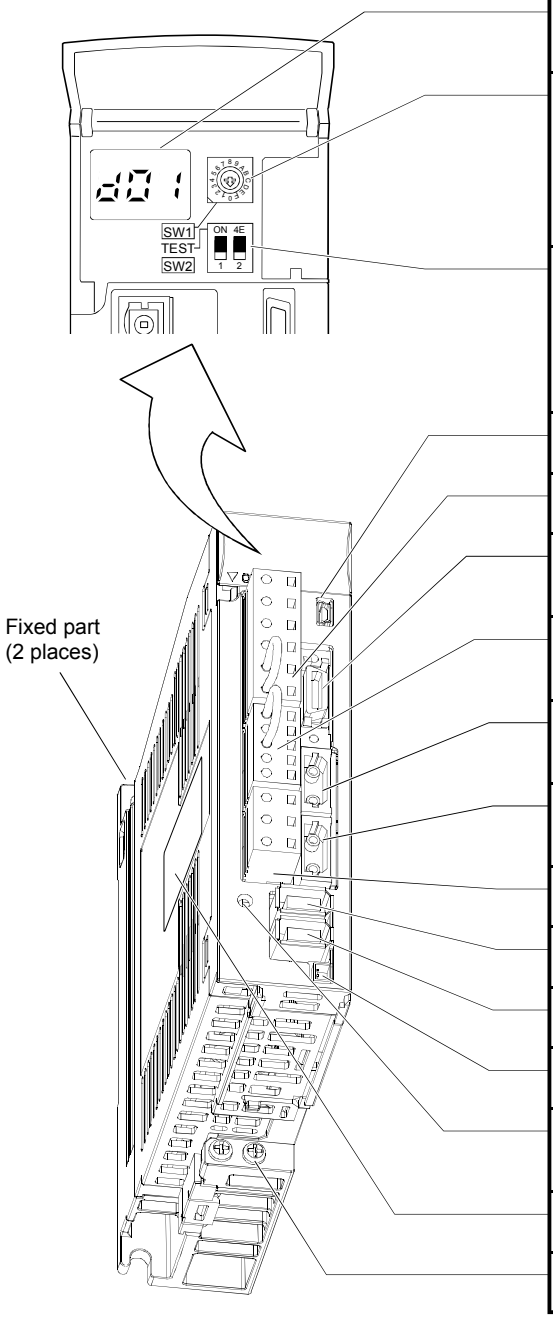

Name/Application	Detailed explanation
Display The 3-digit, seven-segment LED shows the servo status and alarm number.	Refer to the MR-J3-□B Servo Amplifier Instruction Manual.
Rotary axis setting switch (SW1) SW1 Used to set the axis No. of servo amplifier.	
Test operation select switch (SW2-1) Used to perform the test operation mode by using MR Configurator. SW2 1 2 Spare (Be sure to set to the "Down" position).	
USB communication connector (CN5) Used to connect the personal computer.	
Main circuit power supply connector (CNP1) Used to connect the input power supply.	Section 4.2
I/O signal connector (CN3) Used to connect digital I/O signals. More over an analog monitor is output.	Section 4.3
Control circuit connector (CNP2) Connect the control circuit power supply/regenerative option.	Section 4.2
SSCNETⅢ cable connector (CN1A) Used to connect the servo system controller or the front axis servo amplifier.	Refer to the MR-J3-□B Servo Amplifier Instruction Manual.
SSCNETⅢ cable connector (CN1B) Used to connect the rear axis servo amplifier. For the final axis, puts a cap.	
Servo motor power supply connector (CNP3) Used to connect the servo motor.	Chapter 2 Section 4.2
Connector for thermistor (CN2) Used to connect the thermistor of the linear servo motor.	Chapter 2
Encoder connector (CN2L) Used to connect the linear encoder.	Chapter 3
Connector for manufacturer setting (CN4) Not used for this servo amplifier.	
Charge lamp Lit to indicate that the main circuit is charged. While this lamp is lit, do not reconnect the cables.	
Rating plate	Section 1.4
Protective earth (PE) terminal (⏚) Ground terminal.	Section 4.2

(2) MR-J3-200B-RJ004

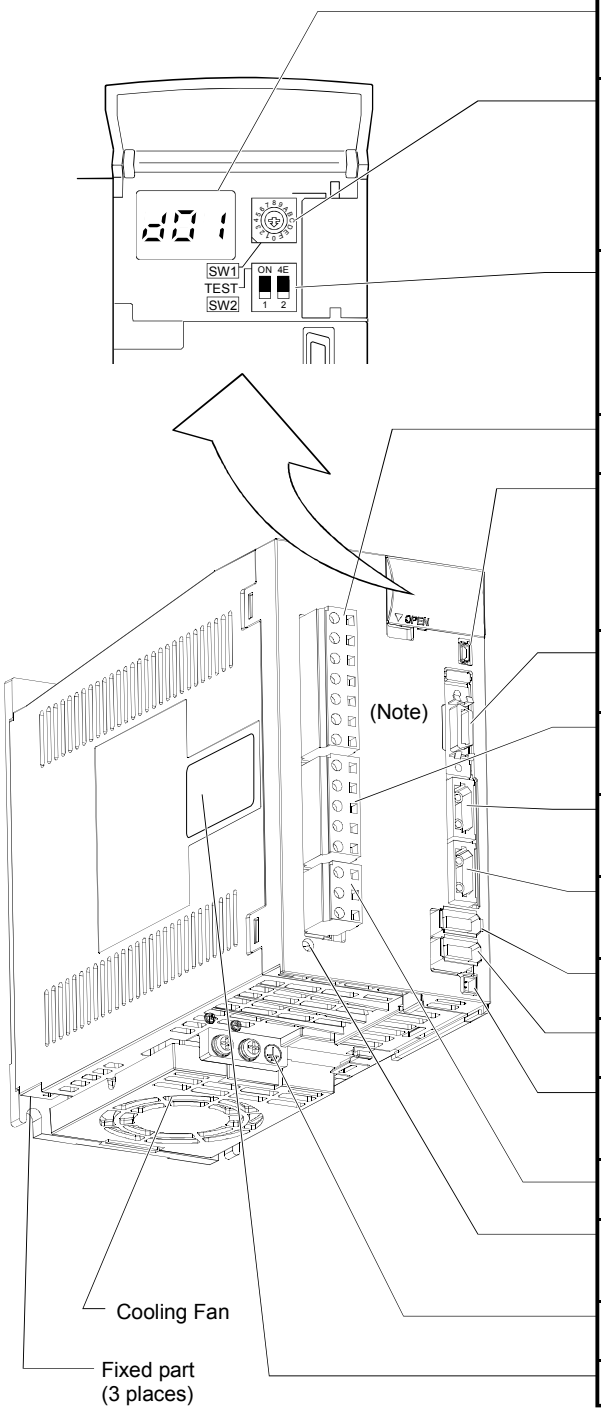

Name/Application	Detailed explanation
Display The 3-digit, seven-segment LED shows the servo status and alarm number.	Refer to the MR-J3-□B Servo Amplifier Instruction Manual.
Rotary axis setting switch (SW1) SW1 Used to set the axis No. of servo amplifier.	
Test operation select switch (SW2-1) Used to perform the test operation mode by using MR Configurator. SW2 1 2 Spare (Be sure to set to the "Down" position).	
Main circuit power supply connector (CNP1) Connect the input power supply.	Section 4.2
USB communication connector (CN5) Used to connect the personal computer.	Refer to the MR-J3-□B Servo Amplifier Instruction Manual.
I/O signal connector (CN3) Used to connect digital I/O signals. More over an analog monitor is output.	Section 4.3
Control circuit connector (CNP2) Connect the control circuit power supply/regenerative option.	Section 4.2
SSCNETⅢ cable connector (CN1A) Used to connect the servo system controller or the front axis servo amplifier.	Refer to the MR-J3-□B Servo Amplifier Instruction Manual.
SSCNETⅢ cable connector (CN1B) Used to connect the rear axis servo amplifier. For the final axis, puts a cap.	
Connector for thermistor (CN2) Used to connect the thermistor of the linear servo motor.	Chapter 2
Encoder connector (CN2L) Used to connect the linear encoder.	Chapter 3
Battery connector (CN4) Used to connect the battery for absolute position data backup.	
Servo motor power connector (CNP3) Connect the servo motor.	Chapter 2 Section 4.2
Charge lamp Lit to indicate that the main circuit is charged. While this lamp is lit, do not reconnect the cables.	
Protective earth (PE) terminal (⏚) Ground terminal.	Section 4.2
Rating plate	Section 1.4

Note. Connectors (CNP1, CNP2, and CNP3) and appearance of MR-J3-200B-RJ004 servo amplifier have been changed from April 2008 production. For existing servo amplifier, refer to appendix 5.

(3) MR-J3-350B-RJ004

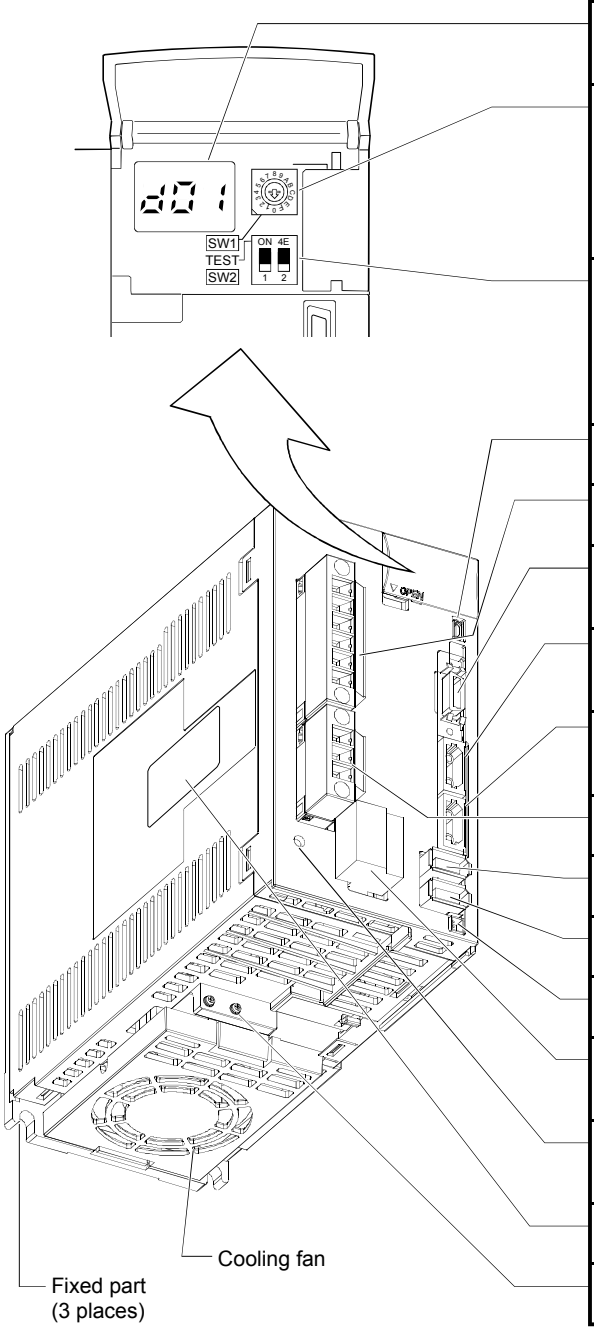

Name/Application	Detailed explanation
Display The 3-digit, seven-segment LED shows the servo status and alarm number.	Refer to the MR-J3-□B Servo Amplifier Instruction Manual.
Rotary axis setting switch (SW1) SW1 Used to set the axis No. of servo amplifier.	
Test operation select switch (SW2-1) Used to perform the test operation mode by using MR Configurator. SW2 1 2 Spare (Be sure to set to the "Down" position).	
USB communication connector (CN5) Used to connect the personal computer.	
Main circuit power supply connector (CNP1) Used to connect the input power supply.	Section 4.2
I/O signal connector (CN3) Used to connect digital I/O signals. More over an analog monitor is output.	Section 4.3
SSCNETⅢ cable connector (CN1A) Used to connect the servo system controller or the front axis servo amplifier.	Refer to the MR-J3-□B Servo Amplifier Instruction Manual.
SSCNETⅢ cable connector (CN1B) Used to connect the rear axis servo amplifier. For the final axis, puts a cap.	
Servo motor power supply connector (CNP3) Used to connect the servo motor.	Chapter 2 Section 4.2
Connector for thermistor (CN2) Used to connect the thermistor of the linear servo motor.	Chapter 2
Encoder connector (CN2L) Used to connect the linear encoder.	Chapter 3
Connector for manufacturer setting (CN4) Not used for this servo amplifier.	
Control circuit connector (CNP2) Connect the control circuit power supply/regenerative option.	Section 4.2
Charge lamp Lit to indicate that the main circuit is charged. While this lamp is lit, do not reconnect the cables.	
Rating plate	Section 1.4
Protective earth (PE) terminal (⏚) Ground terminal.	Section 4.2

(4) MR-J3-500B-RJ004

POINT

・The servo amplifier is shown without the front cover. For removal of the front cover, refer to section 1.7.2 of the MR-J3-□B Servo Amplifier Instruction Manual.

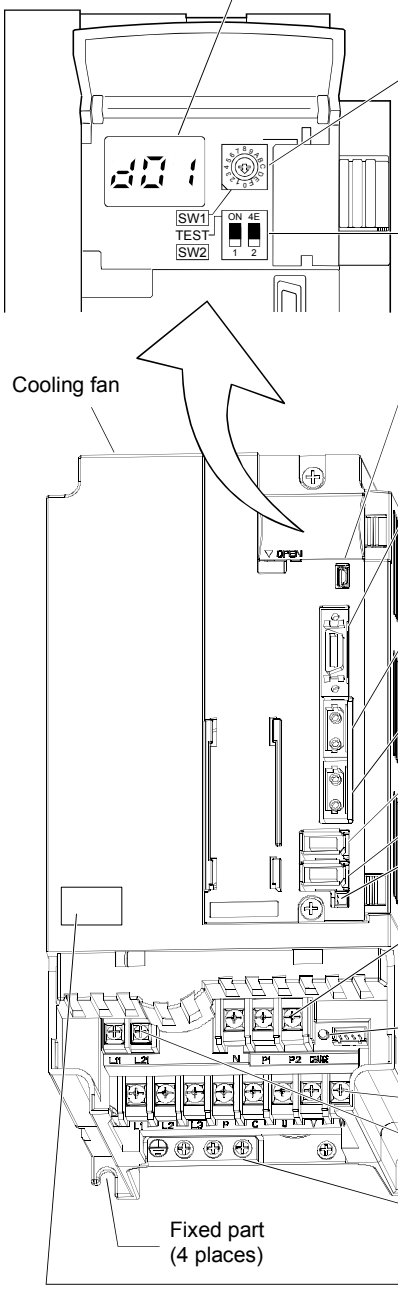

Name/Application	Detailed explanation
Display The 3-digit, seven-segment LED shows the servo status and alarm number.	Refer to the MR-J3-□B Servo Amplifier Instruction Manual.
Rotary axis setting switch (SW1) SW1 Used to set the axis No. of servo amplifier.	
SW2 Test operation select switch (SW2-1) Used to perform the test operation mode by using MR Configurator. Spare (Be sure to set to the "Down" position).	
USB communication connector (CN5) Used to connect the personal computer.	
I/O signal connector (CN3) Used to connect digital I/O signals. More over an analog monitor is output.	Section 4.3
SSCNETⅢ cable connector (CN1A) Used to connect the servo system controller or the front axis servo amplifier.	Refer to the MR-J3-□B Servo Amplifier Instruction Manual.
SSCNETⅢ cable connector (CN1B) Used to connect the rear axis servo amplifier. For the final axis, puts a cap.	
Connector for thermistor (CN2) Used to connect the thermistor of the linear servo motor.	Chapter 2
Encoder connector (CN2L) Used to connect the linear encoder.	Chapter 3
Connector for manufacturer setting (CN4) Not used for this servo amplifier.	
DC reactor terminal block (TE3) Used to connect the DC reactor.	Refer to the MR-J3-□B Servo Amplifier Instruction Manual.
Charge lamp Lit to indicate that the main circuit is charged. While this lamp is lit, do not reconnect the cables.	
Main circuit terminal block (TE1) Used to connect the input power supply and servo motor.	Chapter 2 Section 4.2
Control circuit terminal block (TE2) Used to connect the control circuit power supply.	
Protective earth (PE) terminal (⏚) Ground terminal.	
Rating plate	Section 1.4

(5) MR-J3-700B-RJ004

POINT

・The servo amplifier is shown without the front cover. For removal of the front cover, refer to section 1.7.2 of the MR-J3-□B Servo Amplifier Instruction Manual.

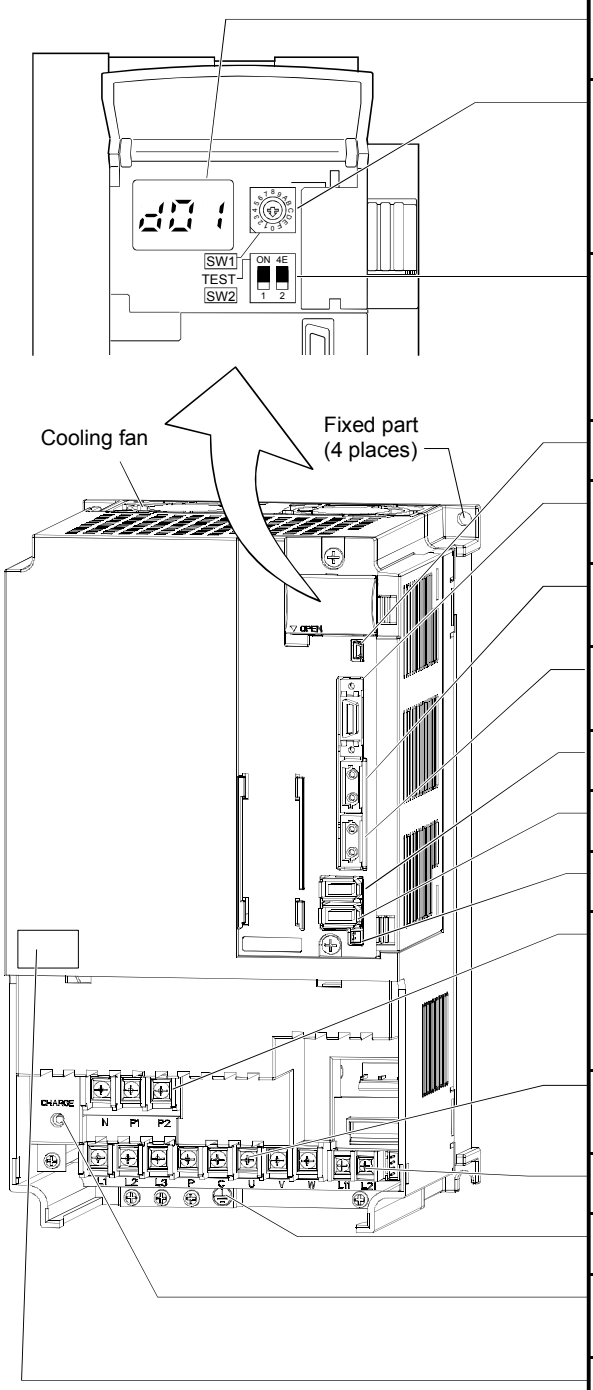

Name/Application	Detailed explanation
Display The 3-digit, seven-segment LED shows the servo status and alarm number.	Refer to the MR-J3-□B Servo Amplifier Instruction Manual.
Rotary axis setting switch (SW1) SW1 Used to set the axis No. of servo amplifier.	
Test operation select switch (SW2-1) Used to perform the test operation mode by using MR Configurator. SW2 1 2 Spare (Be sure to set to the "Down" position).	
USB communication connector (CN5) Connect the personal computer.	
I/O signal connector (CN3) Used to connect digital I/O signals. More over an analog monitor is output.	Section 4.3
SSCNETⅢ cable connector (CN1A) Used to connect the servo system controller or the front axis servo amplifier.	Refer to the MR-J3-□B Servo Amplifier Instruction Manual.
SSCNETⅢ cable connector (CN1B) Used to connect the rear axis servo amplifier. For the final axis, puts a cap.	
Connector for thermistor (CN2) Used to connect the thermistor of the linear servo motor.	Chapter 2
Encoder connector (CN2L) Used to connect the linear encoder.	Chapter 3
Connector for manufacturer setting (CN4) Not used for this servo amplifier.	
DC reactor terminal block (TE3) Used to connect the DC reactor.	Refer to the MR-J3-□B Servo Amplifier Instruction Manual.
Main circuit terminal block (TE1) Used to connect the input power supply and servo motor.	Chapter 2 Section 4.2
Control circuit terminal block (TE2) Used to connect the control circuit power supply.	
Protective earth (PE) terminal (⏚) Ground terminal.	
Charge lamp Lit to indicate that the main circuit is charged. While this lamp is lit, do not reconnect the cables.	
Rating plate	Section 1.4

(6) MR-J3-11KB-RJ004・MR-J3-15KB-RJ004・MR-J3-22KB4-RJ004

POINT

・The servo amplifier is shown without the front cover. For removal of the front cover, refer to section 1.7.2 of the MR-J3-□B Servo Amplifier Instruction Manual.

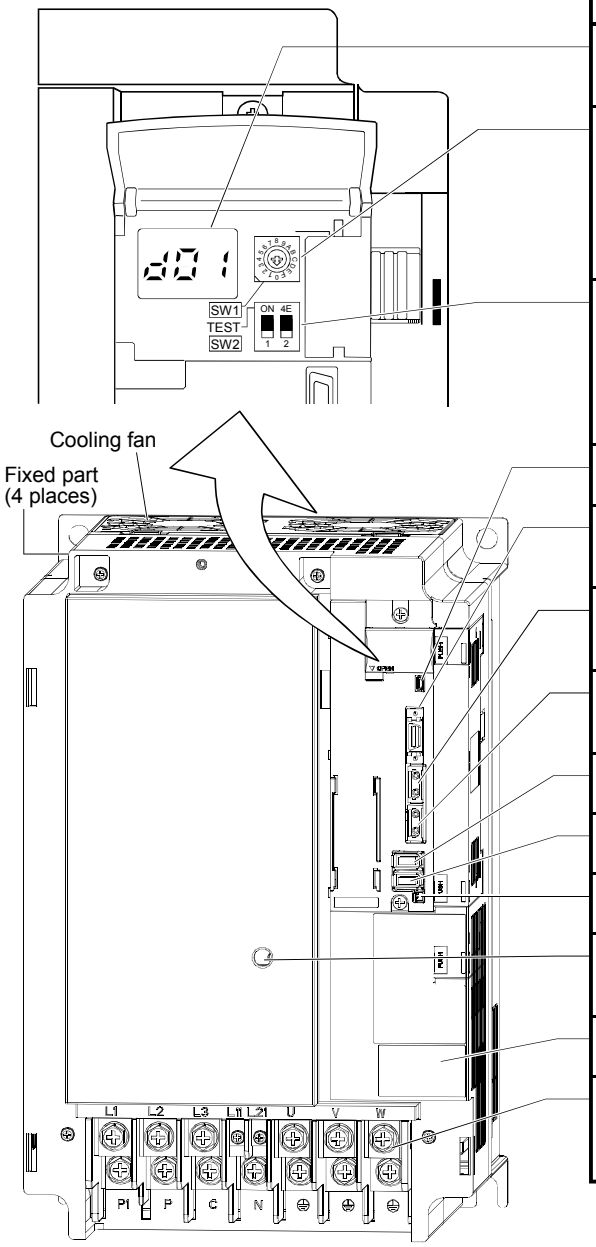

Name/Application	Detailed explanation
Display The 3-digit, seven-segment LED shows the servo status and alarm number.	Refer to the MR-J3-□B Servo Amplifier Instruction Manual.
Rotary axis setting switch (SW1) SW1 Used to set the axis No. of servo amplifier.	
Test operation select switch (SW2-1) Used to perform the test operation mode by using MR Configurator. SW 1 2 Spare (Be sure to set to the "Down" position).	
USB communication connector (CN5) Used to connect the personal computer.	
I/O signal connector (CN3) Used to connect digital I/O signals. More over an analog monitor is output.	Section 4.3
SSCNETⅢ cable connector (CN1A) Used to connect the servo system controller or the front axis servo amplifier.	Refer to the MR-J3-□B Servo Amplifier Instruction Manual.
SSCNETⅢ cable connector (CN1B) Used to connect the rear axis servo amplifier. For the final axis, puts a cap.	
Connector for thermistor (CN2) Used to connect the thermistor of the linear servo motor.	Chapter 2
Encoder connector (CN2L) Used to connect the linear encoder.	Chapter 3
Connector for manufacturer setting (CN4) Not used for this servo amplifier.	
Charge lamp Lit to indicate that the main circuit is charged. While this lamp is lit, do not reconnect the cables.	
Rating plate	Section 1.4
Main circuit terminal block control circuit protective earth (TE) Used to connect the input power supply, servo motor, regenerative option and ground.	Chapter 2 Section 4.2

1.7 Configuration including auxiliary equipment

POINT

・Equipment other than the servo amplifier and linear servo motor are optional or recommended products.

(1) MR-J3-100B-RJ004 or less

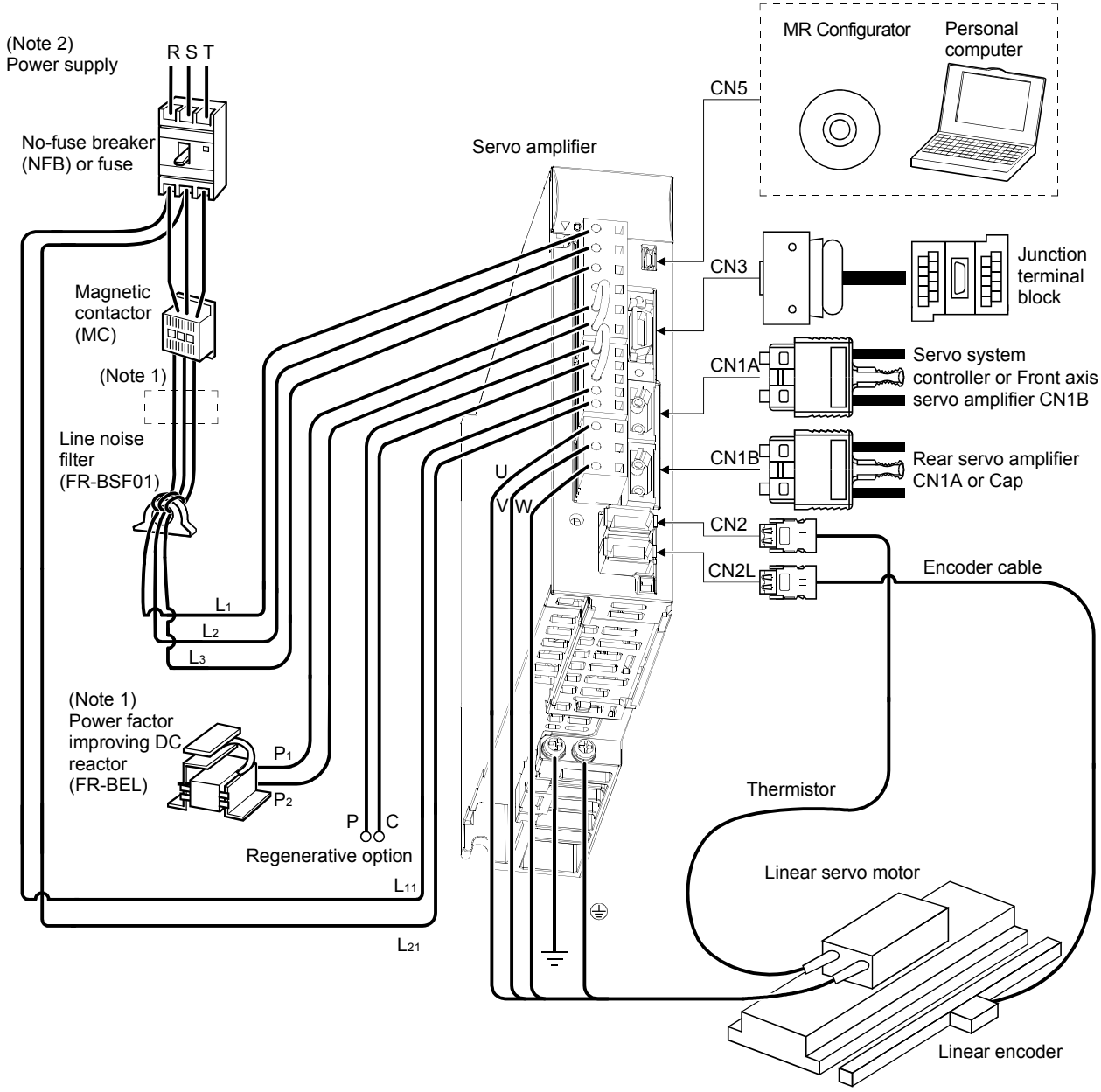

Note 1. The AC reactor can also be used. In this case, the DC reactor cannot be used. When not using DC reactor, short P_1 and P_2.

2. A 1-phase 200V to 230VAC power supply may be used with the servo amplifier of MR-J3-70B-RJ004 or less.
For 1-phase 200V to 230VAC, connect the power supply to L_1・L_2 and leave L_3 open. Refer to section 1.2 for the power supply specification.

(2) MR-J3-200B-RJ004

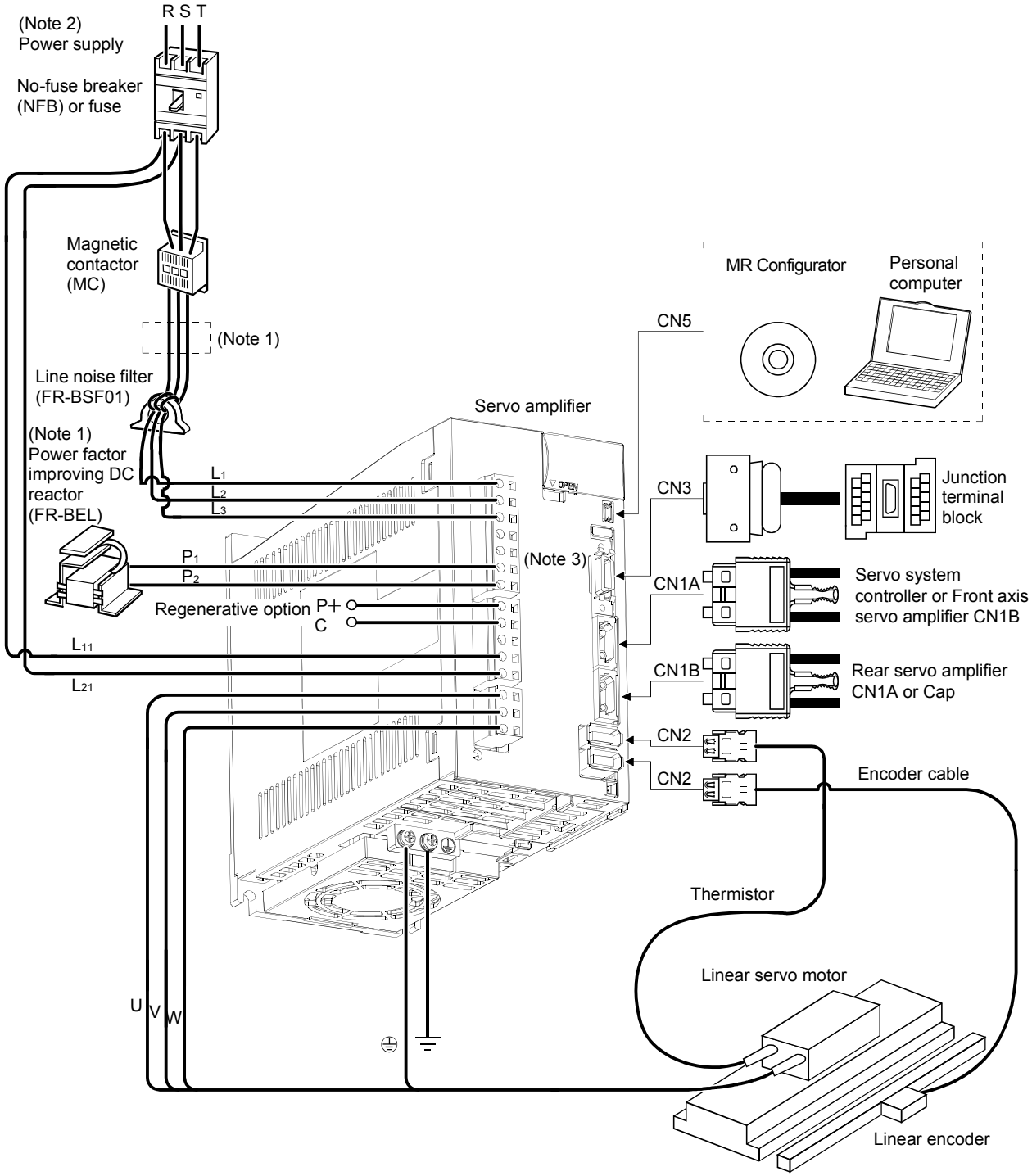

Note 1. The AC reactor can also be used. In this case, the DC reactor cannot be used. When not using DC reactor, short P_1 and P_2.
2. Refer to section 1.2 for the power supply specification.
3. Connectors (CNP1, CNP2, and CNP3) and appearance of MR-J3-200B-RJ004 servo amplifier have been changed from April 2008 production. For existing servo amplifier, refer to appendix 5.

(3) MR-J3-350B-RJ004

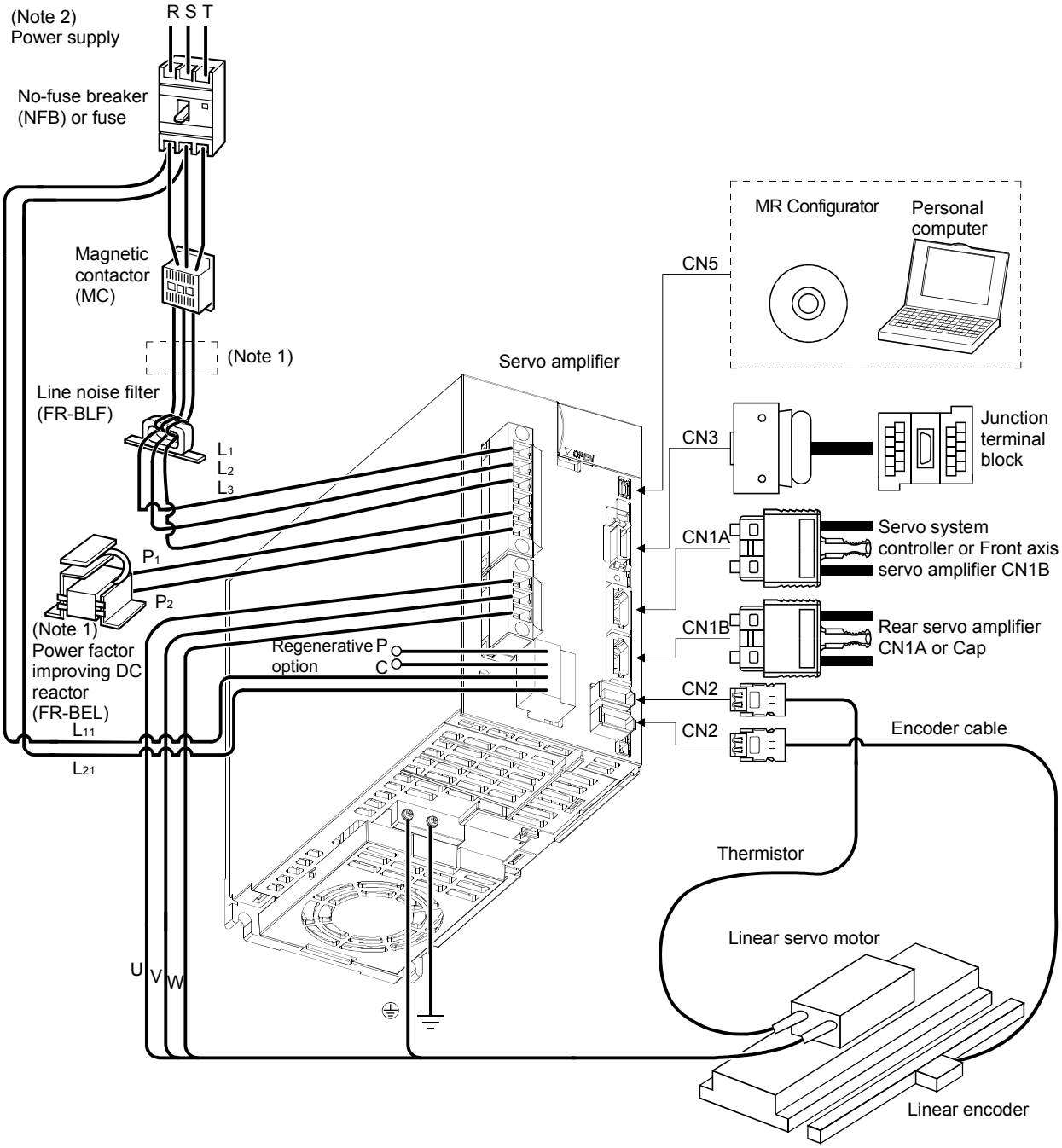

Note 1. The AC reactor can also be used. In this case, the DC reactor cannot be used. When not using DC reactor, short P_1 and P_2.
2. Refer to section 1.2 for the power supply specification.

(4) MR-J3-500B-RJ004

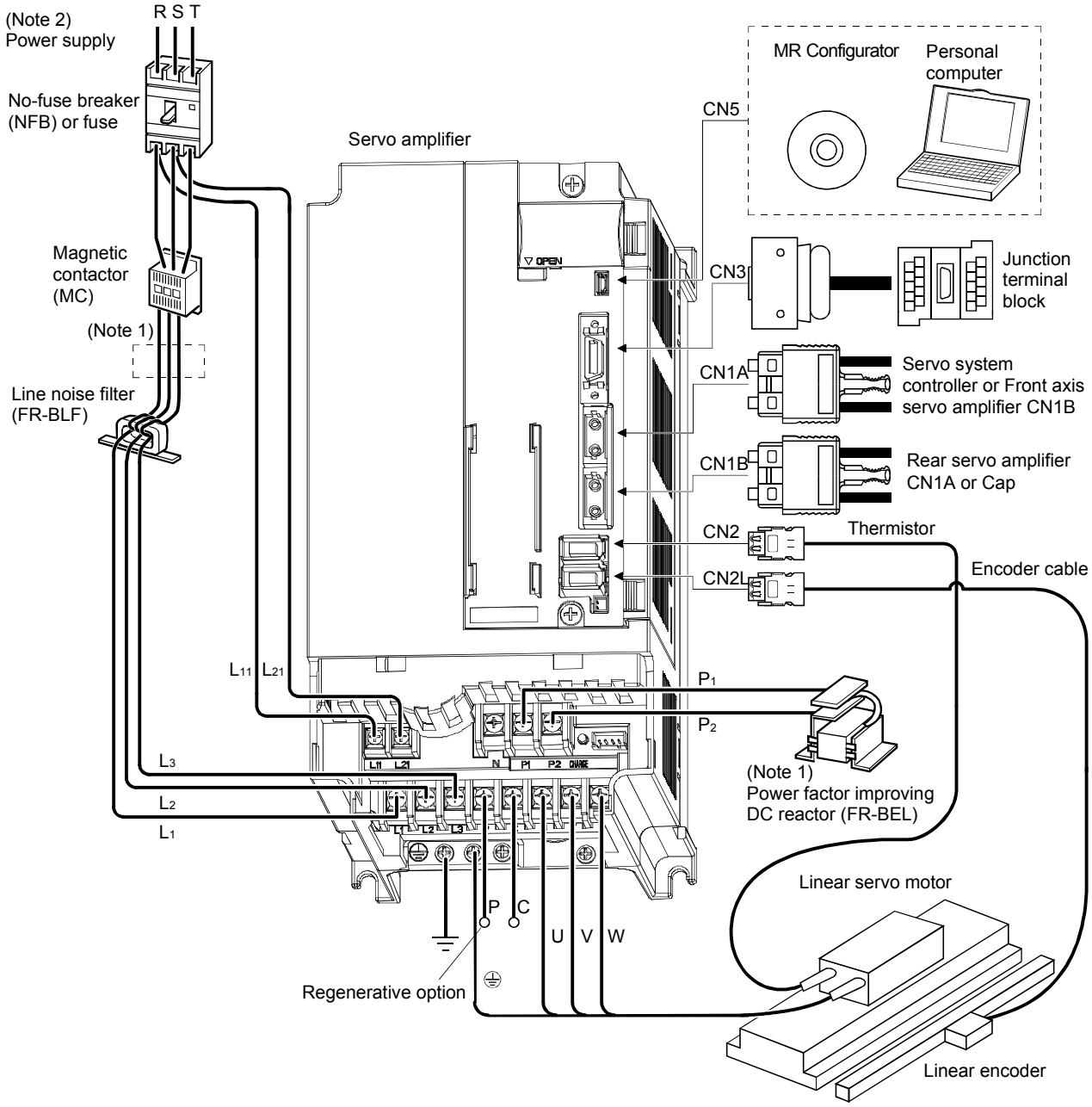

Note 1. The AC reactor can also be used. In this case, the DC reactor cannot be used. When not using DC reactor, short P_1 and P_2.
2. Refer to section 1.2 for the power supply specification.

(5) MR-J3-700B-RJ004

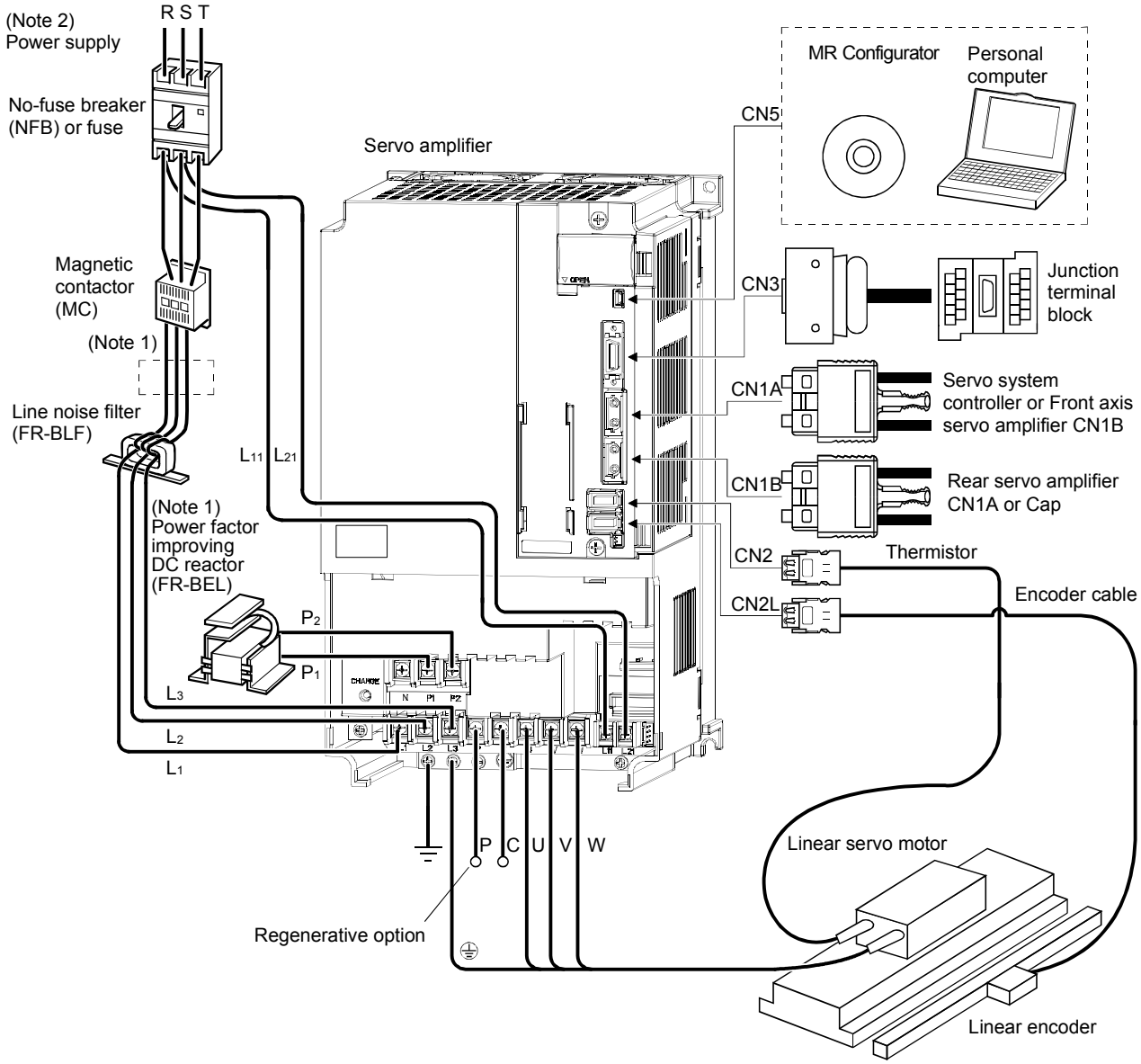

Note 1. The AC reactor can also be used. In this case, the DC reactor cannot be used. When not using DC reactor, short P_1 and P_2.
2. Refer to section 1.2 for the power supply specification.

(6) MR-J3-11KB-RJ004・MR-J3-15KB-RJ004・MR-J3-22KB4-RJ004

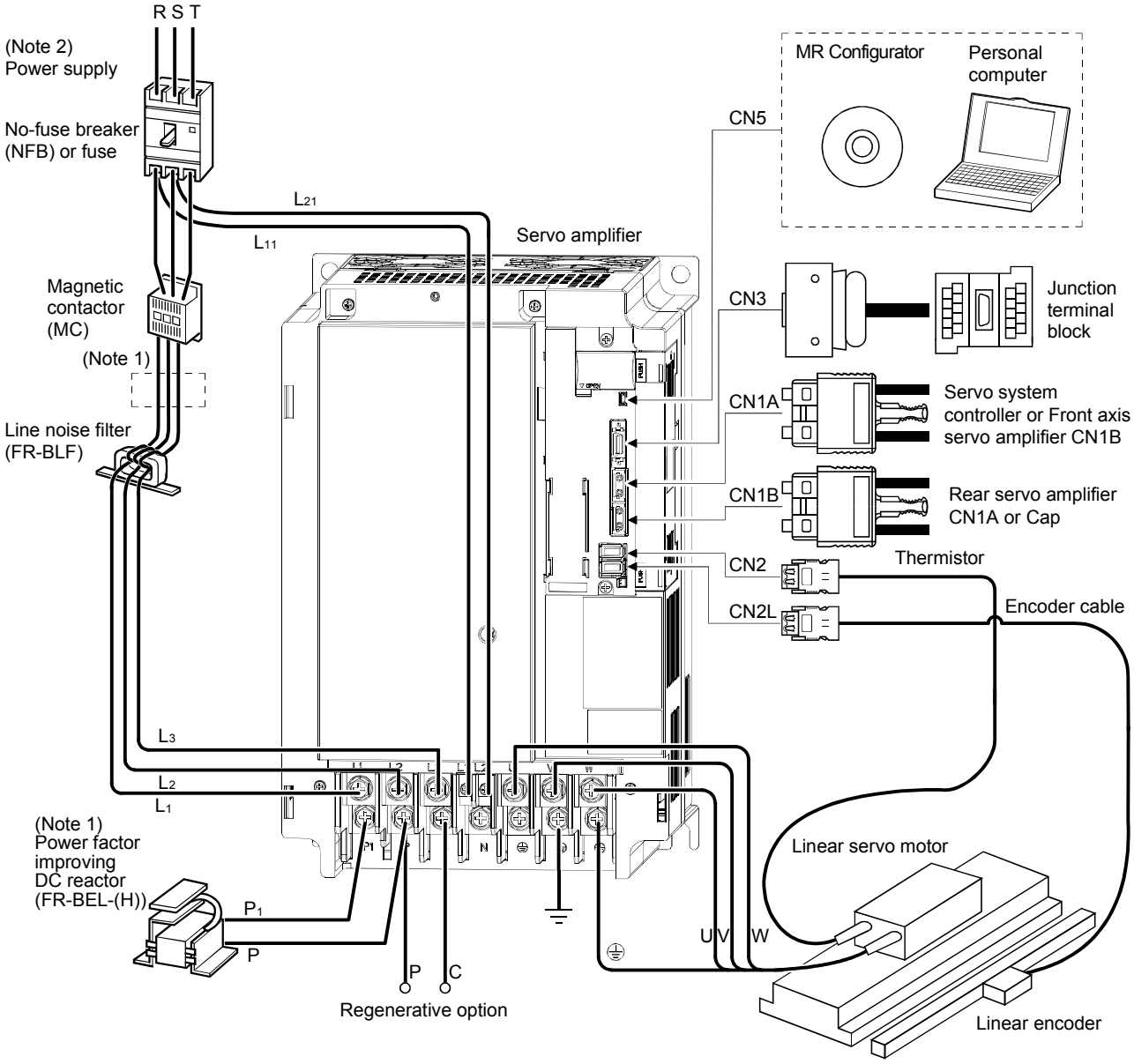

Note 1. The AC reactor can also be used. In this case, the DC reactor cannot be used. When not using DC reactor, short P_1 and P_2.
2. Refer to section 1.2 for the power supply specification.

MEMO

2. LINEAR SERVO MOTOR

The secondary side of the linear servo motor contains a strong permanent magnet. The wrong handling may cause serious accidents, which is extremely dangerous. Please read this chapter carefully beforehand and use it correctly.

2.1 Handling

2.1.1 General instructions

⚠ WARNING	・The linear servo motor uses a strong magnet on the secondary side. Therefore, not only the linear servo motor installation operators but also the machine operators must use abundance of caution. For example, one who uses a medical device like a pacemaker must keep away from the machine. ・The permanent magnet on the secondary side makes the magnetic bodies generate suction. Use caution with accidents so as not to get your hand stuck. ・The performance is not guaranteed if the specified servo amplifier and linear servo motor are not combined. If used with unspecified combination, the servo amplifier or linear servo motor may be damaged. Depending on the case, it can be out of control and operate unexpectedly, resulting in extremely dangerous condition.

⚠ CAUTION	・The linear servo motor installation operators and machine operators must not work wearing electronic devices (watch, calculator, personal computer, etc.) and magnetic recording media (IC card, magnetic card, floppy disc, etc.) and must not bring them around a magnetic. The magnetic influence may cause the operation failure or malfunction. ・The protection method of the linear servo motor is IP00. Take necessary measures against dust, oil, etc. (Refer to section 2.1.2 Installation direction.) ・When the linear servo motor is damaged, it must be replaced. Contact Mitsubishi Electric System & Service Co., Ltd. ・When the protective function is operated, turn off the power immediately and eliminate its cause, and then turn it on again. If the linear servo motor is continued operating without eliminating the cause, it may run unexpectedly and results in a damage and injury. ・Take safety measures, e.g. provide covers, to prevent accidental contact of hands and parts (cables, etc.) with the servo amplifier heat sink, regenerative resistor, linear servo motor, etc. since they may be hot while power is on or for some time after power-off. Their temperatures may be high and you may get burnt or a parts may damaged. ・The primary side (coil) and secondary side (magnet) may be damaged by a fall or shock.

2.1.2 Instructions on design

⚠ CAUTION	・The dynamic brake can be applied to the servo amplifier, but the coasting distance becomes longer when the moving body is heavy or when the speed is high. It may result in crashing into the stroke edge, which is highly dangerous. Install the anti-crash mechanism such as an air brake or an electric/mechanical stopper such as a shock absorber to reduce the shock of movable parts. (No linear servo motor with an electromagnetic brake is available.) ・The magnetic suction power acting between the primary side (coil) and the secondary (magnet) is always acting even when the motor power is not turned on. Because of this, the machine must be designed to be rigid enough to resist the magnetic suction power and maintain the accuracy. ・The running load by friction increases in proportion to the increase of the magnetic suction power, so the design must be made to decrease as much friction as possible, for example, by mounting guides with high accuracy. ・Do not use for vertical motion applications since magnetic poles cannot be detected with a vertical application. ・Install the linear servo motor the way in which the thrust acts on the gravity center of the movable part. When the thrust does not act on the gravity center of the movable part, the moment is generated. ・Design the mounting dimensions to be satisfied for the primary side (coil) and secondary side (magnet). ・The cables such as power cables deriving from the primary side (coil) cannot stand the long-term flexing action. Avoid the flexing action by fixing to the movable part, etc. Also, use the cable that stands the long-term flexing action for the wiring to the servo amplifier. ・Magnetic chips such as iron fragments can be attached to the permanent magnet on the secondary side, which may cause a malfunction. In the environment like this, take measures against the attachment and entry of magnetic chips. ・When the linear servo motor is operated over a long term under the condition where water for cutting or lubrication oil is splashed or where oil mist or dew condensation occurs due to supercooling or high humidity, insulation deterioration or other failures may be caused. Prevent the linear servo motor from oil and dust with a cover and take measures against dew condensation. ・More careful measures against oil and dust must be taken for the linear encoder than the linear servo motor. For details, please contact the linear encoder manufacturer individually. ・The moving direction of the linear servo motor and linear encoder must be matched. Otherwise, the motor may run unexpectedly. ・When two or more secondary side (magnet) is mounted, set the mounting screw accumulative pitch tolerance within ±0.2mm. Clearance may be left between the secondary sides (magnets) depending on the mounting method and the numbers. ・Do not hit the primary side (coil) on the stopper. The primary side may be damaged. Design the machine so that the stopper is hit on the top table attached to the primary side (coil).

POINT

- To execute the high accuracy positioning, ensure as much rigidity of machine as possible and make the machine resonance point higher.
- Make the moving parts as light as possible and make the base parts heavier and sturdier.
- As the operation and accuracy of machine could have an adverse effect, design it in order to make the thrust center of the linear servo motor closer to a moving body's gravity center.
- When the mounting rigidity of the linear encoder is not enough, machine vibration, etc. affect the feedback signal, and the desired performance may not be satisfied. As it is also the same case when the linear encoder is susceptible to electric noise, set up and mount the linear encoder so that it is affected by as little vibration and noise as possible.
- Establish the structure to sustain the high-speed and the high acceleration and deceleration.

2.1.3 Instructions on installation operation

⚠ WARNING

- Under the packaged condition (cardboard) delivered from our company, the magnet on the secondary side does not have a serious effect on the outside. Before mounting to the machine, however, magnetic bodies (including tools) must be kept away from the secondary side (magnetic). The secondary side (magnetic) can have as double suction power as mounted normally, which may cause a serious injury. To avoid this, pay full attention to the ambience of workplace.

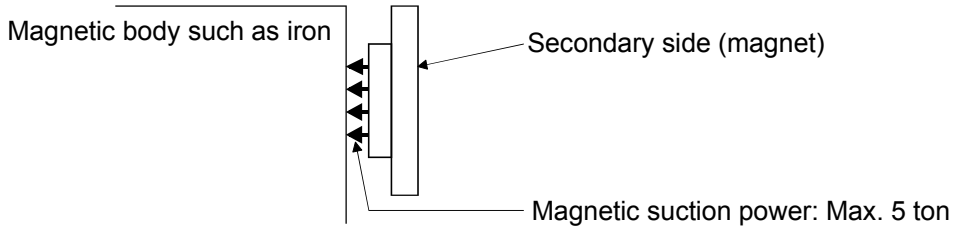

- The permanent magnet on the secondary side makes the magnetic bodies generate suction, which may cause troubles such as having hands pinched, etc. For the installation of the linear servo motor and the work around it, be sure to use nonmagnetic tools. These are required for the improvement of workability and safety ensuring. Use special caution with mounting the primary side (coil) after the secondary side (magnet) has mounted. Use the screw which strength must be a high tensile strength steel level of SCM435 for its material and the lower yield point 900 [N/mm^2] or more. (Example) Explosion-proof beryllium copper alloy safety tools: Manufactured by NGK Insulators, Ltd.

⚠ CAUTION

- Do not install the servo motor, linear servo motor and regenerative resistor on or near combustibles. Otherwise a fire may cause.
- Securely attach the linear servo motor to the machine. If attach insecurely, it may come off during operation.
- Install the servo amplifier in a load-bearing place in accordance with the Instruction Manual.

⚠ CAUTION	・Do not subject the servo amplifier and linear servo motor to drop impact or shock loads as they are precision equipment. ・Do not install or operate a faulty servo amplifier and linear servo motor. ・Use the equipment within the specified environmental condition range. (For the environmental condition, refer to section 1.2.) ・Tap holes on the linear servo motor are for machine installation. Do not use for other purposes. ・Do not touch the linear servo motor with wet hands. ・For installation, use all screw halls and tap holes prepared on the linear servo motor. ・When two or more secondary side (magnet) is mounted, set the mounting screw accumulative pitch tolerance within ± 0.2mm. Clearance may be left between the secondary sides (magnets) depending on the mounting method and the numbers.

2.1.4 Instructions on storage

⚠ CAUTION	・Do not climb or stand on servo equipment. Do not put heavy objects on equipment. ・Be sure to follow the storage conditions (ambient temperature and humidity, etc.). ・Store the product in the environment where the rain water is prevented from splashing on and dust, oil, and chemical materials from attaching on. ・Do not strike servo amplifier or linear servo motor. ・Do not modify the linear servo motor. ・When the equipment has been stored for an extended period of time, consult Mitsubishi.

2.2 Inspection items

⚠ WARNING	・Before starting maintenance and/or inspection, turn off the power and wait for 15 minutes or more until the charge lamp turns off. Then, confirm that the voltage between P(+) and N(−) is safe with a voltage tester and others. Otherwise, an electric shock may occur. In addition, always confirm from the front of the servo amplifier whether the charge lamp is off or not. ・Any person who is involved in inspection should be fully competent to do the work. Otherwise, you may get an electric shock. For repair and parts replacement, contact your safes representative.

POINT

・When executing a megger test (insulation resistance test), disconnect the servo amplifier. Otherwise, a fault may occur.
・Do not disassemble and/or repair the equipment on customer side.
・The molded resin of the linear servo motor may lose the color. Though a fault may not occur only for losing the color, make inspections.

It is not until the linear servo motor is mounted in equipment (built-in) that it has functions as motor. As the protection method is IP00, it is recommended to make inspections and clean periodically.

2.2.1 Inspections on primary side (coil)

(1) Attachment of water and oil

Check that the primary side (coil) and secondary side (magnet) have not got wet with water and oil. When the linear servo motor has got wet, the insulation on the primary side (coil) is deteriorated, which may cause failure. Make sure to establish the mechanical structure in which water and oil are not attached to the linear motor.

(2) Molded resin

Check for missing or cracks of the molded resin on the primary side (coil). As the insulation deterioration and such may cause failure when missing or cracks are found in the molded resin on the primary side (coil), replace the primary side (coil).

(3) Scratches of primary side (coil) facing secondary side (magnet)

Check the scratches of the primary side (coil) facing the secondary side (magnet). When the primary side (coil) facing the secondary side (magnet) has scratches, replace the primary side (coil). When a foreign matter is caught in the empty clearance between the primary side (coil) and the secondary side (magnet), a scratch occurs on the primary side (coil). In such case, take away the corresponding matter and establish the mechanical structure which does not catch such matters.

However, if the scratches of the primary side (coil) facing the secondary side (magnet) result in no more than the protective coating peeled off, they can be repaired.

(4) Loose mounting screws

Check for loose mounting screws on the primary side (coil). When the mounting screws on the primary side (coil) are loose, tighten the corresponding screws.

(5) Scratches and cracks of linear servo motor cables

Check for scratches and cracks of the linear servo motor cables. If the linear servo motor cables have any scratches or cracks, replace the corresponding cables. Especially when the cables are moved, make inspections periodically.

2.2.2 Inspections on secondary side (magnet)

(1) Attachment of water and oil

Check that the primary side (coil) and secondary side (magnet) have not got wet with water and oil. When the linear servo motor has got wet, the insulation on the primary side (coil) is deteriorated, which may cause failure. Make sure to establish the mechanical structure in which water and oil are not attached to the linear motor.

(2) Exposure and lift of magnet

Check for the exposure and lift of the magnet on the secondary side (magnet). If the magnet on the secondary side (magnet) is exposed or lifted, replace the secondary side (magnet) immediately.

(3) Molded resin

(a) Check for missing or cracks of the mold resin on the secondary side (magnet). (a) When missing or cracks are found in the molded resin on the secondary side (magnet), replace the secondary side (magnet).

(b) Check for the scratches of the molded resin on the secondary side (magnet). When the magnet is exposed by the scratches of the molded resin on the secondary side (magnet), replace the secondary side (magnet). When a foreign matter is caught in the empty clearance between the primary side (coil) and the secondary side (magnet), a scratch occurs on the secondary side (magnet). In such case, take away the corresponding matter and establish the mechanical structure which does not catch such matters.

(4) Loose mounting screws

Check for loose mounting screws on the secondary side (magnet). When the mounting screws on the secondary side (magnet) are loose, tighten the corresponding screws.

2.2.3 Inspections of linear encoder

The inspections of the linear encoder may be required. For the inspections of the linear encoder, contact the linear encoder manufacturer.

2.3 Replacement of linear servo motor on absolute position detection system

2.3.1 Replacement of primary side (coil) or secondary side (magnet)

After replacing the primary side (coil) or the secondary side (magnet), perform the magnetic pole detecting operation again.

2.3.2 Replacement of linear encoder

After replacing the linear encoder, perform the magnetic pole detecting operation again. When replacing the linear encoder, make sure to set a home position by controller.
The following indicates the procedures to check the mounting position.

(1) Checking mounting position of linear encoder

1) Before replacing the linear encoder, check the encoder information using the MR Configurator with the linear servo motor fixed at the specified position.

2) Replace the linear encoder so that the position gap should be ± 0.1 mm, comparing before and after the replacement.

3) After replacing the linear encoder, check the encoder information using the MR Configurator again with the linear servo motor fixed at the specified position.

4) Check that the value calculated from the difference of the encoder information (resolution unit) before and after the replacement of the linear encoder is under ± 0.1mm.

(2) Reading encoder information with MR Configurator

1) Select the "MR-J3-B Linear" from the system setting of MR Configurator.

2) Check that the personal computer is connected with the servo amplifier and select "Diagnostics" and then "Linear diagnostics".
The following window appears.

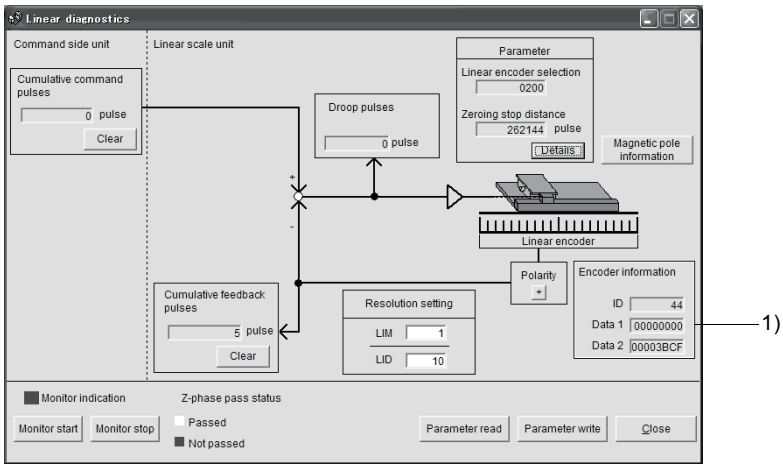

3) Data 1 (1) of the encoder information is read.

2.4 Instructions for discarding the linear servo motor

Demagnetize the secondary side (magnet) of the linear servo motor by heating over 300℃ (572℉), then discard it in accordance with Law for Promotion of Effective Utilization of Resources.

⚠ WARNING

- The linear servo motor uses a strong magnet on the secondary side. Therefore, not only the operators but also the people around the work place must use abundance of caution when the linear servo motor is disassembled or discarded. For example, one who uses a medical device like a pacemaker must keep away from the machine.
- The permanent magnet on the secondary side makes the magnetic bodies (primary side [coil] and secondary side [magnet]) generate suction.
  Use special caution with the handling of the secondary side which is demagnetized before/after disassembly.
- When the linear servo motor is disassembled or discarded, do not put magnetic bodies (including the primary side [coil], the other secondary sides [magnet] and tools) close to the secondary side (magnet). The secondary side (magnetic) can have as double suction power as mounted normally, which may cause a serious injury. In all cases, pay full attention to the ambience of workplace to avoid this.

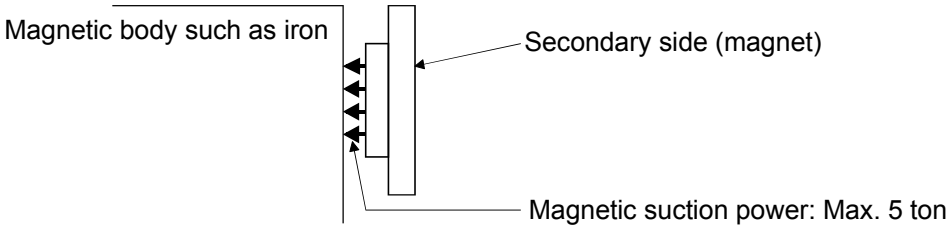

- A suction power is generated when magnetic bodies (including tools) are put near the permanent magnet on the secondary side. Be sure to use nonmagnetic tools for the disassembly and disposal of the linear servo motor or the work around it. These are required for the improvement of workability and safety ensuring.

⚠ CAUTION

- The personnel who work for the disassembly or disposal of the linear servo motor or those who are around the workplace must not work wearing electronic devices (watch, calculator, personal computer, etc.) and magnetic recording media (IC card, magnetic card, floppy disc, etc.) and must not bring them around the secondary side (magnet). Magnetic influence may cause the operation failure or malfunction.
- When the linear servo motor is disassembled or discarded, use cautions in order to avoid accidents so as not to get your hand stuck.
- Do not touch the secondary side after the demagnetization of the secondary side (magnet) by heating over 300℃ (572℉) until it becomes cool enough. Otherwise, you may get burnt.

2.5 LM-H2 series

2.5.1 Model code definition

(1) Primary side: coil

LM－H2P□□－□M－□

Series

Primary side (coil)

Symbol	Motor model
4SS0	LM-H2P1A-06M
1SS0	LM-H2P2A-12M
	LM-H2P2B-24M
	LM-H2P2C-36M
	LM-H2P2D-48M
	LM-H2P3A-24M
	LM-H2P3B-48M
	LM-H2P3C-72M
	LM-H2P3D-96M

Maximum speed: 2m/s

Rated thrust

Symbol	Rated thurst [N]
06	60
12	120
24	240
36	360
48	480
72	720
96	960

Length (nominal dimensions)

Symbol	Dimensions [mm]
A	128
B	224
C	320
D	416

Width (nominal dimensions)

Symbol	Dimensions [mm]
1	50
2	70
3	110

(2) Secondary side: magnet

LM－H2S□0－□－□

Series

Secondary side (magnetic)

Symbol	Motor model
4SS0	LM-H2S10-288
	LM-H2S10-384
	LM-H2S10-480
	LM-H2S10-768
1SS0	LM-H2S20-288
	LM-H2S20-384
	LM-H2S20-480
	LM-H2S20-768
	LM-H2S30-288
	LM-H2S30-384
	LM-H2S30-480
	LM-H2S30-768

Length (nominal dimensions)

Symbol	Dimensions [mm]
288	288
384	384
480	480
768	768

Width (nominal dimensions)

Symbol	Dimensions [mm]
1	42
2	65
3	105

2.5.2 LM-H2 series specification list

Linear servo motor (Primary side) LM-H2□				P1A-06M-4SS0	P2A-12M-1SS0	P2B-24M-1SS0	P2C-36M-1SS0	P2D-48M-1SS0	P3A-24M-1SS0	P3B-48M-1SS0	P3C-72M-1SS0	P3D-96M-1SS0
Linear servo motor (Secondary side) LM-H2□				S10-288-4SS0 S10-384-4SS0 S10-480-4SS0 S10-768-4SS0	S20-288-1SS0 S20-384-1SS0 S20-480-1SS0 S20-768-1SS0				S30-288-1SS0 S30-384-1SS0 S30-480-1SS0 S30-768-1SS0			
Servo amplifier model MR-J3-□				40B-RJ004 U500	40B-RJ004 U501	70B-RJ004 U502	200B-RJ004 U503	200B-RJ004 U504	70B-RJ004 U505	200B-RJ004 U506	350B-RJ004 U507	500B-RJ004 U508
Power supply capacity			[kVA]	0.9	0.9	1.3	3.5	3.5	1.3	3.5	5.5	7.5
Thrust	Rated (Note 2)		[N]	60	120	240	360	480	240	480	720	960
	Maximum		[N]	150	300	600	900	1200	600	1200	1800	2400
Maximum speed (Note 1)			[m/s]	2								
Magnetic suction			[N]	500	1000	1900	2700	3500	2000	3700	5300	7000
Recommended load mass ratio				Less than 30 times of mass of linear servo motor primary side								
Structure				Open (Protection type: IP00)								
Cooling system				Self-cooled								
Environ-mental conditions	Ambient temperature	In operation	[°C]	0 to +40 (non-freezing)								
			[°F]	32 to 104 (non-freezing)								
		In storage	[°C]	−15 to 70 (non-freezing)								
			[°F]	5 to 158 (non-freezing)								
	Ambient humidity	In operation		80%RH or less (non-condensing)								
		In storage		90%RH or less (non-condensing)								
	Ambience			Indoors (no direct sunlight) Free from corrosive gas, flammable gas, oil mist, dust and dirt.								
	Vibration		[m/s^2]	X, Y: 49 or less								
	Altitude			Max, 1000m above sea level								
Mass	Primary side (coil)		[kg]	0.9	1.4	2.5	3.6	4.7	2.4	4.3	6.2	8.1
			[lb]	1.98	3.09	5.51	7.94	10.4	5.29	9.48	13.7	17.9
	Secondary side (magnet)		[kg]	0.6 (288mm one magnet) 0.8 (384mm one magnet) 1.0 (480mm one magnet) 1.6 (768mm one magnet)	1.1 (288mm one magnet) 1.4 (384mm one magnet) 1.8 (480mm one magnet) 2.9 (768mm one magnet)				3.2 (288mm one magnet) 4.3 (384mm one magnet) 5.3 (480mm one magnet) 8.5 (768mm one magnet)			
			[lb]	1.32 (288mm one magnet) 1.76 (384mm one magnet) 2.21 (480mm one magnet) 3.53 (768mm one magnet)	2.43 (288mm one magnet) 3.09 (384mm one magnet) 3.97 (480mm one magnet) 6.39 (768mm one magnet)				7.06 (288mm one magnet) 9.48 (384mm one magnet) 11.7 (480mm one magnet) 18.7 (768mm one magnet)			

Note 1. Max. speed of the linear servo motor is smaller value of any max. speed of the linear servo motor and rated speed of the encoder.

2. Value in the case where the aluminum board of the following dimensions (L[mm] × W[mm] × H[mm]) is mounted on the primary side (coil). (Reference value)

LM-H2P1A-06M-4SS0: 192×225×30	LM-H2P3A-24M-1SS0: 192×495×30
LM-H2P2A-12M-1SS0: 192×315×30	LM-H2P3B-48M-1SS0: 336×495×40
LM-H2P2B-24M-1SS0: 336×315×30	LM-H2P3C-72M-1SS0: 480×495×40
LM-H2P2C-36M-1SS0: 480×315×40	LM-H2P3D-96M-1SS0: 624×495×40
LM-H2P2D-48M-1SS0: 624×315×40	

2.5.3 Thrust characteristics

When the input power supply specifications of the servo amplifier are 3-phase 200VAC or 1-phase 200VAC, the thrust characteristic is indicated by the continuous line.
The continuous/max. thrust and max. speed of the linear servo motor are in the case of the rated power voltage and frequency of the combined servo amplifier.

[LM-H2P1A-06M-4SS0]

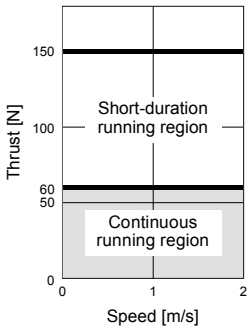

[LM-H2P2A-12M-1SS0]

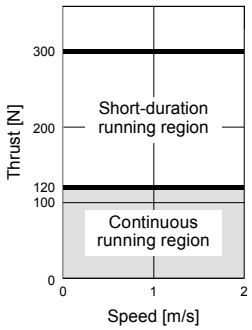

[LM-H2P2B-24M-1SS0]

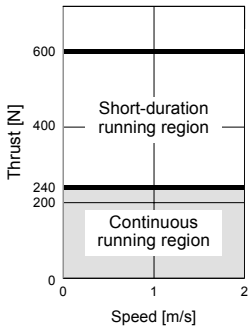

[LM-H2P2C-36M-1SS0]

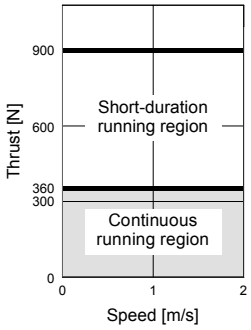

[LM-H2P2D-48M-1SS0]

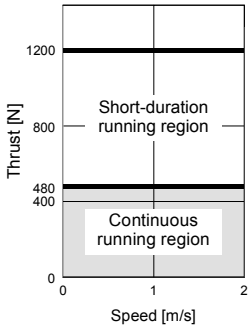

[LM-H2P3A-24M-1SS0]

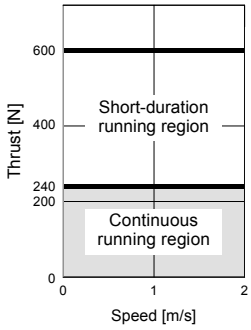

[LM-H2P3B-48M-1SS0]

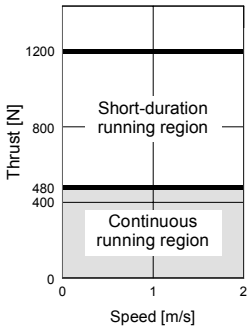

[LM-H2P3C-72M-1SS0]

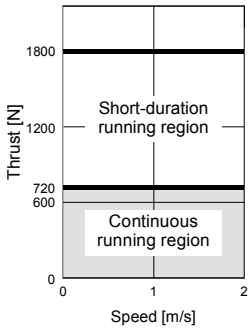

[LM-H2P3D-96M-1SS0]

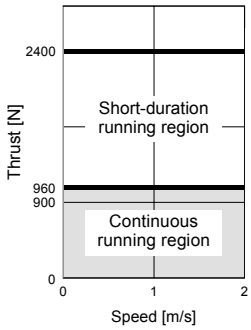

2.5.4 Installation

(1) Mounting dimensions

[Unit: mm]

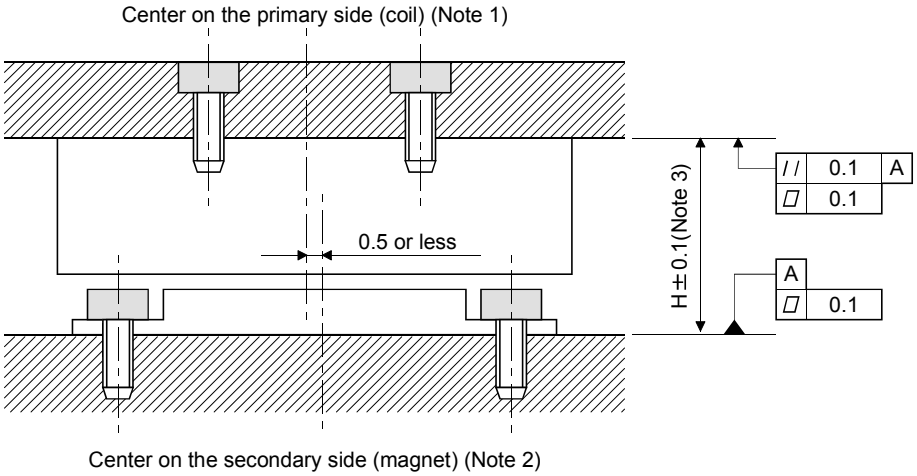

Note 1. Centers on the primary side (coil) are as follows.
LM-H2P1□ - □: Center mounting screw position
LM-H2P2□ - □: Center of mounting screw pitch
LM-H2P3□ - □: Center mounting screw position
2. Centers on the secondary side (magnet) is the center of mounting screw pitch.
3. H length indicates (height of primary side (coil)) + (height of secondary side (magnet)) + (length of empty clearance: 0.5mm).
LM-H2P1□ - □: H= 43.0mm
LM-H2P2□ - □: H= 43.0mm
LM-H2P3□ - □: H= 48.0mm

(2) Mounting the secondary side (magnet)

⚠ WARNING	・The linear servo motor uses a strong magnet on the secondary side. Therefore, not only the servo motor installation operators but also the machine operators must use abundance of caution. For example, one who uses a medical device like a pacemaker must keep away from the machine.

⚠ CAUTION	・When mounting the secondary side (magnet), use nonmagnetic tools. ・When the additional secondary side (magnet) is mounted after one has been already set, slide the additional secondary side (magnet) to mount in the specified position after setting in the position away from the one already mounted as shown in this section. ・When two or more secondary side (magnet) is mounted, set the mounting screw accumulative pitch tolerance within ± 0.2mm. Clearance may be left between the secondary sides (magnets) depending on the mounting method and the numbers.

When using multiple secondary sides (magnets), arrange the name plates attached to the products on the same side for keeping the layout of magnetic poles.

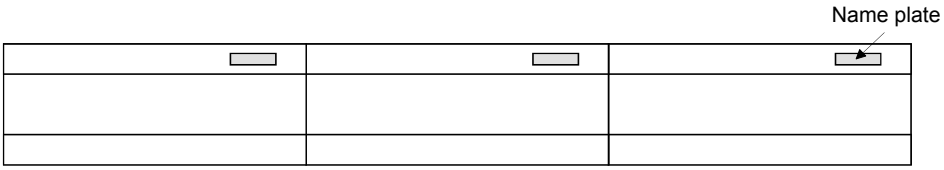

In order to decrease the clearance between the secondary sides (magnets), mount them with the following procedure.

Procedure 1. Securely fix with bolts the secondary side (magnet) to be a mounting standard.

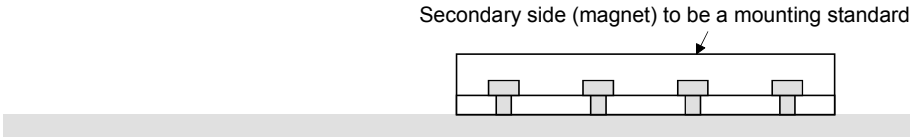

Procedure 2. Set the secondary side (magnet) on the mounting face and fix it with bolts as temporary joint.

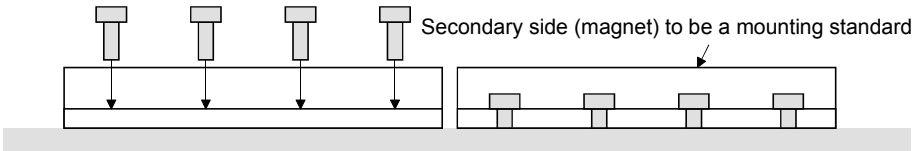

Procedure 3. Press the secondary side (magnet) fixed as temporary joint toward that to be a mounting standard.

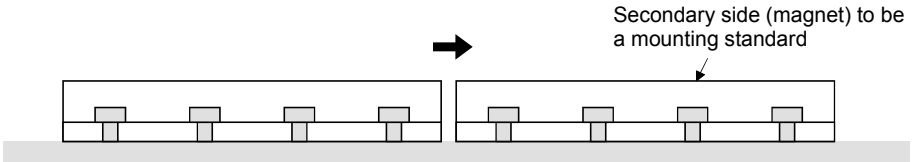

Procedure 4. Securely fix with bolts the secondary side (magnet) fixed as temporary joint.

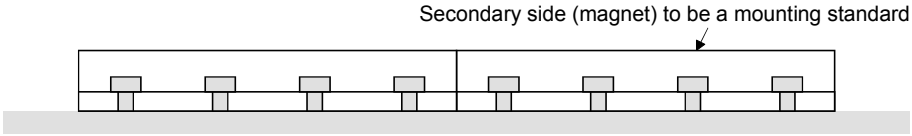

(3) Mounting the primary side (coil)

⚠ CAUTION	・To avoid the danger caused by suction, which is generated between the primary side (coil) and the secondary side (magnet) by the permanent magnet, it is recommended to mount the primary side (coil) in the position free from the secondary side (magnet) as shown in this section. ・When mounting the primary side (coil) over the secondary side (magnet) unavoidably, use the material handling equipment such as crane which is fully competent to sustain the load of suction, etc. ・When sliding the primary side (coil) to move over the secondary side (magnet) after setting, pay full attention to the suction generated.

Procedure 1. Mount a part of the secondary side (magnet).

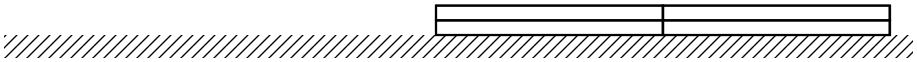

Procedure 2. Mount the primary side (coil) in the position free from the secondary side (magnet).

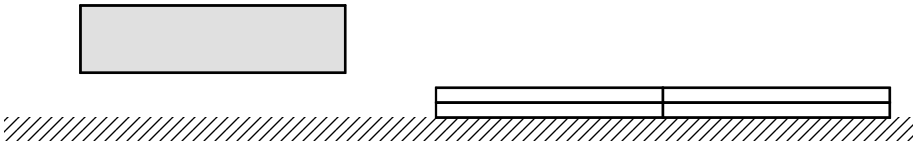

Procedure 3. Move the primary side (coil) over the secondary side (magnet) mounted.
Confirm that the primary side (coil) does not contact the secondary side (magnet).

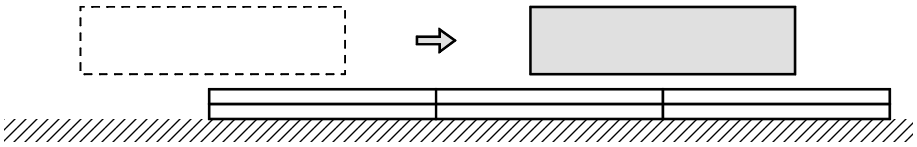

Procedure 4. Mount the rest of the secondary side (magnet).

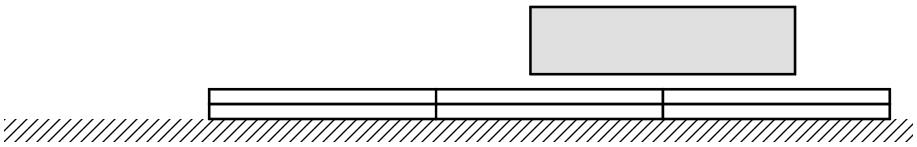

2.5.5 Outline drawings

(1) Primary side (coil)

(a) LM-H2P1A-06M-4SS0

[Unit: mm]

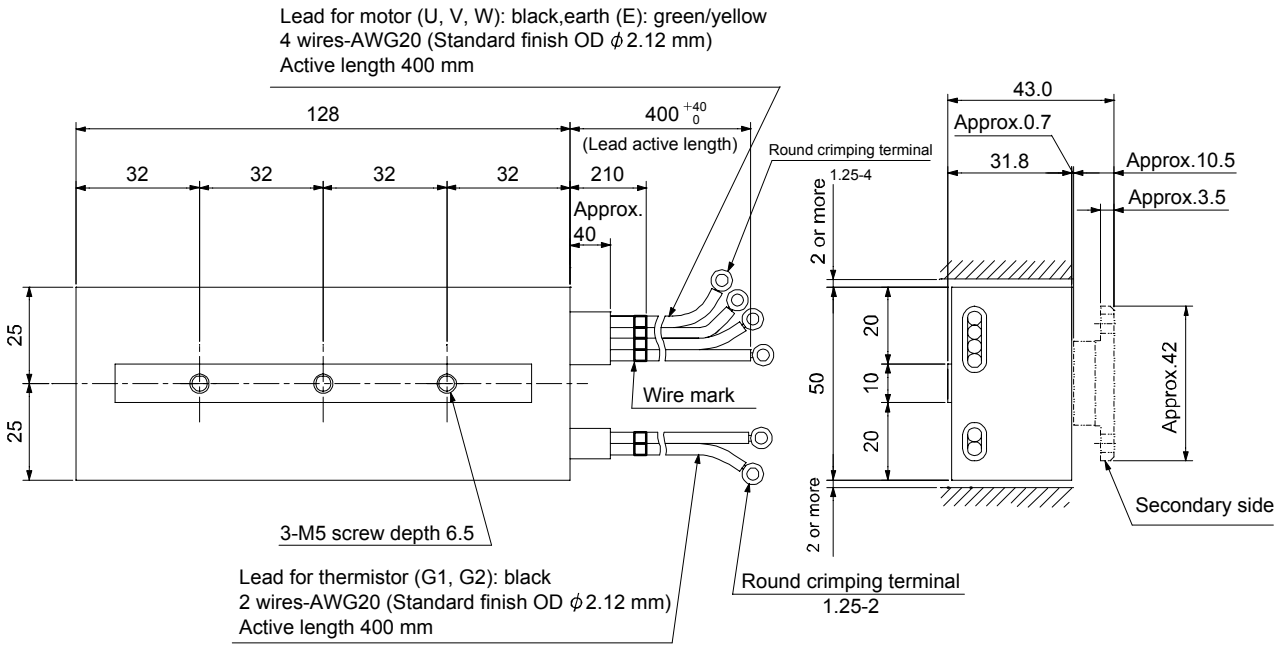

(b) LM-H2P2A-12M-1SS0・LM-H2P2B-24M-1SS0・LM-H2P2C-36M-1SS0・LM-H2P2D-48M-1SS0

[Unit: mm]

Model	Variable dimensions				Lead for motor	
	L	M	A	B	Size	Standard finish OD
LM-H2P2A-12M-1SS0	128	64	(32)	2×2	AWG20	ϕ2.12
LM-H2P2B-24M-1SS0	224	2×64(=128)	(64)	3×2	AWG16	ϕ2.7
LM-H2P2C-36M-1SS0	320	4×64(=256)	(32)	5×2		
LM-H2P2D-48M-1SS0	416	5×64(=320)	(64)	6×2		

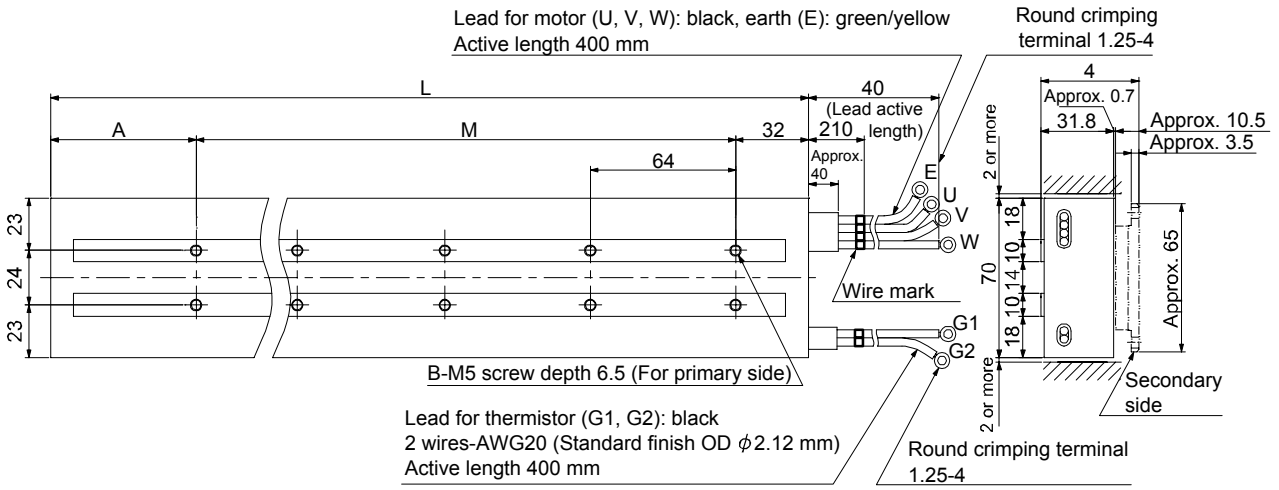

(c) LM-H2P3A-24M-1SS0・LM-H2P3B-48M-1SS0・LM-H2P3C-72M-1SS0・LM-H2P3D-96M-1SS0

[Unit: mm]

Model	Variable dimensions				Lead for motor	
	L	M	A	B	Size	Standard finish OD
LM-H2P3A-24M-1SS0	128	64	32	2×3	AWG20	ϕ2.12
LM-H2P3B-48M-1SS0	224	2×64(=128)	64	3×3	AWG14	ϕ3.12
LM-H2P3C-72M-1SS0	320	4×64(=256)	32	5×3		
LM-H2P3D-96M-1SS0	416	5×64(=320)	64	6×3		

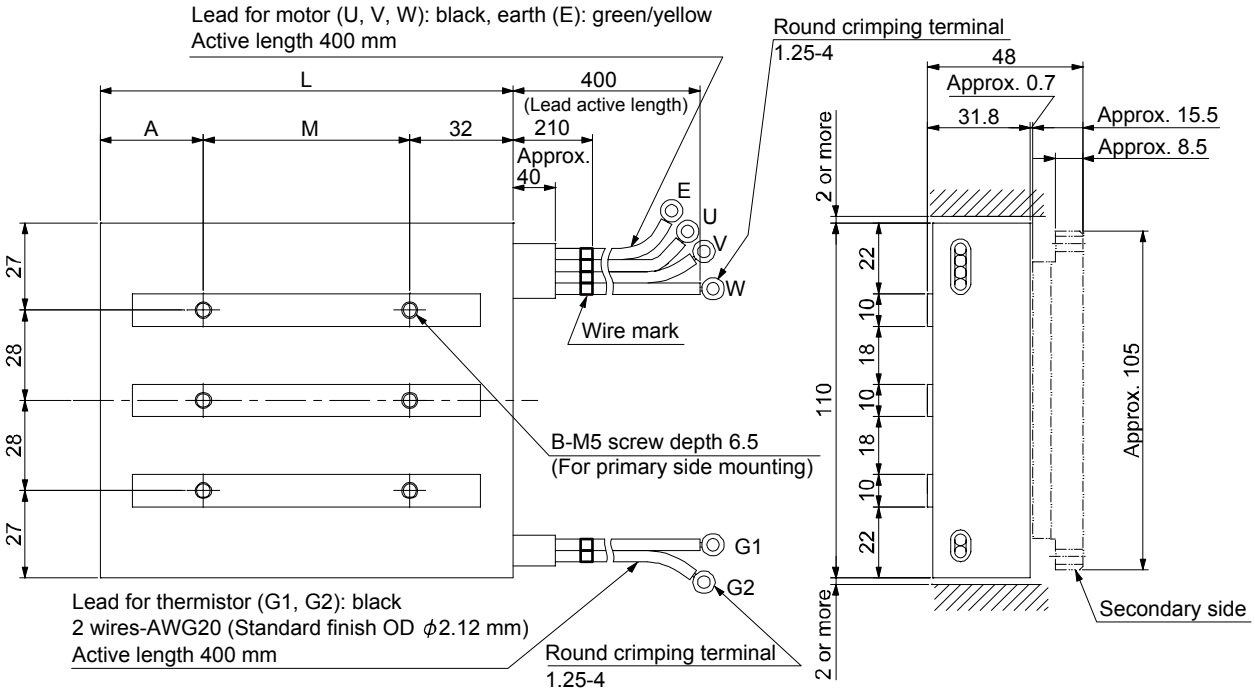

(2) Secondary side (magnet)

(a) LM-H2S10-□-1SS0

[Unit: mm]

Model	Variable dimensions		
	L	M	B
LM-H2S10-288	288	5×48(=240)	6×2
LM-H2S10-384	384	7×48(=336)	8×2
LM-H2S10-480	480	9×48(=432)	10×2
LM-H2S10-768	768	15×48(=720)	16×2

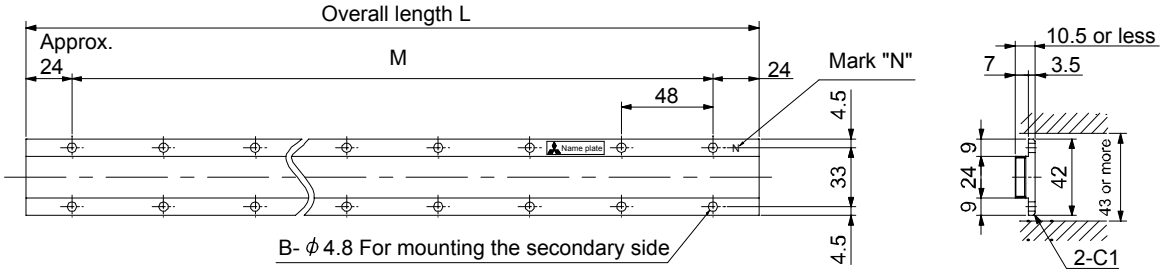

(b) LM-H2S20-□-1SS0

[Unit: mm]

Model	Variable dimensions		
	L	M	B
LM-H2S20-288	288	5×48(=240)	6×2
LM-H2S20-384	384	7×48(=336)	8×2
LM-H2S20-480	480	9×48(=432)	10×2
LM-H2S20-768	768	15×48(=720)	16×2

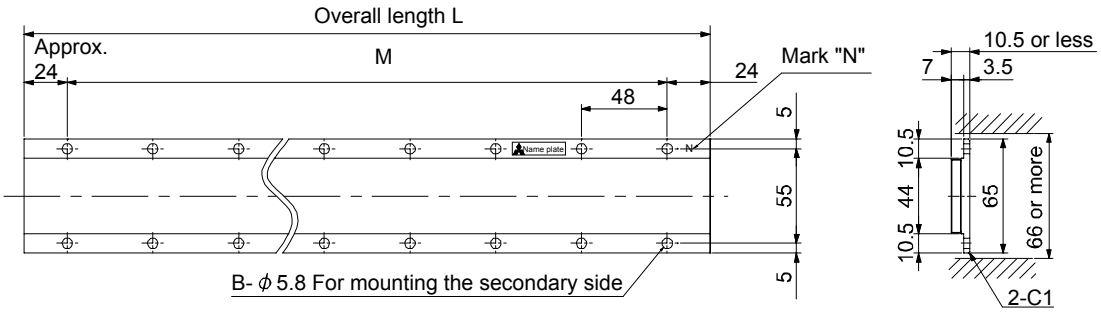

(c) LM-H2S30-□-1SS0

[Unit: mm]

Model	Variable dimensions		
	L	M	B
LM-H2S30-288	288	5×48(=240)	6×2
LM-H2S30-384	384	7×48(=336)	8×2
LM-H2S30-480	480	9×48(=432)	10×2
LM-H2S30-768	768	15×48(=720)	16×2

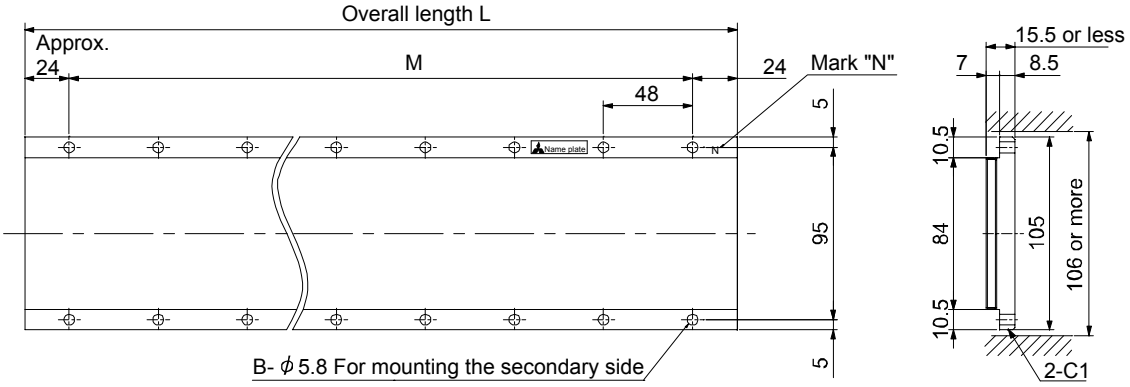

2.5.6 Connection of servo amplifier and linear servo motor

(1) Connection instructions

⚠ WARNING	・Insulate the connections of the power supply terminals to prevent an electric shock.

⚠ CAUTION	・Connect the wires to the correct phase terminals (U, V, W) of the servo amplifier and linear servo motor. Otherwise, the linear servo motor does not operate properly. ・Do not connect AC power supply directly to the linear servo motor. Otherwise, a fault may occur.

POINT

・Refer to section 11.1 for the selection of the encoder cable.

For grounding, connect the earth cable of the linear servo motor to the protective earth (PE) terminal of the servo amplifier and connect the ground cable of the servo amplifier to the earth via the protective earth of the control box. Do not connect them directly to the protective earth of the control panel.

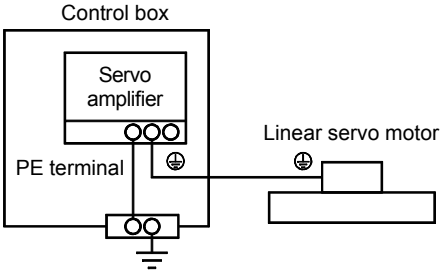

(2) Power supply cable wiring diagrams

Use the wires and connectors shown in the following figure. For the wires used for wiring, refer to section 4.2.1.

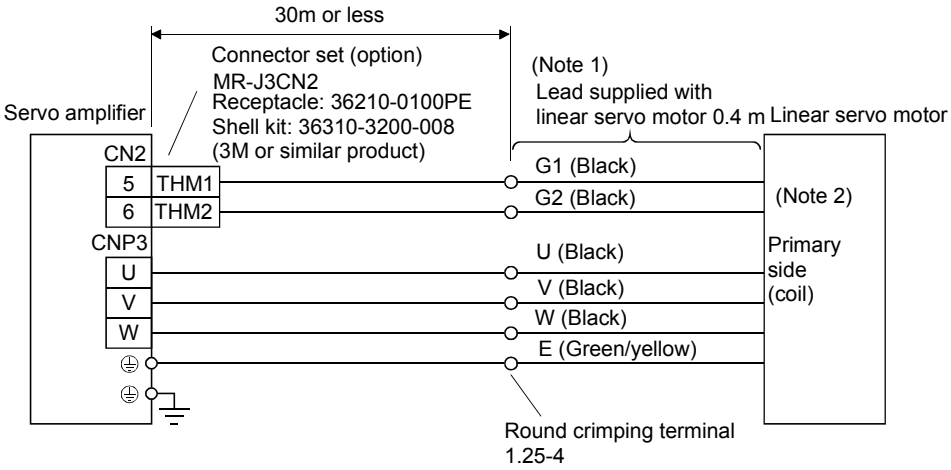

Note 1. The signal name (U, V, W, E, G1, G2) is attached on leads.
2. No polarity for the thermistors (G1 and G2)

2.6 LM-U2 series

2.6.1 Model code definition

(1) Medium thrust series

(a) Primary side: coil

LM－U2P□□－□M－□

Series

Primary side (coil)

Symbol	Motor model
0SS0	LM-U2PAB-05M
	LM-U2PAD-10M
	LM-U2PAF-15M
1SS0	LM-U2PBB-07M
	LM-U2PBD-15M
	LM-U2PBF-22M

Maximum speed: 2m/s

Rated thrust

Symbol	Rated thurst [N]
05	50
07	75
10	100
15	150
22	225

Length (nominal dimensions)

Symbol	Dimensions [mm]
B	130
D	250
F	370

Width (nominal dimensions)

Symbol	Dimensions [mm]
A	66.5
B	86.5

(b) Secondary side: magnet

LM－U2S□0－□－□

Series

Secondary side (magnetic)

Symbol	Motor model
0SS0	LM-U2SA0-240
	LM-U2SA0-300
	LM-U2SA0-420
1SS0	LM-U2SB0-240
	LM-U2SB0-300
	LM-U2SB0-420

Length (nominal dimensions)

Symbol	Dimensions [mm]
240	240
300	300
420	420

Width (nominal dimensions)

Symbol	Dimensions [mm]
A	62
B	82

(2) Large thrust series

(a) Primary side: coil

LM－U2P2□－□M

Series

Primary side (coil)

Maximum speed: 2m/s

Rated thrust

Symbol	Rated thurst [N]
40	400
60	600
80	800

Length (nominal dimensions)

Symbol	Dimensions [mm]
B	286
C	406
D	526

(b) Secondary side: magnet

LM－U2S20－□－2SS0

Series

Secondary side (magnetic)

Length (nominal dimensions)

Symbol	Dimensions [mm]
300	300
480	480

2.6.2 LM-U2 series specification list

Linear servo motor (Primary side) LM-U2□				PAB-05M-0SS0	PAD-10M-0SS0	PAF-15M-0SS0	PBB-07M-1SS0	PBD-15M-1SS0	PBF-22M-1SS0
Linear servo motor (Secondary side) LM-U2□				SA0-240-0SS0 SA0-300-0SS0 SA0-420-0SS0			SB0-240-1SS0 SB0-300-1SS0 SB0-420-1SS0		
Servo amplifier MR-J3-□				20B-RJ004U512	40B-RJ004U513	40B-RJ004U514	20B-RJ004U515	60B-RJ004U516	70B-RJ004U517
Power supply capacity			[kVA]	0.5	0.9	0.9	0.5	1.0	1.3
Thrust	Rated (Note 2)		[N]	50	100	150	75	150	225
	Maximum		[N]	150	300	450	225	450	675
Maximum speed (Note 1)			[m/s]	2.0					
Magnetic suction			[N]	0					
Recommended load mass ratio				Less than 30 times of mass of linear servo motor primary side					
Structure				Open (Protection type: IP00)					
Cooling system				Self-cooled					
Environ-mental conditions	Ambient temperature	In operation	[℃]	0 to +40 (non-freezing)					
			[°F]	32 to 104 (non-freezing)					
		In storage	[℃]	−15 to 70 (non-freezing)					
			[°F]	5 to 158 (non-freezing)					
	Ambient humidity	In operation		80%RH or less (non-condensing)					
		In storage		90%RH or less (non-condensing)					
	Ambience			Indoors (no direct sunlight) Free from corrosive gas, flammable gas, oil mist, dust and dirt.					
	Vibration		[m/s^2]	X, Y: 49 or less					
	Altitude			Max, 1000m above sea level					
Mass	Primary side (coil)		[kg]	0.3	0.6	0.8	0.4	0.8	1.1
			[lb]	0.66	1.32	1.76	0.88	1.76	2.43
	Secondary side (magnet)		[kg]	2.0(240mm One magnet) 2.5(300mm One magnet) 3.5(420mm One magnet)			2.6(240mm One magnet) 3.2(300mm One magnet) 4.5(420mm One magnet)		
			[lb]	4.41(240mm One magnet) 5.51(300mm One magnet) 7.72(420mm One magnet)			5.74(240mm One magnet) 7.06(300mm One magnet) 9.92(420mm One magnet)		

Linear servo motor (Primary side) LM-U2□				P2B-40M-2SS0	P2C-60M-2SS0	P2D-80M-2SS0
Linear servo motor (Secondary side) LM-U2□				S20-300-2SS0 S20-480-2SS0		
Servo amplifier MR-J3-□				200B-RJ004U509	350B-RJ004U510	500B-RJ004U511
Power supply capacity			[kVA]	3.5	5.5	7.5
Thrust	Rated (Note 2)		[N]	400	600	800
	Maximum		[N]	1600	2400	3200
Maximum speed (Note 1)			[m/s]	2		
Magnetic suction			[N]	0		
Recommended load mass ratio				Less than 30 times of mass of linear servo motor primary side		
Structure				Open (Protection type: IP00)		
Cooling system				Self-cooled		
Environ-mental conditions	Ambient temperature	In operation	[℃]	0 to +40 (non-freezing)		
			[°F]	32 to 104 (non-freezing)		
		In storage	[℃]	−15 to 70 (non-freezing)		
			[°F]	5 to 158 (non-freezing)		
	Ambient humidity	In operation		80%RH or less (non-condensing)		
		In storage		90%RH or less (non-condensing)		
	Ambience			Indoors (no direct sunlight) Free from corrosive gas, flammable gas, oil mist, dust and dirt.		
	Vibration		[m/s^2]	X, Y: 49 or less		
	Altitude			Max, 1000m above sea level		
Mass	Primary side (coil)		[kg]	2.9	4.2	5.5
			[lb]	6.39	9.26	12.1
	Secondary side (magnet)		[kg]	9.6 (300mm One magnet) 15.3 (480mm One magnet)		
			[lb]	21.2 (300mm One magnet) 3.38 (480mm One magnet)		

Note 1. Max. speed of the linear servo motor is smaller value of any max. speed of the linear servo motor and rated speed of the encoder.

2. Value in the case where the aluminum board of the following dimensions (L[mm] × W[mm] × H[mm]) is mounted on the primary side (coil). (Reference value)

LM-U2PAB-05M-0SS0: 300×400×15
LM-U2PAD-10M-0SS0: 400×500×15
LM-U2PAF-15M-0SS0: 500×600×15
LM-U2PBB-07M-1SS0: 300×400×15
LM-U2PBD-15M-1SS0: 400×500×15
LM-U2PBF-22M-1SS0: 500×600×15
LM-U2P2B-40M-2SS0: 900×800×12
LM-U2P2C-60M-2SS0: 900×800×12
LM-U2P2D-80M-2SS0: 990×800×12

2.6.3 Thrust characteristics

When the input power supply specifications of the servo amplifier are 3-phase 200VAC or 1-phase 230VAC, the thrust characteristic is indicated by the continuous line.
The continuous/max. thrust and max. speed of the linear servo motor are in the case of the rated power voltage and frequency of the combined servo amplifier.

[LM-U2PAB-05M-0SS0]

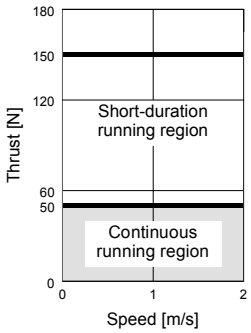

[LM-U2PAD-10M-0SS0]

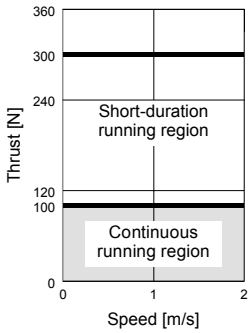

[LM-U2PAF-15M-0SS0]

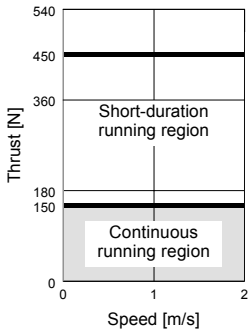

[LM-U2PBB-07M-1SS0]

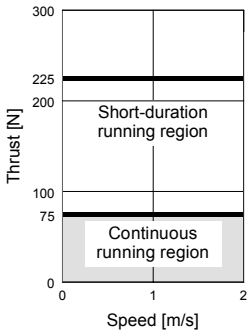

[LM-U2PBD-15M-1SS0]

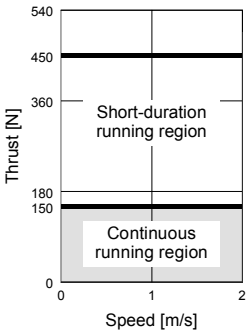

[LM-U2PBF-22M-1SS0]

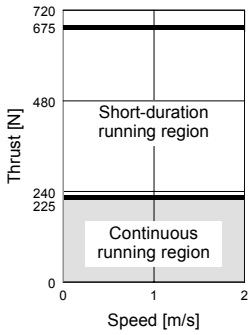

[LM-U2P2B-40M-2SS0]

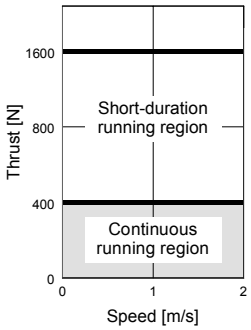

[LM-U2P2C-60M-2SS0]

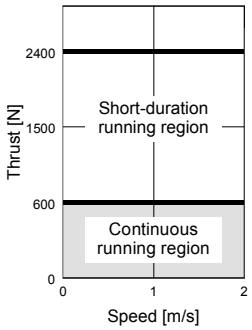

[LM-U2P2D-80M-2SS0]

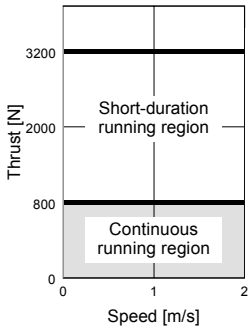

2.6.4 Installation

(1) Mounting dimensions

(a) LM-U2PAB-05M-0SS0・LM-U2PAD-10M-0SS0・LM-U2PAF-15M-0SS0
LM-U2PBB-07M-1SS0・LM-U2PBD-15M-1SS0・LM-U2PBF-22M-1SS0

[Unit: mm]

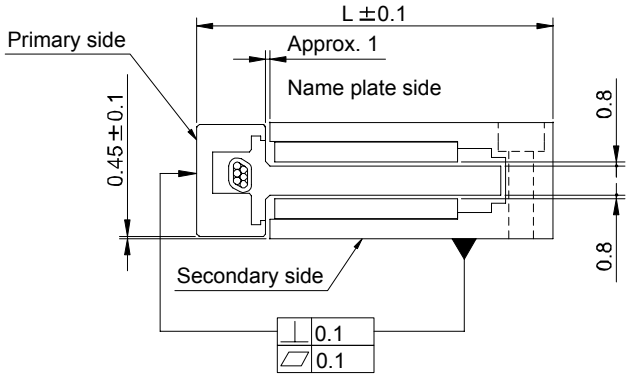

Linear servo motor	Variable dimensions L
LM-U2PAB-05M-0SS0	78
LM-U2PAD-10M-0SS0	
LM-U2PAF-15M-0SS0	
LM-U2PBB-07M-1SS0	98
LM-U2PBD-15M-1SS0	
LM-U2PBF-22M-1SS0	

(b) LM-U2P2B-40M-2SS0・LM-U2P2C-60M-2SS0・LM-U2P2D-80M-2SS0

[Unit: mm]

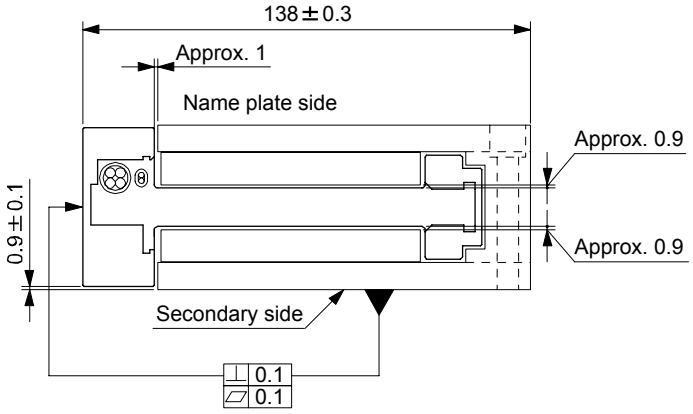

(2) Mounting the secondary side (magnet)

⚠ WARNING	・The linear servo motor uses a strong magnet on the secondary side. Therefore, not only the servo motor installation operators but also the machine operators must use abundance of caution. For example, one who uses a medical device like a pacemaker must keep away from the machine.

⚠ CAUTION	・When mounting the secondary side (magnet), use nonmagnetic tools. ・When the additional secondary side (magnet) is mounted after one has been already set, slide the additional secondary side (magnet) to mount in the specified position after setting in the position away from the one already mounted as shown in this section. ・When two or more secondary side (magnet) is mounted, set the mounting screw accumulative pitch tolerance within ± 0.2mm. Clearance may be left between the secondary sides (magnets) depending on the mounting method and the numbers.

When using multiple secondary sides (magnets), arrange the name plates attached to the products on the same side for keeping the layout of magnetic poles.

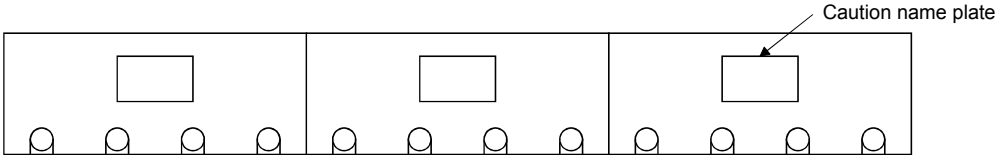

In order to decrease the clearance between the secondary sides (magnets), mount them with the following procedure.

Procedure 1. Securely fix with bolts the secondary side (magnet) to be a mounting standard.

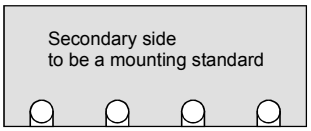

Procedure 2. Set the secondary side (magnet) on the mounting face and fix it with bolts as temporary joint.

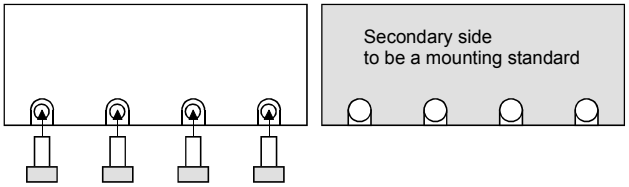

Procedure 3. Press the secondary side (magnet) fixed as temporary joint toward that to be a mounting standard.

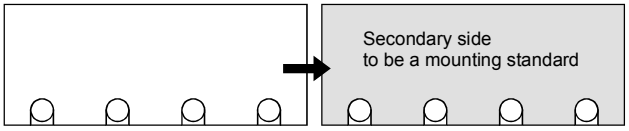

Procedure 4. Securely fix with bolts the secondary side (magnet) fixed as temporary joint.

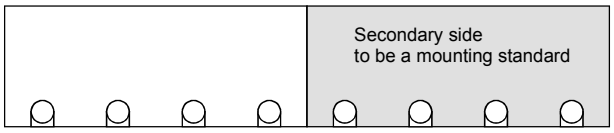

(3) Mounting the primary side (coil)

Procedure 1. Mount a part of the secondary side (magnet).

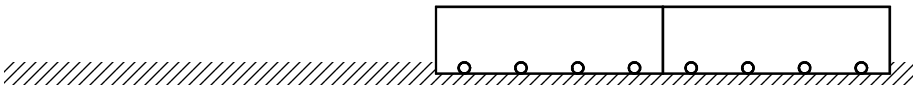

Procedure 2. Mount the primary side (coil) in the position free from the secondary side (magnet).

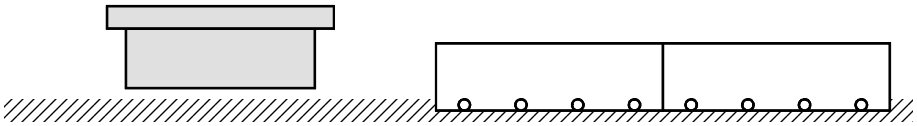

Procedure 3. Move the primary side (coil) over the secondary side (magnet) mounted.
Confirm that the primary side (coil) does not contact the secondary side (magnet).

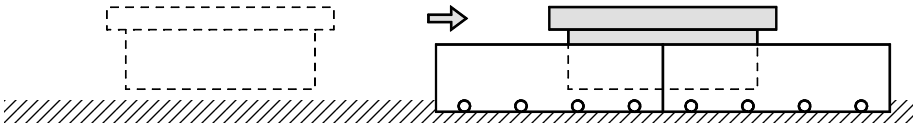

Procedure 4. Mount the rest of the secondary side (magnet).

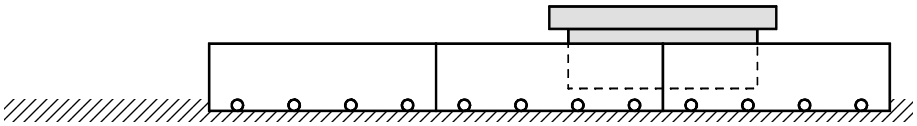

2.6.5 Outline drawings

(1) Primary side (coil)

(a) LM-U2PAB-05M-0SS0・LM-U2PAD-10M-0SS0・LM-U2PAF-15M-0SS0

[Unit: mm]

Model	Variable dimensions			Lead	
	L	M	B	U・V・W・E	G1・G2
LM-U2PAB-05M-0SS0	130	2×60 (=120)	2×3	0.14mm^2 (AWG26) (Standard finish ϕ 1.6mm)	0.14mm^2 (AWG26) (Standard finish ϕ 1.6mm)
LM-U2PAD-10M-0SS0	250	4×60 (=240)	2×5		
LM-U2PAF-15M-0SS0	370	6×60 (=360)	2×7		

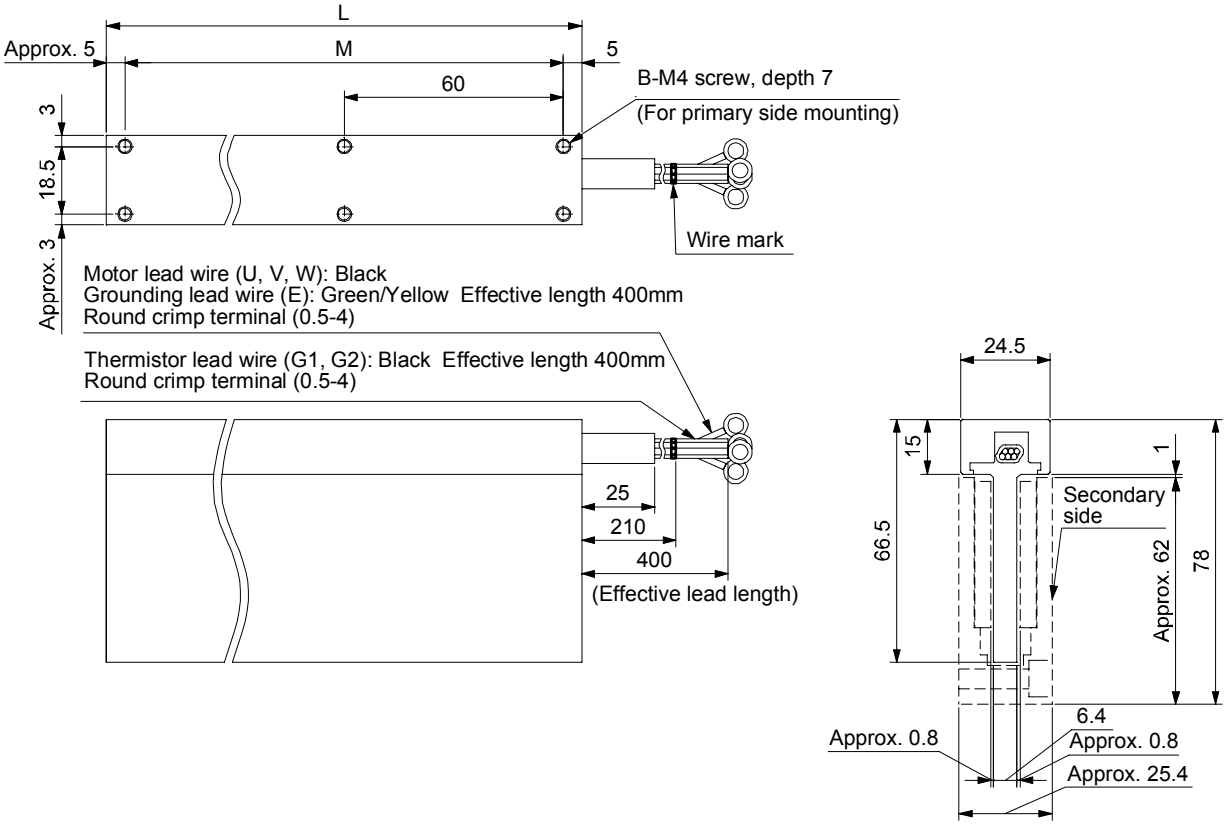

(b) LM-U2PBB-07M-1SS0・LM-U2PBD-15M-1SS0・LM-U2PBF-22M-1SS0

[Unit: mm]

Model	Variable dimensions			Lead	
	L	M	B	U・V・W・E	G1・G2
LM-U2PBB-07M-1SS0	130	2×60 (=120)	2×3	0.14mm^2 (AWG26) (Standard finish ϕ 1.6mm)	0.14mm^2 (AWG26) (Standard finish ϕ 1.6mm)
LM-U2PBD-15M-1SS0	250	4×60 (=240)	2×5		
LM-U2PBF-22M-1SS0	370	6×60 (=360)	2×7		

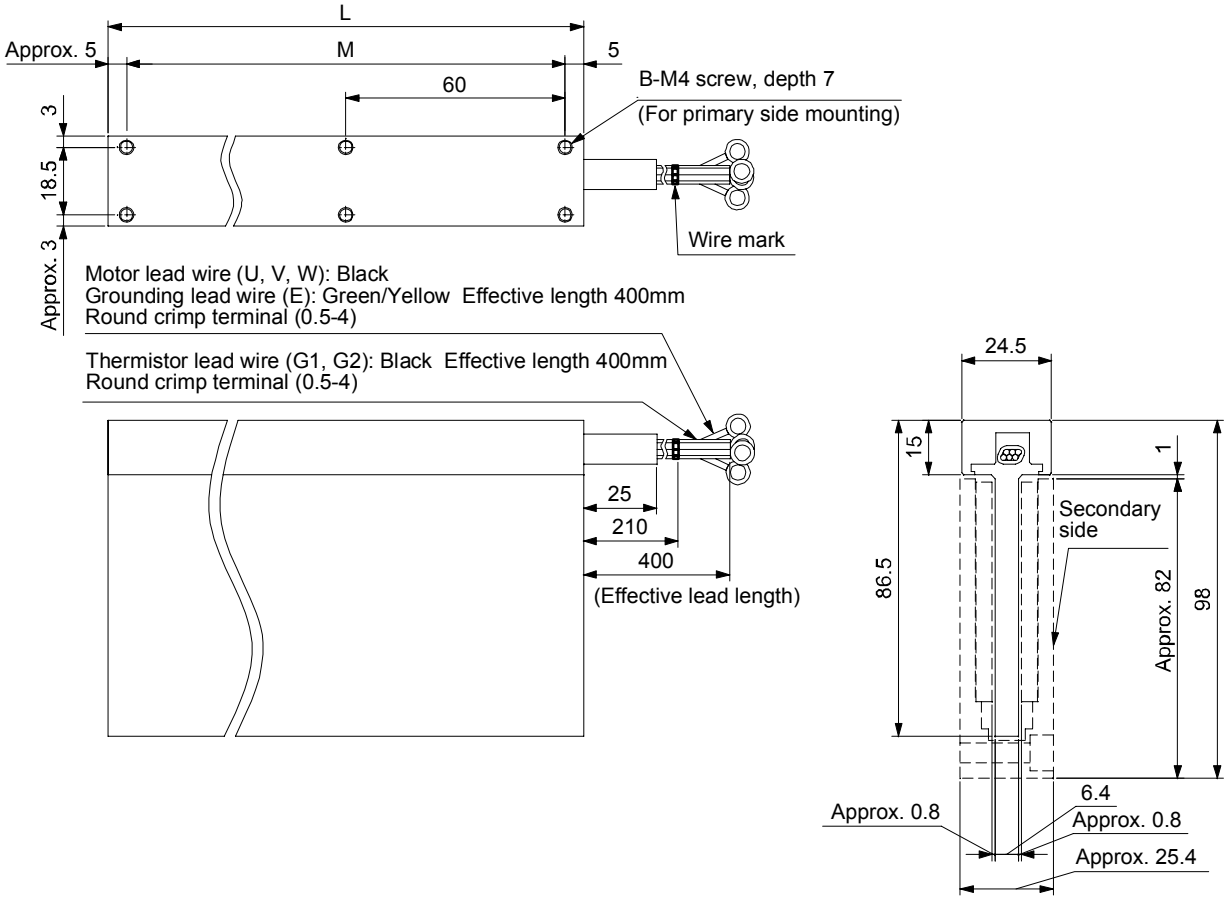

(c) LM-U2P2B-40M-2SS0・LM-U2P2C-60M-2SS0・LM-U2P2D-80M-2SS0

[Unit: mm]

Model	Variable dimensions			Lead	
	L	M	C	U・V・W・E	G1・G2
LM-U2P2B-40M-2SS0	286	4×60 (=240)	2×5	1.25mm^2 (AWG16) (Standard finish ϕ 2.7mm)	0.2mm^2 (AWG24) (Standard finish ϕ 2mm)
LM-U2P2C-60M-2SS0	406	6×60 (=360)	2×7	2mm^2 (AWG14) (Standard finish ϕ 3.12mm)	
LM-U2P2D-80M-2SS0	526	8×60 (=480)	2×9		

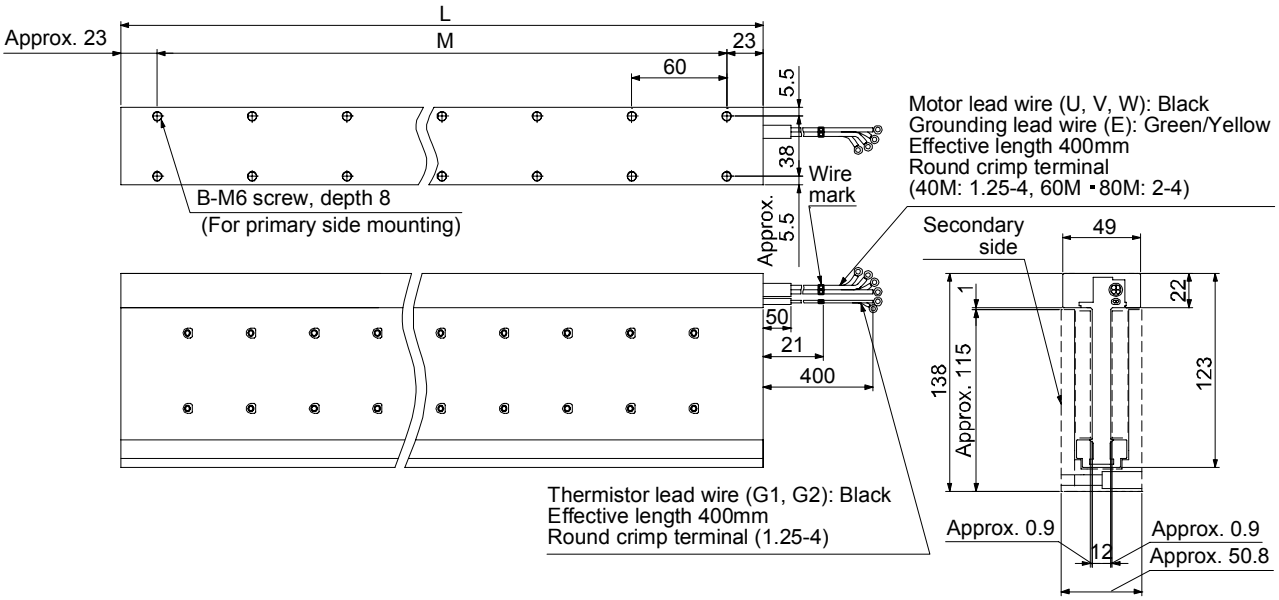

(2) Secondary side (magnet)

(a) LM-U2SA0-240-0SS0・LM-U2SA0-300-0SS0・LM-U2SA0-420-0SS0

[Unit: mm]

Model	Variable dimensions		
	L	M	B
LM-U2SA0-240-0SS0	240	3×60 (=180)	4
LM-U2SA0-300-0SS0	300	4×60 (=240)	5
LM-U2SA0-420-0SS0	420	6×60 (=360)	7

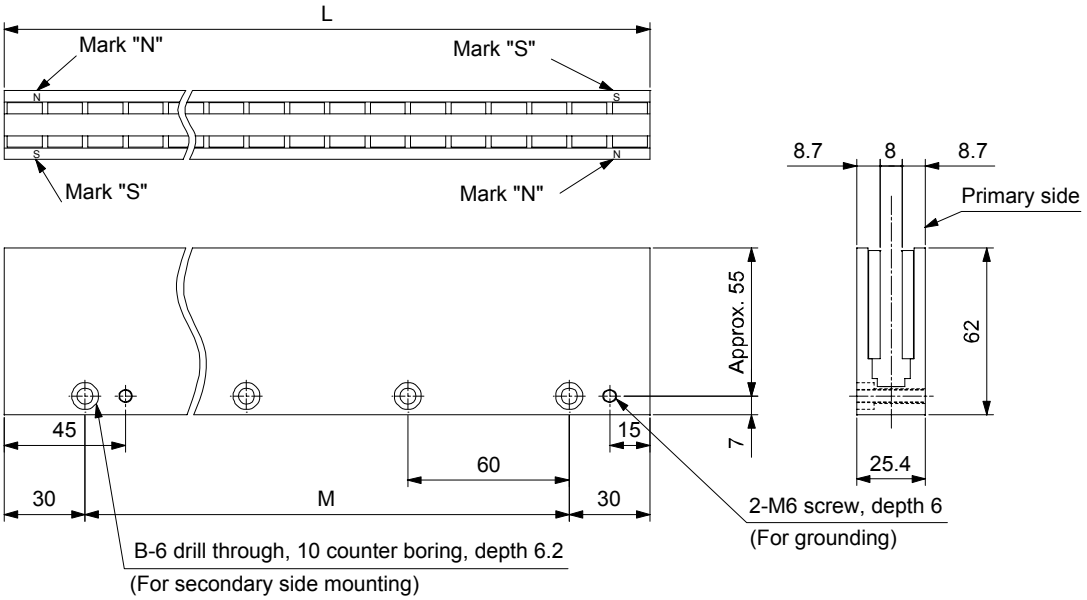

(b) LM-U2SB0-240-1SS0・LM-U2SB0-300-1SS0・LM-U2SB0-420-1SS0

[Unit: mm]

Model	Variable dimensions		
	L	M	B
LM-U2SB0-240-1SS0	240	3×60 (=180)	4
LM-U2SB0-300-1SS0	300	4×60 (=240)	5
LM-U2SB0-420-1SS0	420	6×60 (=360)	7

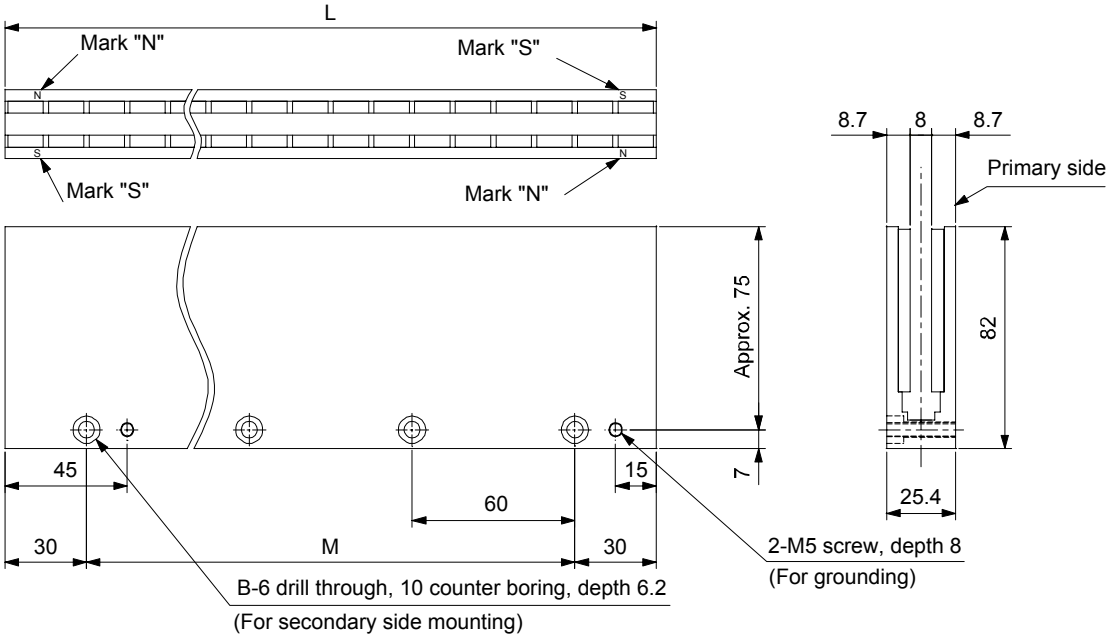

(c) LM-U2S20-300-2SS0・LM-U2S20-480-2SS0

[Unit: mm]

Model	Variable dimensions		
	L	M	B
LM-U2S20-300-2SS0	300	3×60 (=180)	4
LM-U2S20-480-2SS0	480	6×60 (=360)	7

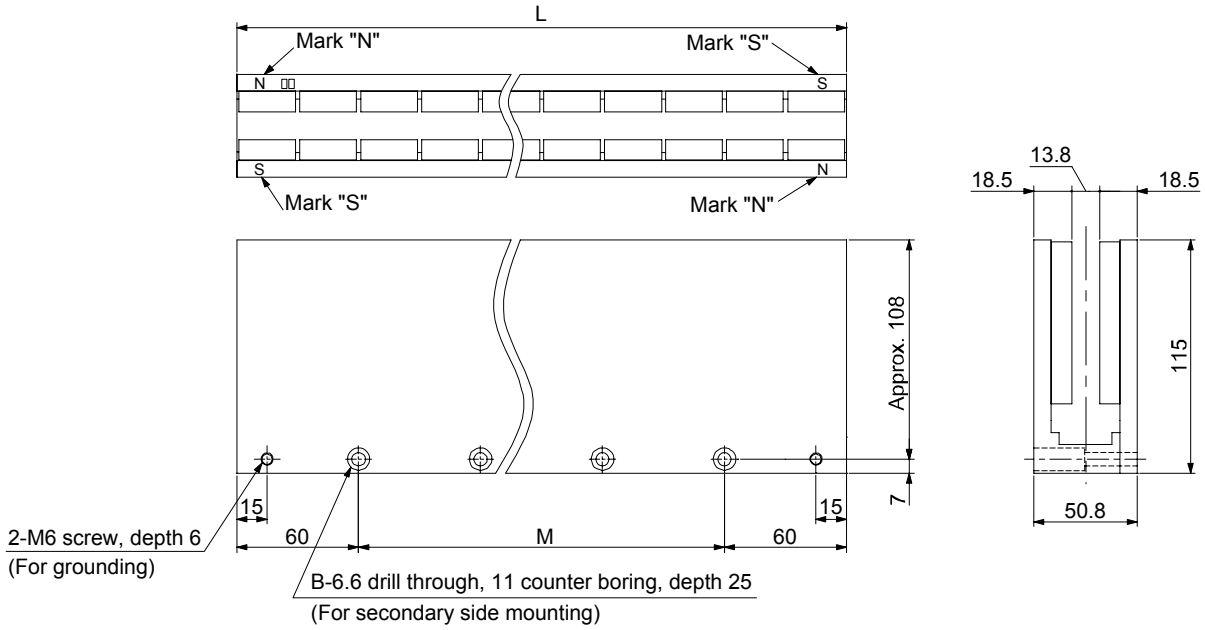

2.6.6 Connection of servo amplifier and linear servo motor

(1) Connection instructions

⚠ WARNING	・Insulate the connections of the power supply terminals to prevent an electric shock.

⚠ CAUTION	・Connect the wires to the correct phase terminals (U, V, W) of the servo amplifier and linear servo motor. Otherwise, the linear servo motor does not operate properly. ・Do not connect AC power supply directly to the linear servo motor. Otherwise, a fault may occur.

POINT

・Refer to section 11.1 for the selection of the encoder cable.

For grounding, connect the earth cable of the linear servo motor to the protective earth (PE) terminal of the servo amplifier and connect the ground cable of the servo amplifier to the earth via the protective earth of the control box. Do not connect them directly to the protective earth of the control panel.

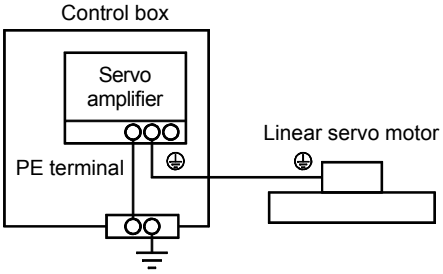

(2) Power supply cable wiring diagrams

Use the wires and connectors shown in the following figure. For the wires used for wiring, refer to section 4.2.1.

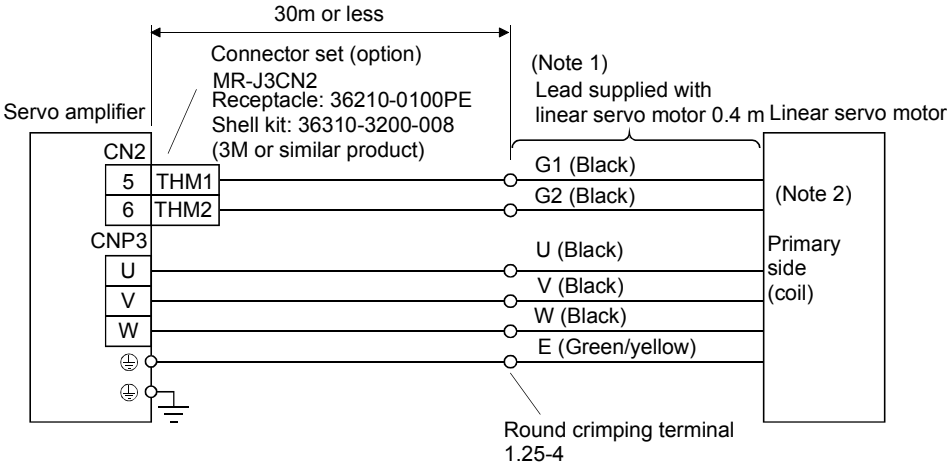

Note 1. The signal name (U, V, W, E, G1, G2) is attached on leads.
2. No polarity for the thermistors (G1 and G2)

2.7 LM-F series

2.7.1 Model code definition

(1) Primary side: coil

LM－FP□□－□M－1SS0

Series

Primary side (coil)

Maximum speed: 2m/s

Rated thrust

Symbol	Rated thurst [N]	
	Self-cooled	Liquid-cooled
06	300	600
12	600	1200
18	900	1800
24	1200	2400
36	1800	3600
48	2400	4800
60	3000	6000

Length (nominal dimensions)

Symbol	Dimensions [mm]
B	290
D	530
F	770
H	1010

Width (nominal dimensions)

Symbol	Dimensions [mm]
2	120
4	200
5	240

(2) Secondary side: magnet

LM－FS□0－□－1SS0

Series

Secondary side (magnetic)

Length (nominal dimensions)

Symbol	Dimensions [mm]
480	480
576	576

Width (nominal dimensions)

Symbol	Dimensions [mm]
2	120
4	200
5	240

2.7.2 LM-F series specification list

Linear servo motor (Primary side) LM-F□				P2B-06M-1SS0	P2D-12M-1SS0	P2F-18M-1SS0	P4B-12M-1SS0	P4D-24M-1SS0	P4F-36M-1SS0	P4H-48M-1SS0	P5H-60M-1SS0 (Note 3)
Linear servo motor (Secondary side) LM-F□				S20-480-1SS0 S20-576-1SS0			S40-480-1SS0 S40-576-1SS0				S50-480-1SS0 S50-576-1SS0
Servo amplifier MR-J3-□			Self-cooled	200B-RJ004 U518	500B-RJ004 U520	700B-RJ004 U522	500B-RJ004 U524	700B-RJ004 U526	11KB-RJ004 U528	15KB-RJ004 U530	22KB4-RJ004 U532
			Liquid-cooled	200B-RJ004 U519	500B-RJ004 U521	700B-RJ004 U523	500B-RJ004 U525	700B-RJ004 U527	11KB-RJ004 U529	15KB-RJ004 U531	22KB4-RJ004 U533
Power supply capacity			[kVA]	3.5	5.5	10	7.5	18	18	18	22
Thrust	Rated (Note 2)		[N] Self-cooled	300	600	900	600	1200	1800	2400	3000
			[N] Liquid-cooled	600	1200	1800	1200	2400	3600	4800	6000
	Maximum		[N]	1800	3600	5400	3600	7200	10800	14400	18000
Maximum speed (Note 1)			[m/s]	2.0							
Magnetic suction			[N]	4500	9000	13500	9000	18000	27000	36000	45000
Recommended load mass ratio				Less than 15 times of mass of linear servo motor primary side							
Structure				Open (Protection type: IP00)							
Cooling system				Self-cooled, Liquid-cooled							
Environ-mental conditions	Ambient temperature	In operation	[°C]	0 to +40 (non-freezing)							
			[°F]	32 to 104 (non-freezing)							
		In storage	[°C]	−15 to 70 (non-freezing)							
			[°F]	5 to 158 (non-freezing)							
	Ambient humidity	In operation		80%RH or less (non-condensing)							
		In storage		90%RH or less (non-condensing)							
	Ambience			Indoors (no direct sunlight) Free from corrosive gas, flammable gas, oil mist, dust and dirt.							
	Vibration		[m/s^2]	X, Y: 49 or less							
	Altitude			Max, 1000m above sea level							
Mass	Primary side (coil)		[kg]	9	18	27	14	28	42	56	67
			[]lb]	19.8	39.7	59.5	30.9	61.7	92.6	123	148
	Secondary side (magnet)		[kg]	7.1(480mm One magnet) 9.0(576mm One magnet)			13.5(480mm One magnet) 16.0(576mm One magnet)				20.0 (480mm One magnet) 26.0 (576mm One magnet)
			[lb]	15.7(240mm One magnet) 19.8(300mm One magnet)			29.8(480mm One magnet) 35.3(576mm One magnet)				44.1 (480mm One magnet) 79.4 (576mm One magnet)

Note 1. Max. speed of the linear servo motor is smaller value of any max. speed of the linear servo motor and rated speed of the encoder.

2. Value in the case where the aluminum board of the following dimensions (L[mm] × W[mm] × H[mm]) is mounted on the primary side (coil). (Reference value)

LM-FP2B-06M-1SS0: 280×250×50

LM-FP2D-12M-1SS0: 510×250×50

LM-FP2F-18M-1SS0: 740×250×50

LM-FP4B-12M-1SS0: 280×425×50

LM-FP4D-24M-1SS0: 500×425×50

LM-FP4F-36M-1SS0: 730×425×50

LM-FP4H-48M-1SS0: 960×425×50

LM-FP5H-60M-1SS0: 1030×470×50

3. Use a 400V class servo amplifier for this linear servo motor.

2.7.3 Thrust characteristics

For the LM-FP5H-60M-1SS0, the continuous line indicates the thrust characteristic when the input power supply specification of the servo amplifier is 3-phase 400VAC. For other linear servo motors, the continuous line indicates the thrust characteristic when the input power supply specification of the servo amplifier is 3-phase 200VAC.
The continuous/max. thrust and max. speed of the linear servo motor are in the case of the rated power voltage and frequency of the combined servo amplifier.

[LM-FP2B-06M-1SS0]

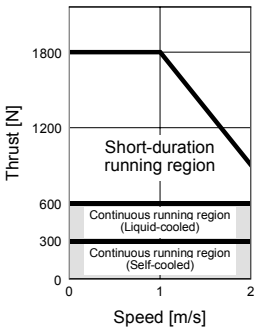

[LM-FP2D-12M-1SS0]

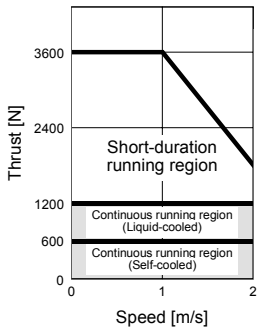

[LM-FP2F-18M-1SS0]

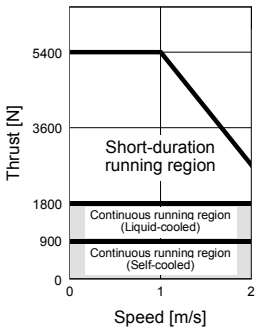

[LM-FP4B-12M-1SS0]

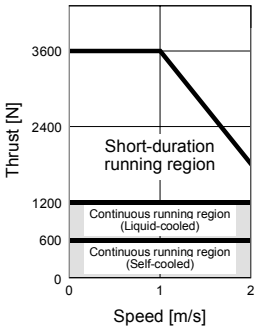

[LM-FP4D-24M-1SS0]

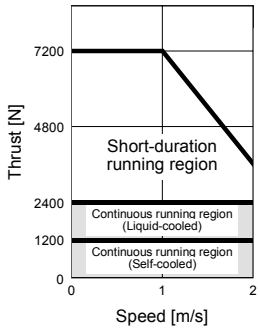

[LM-FP4F-36M-1SS0]

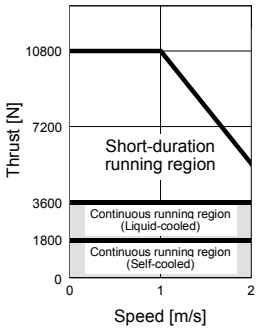

[LM-FP4H-48M-1SS0]

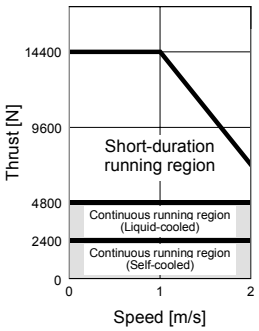

[LM-FP5H-60M-1SS0]

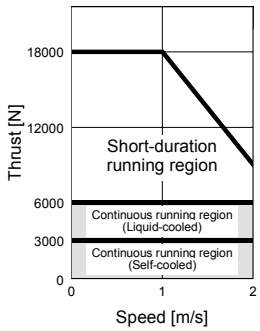

2.7.4 Installation

(1) Mounting dimensions

[Unit: mm]

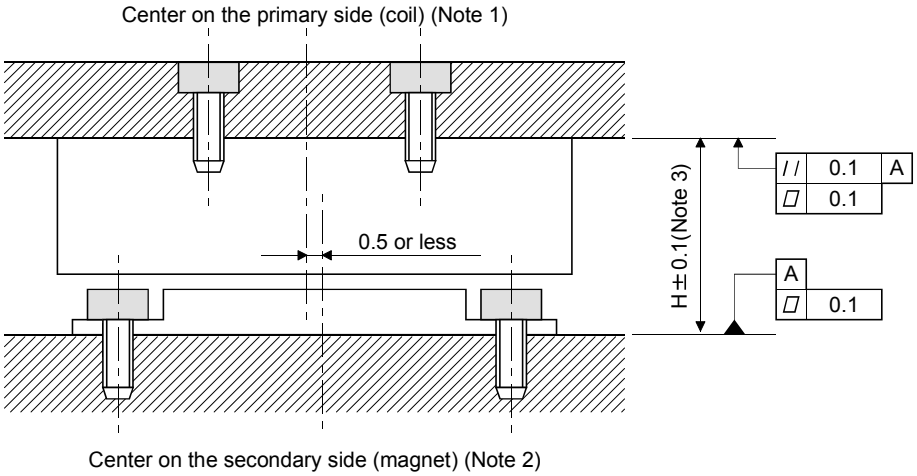

Note 1. Centers on the primary side (coil) are as follows.
LM-FP2B-06M-1SS0: Center of mounting screw pitch
LM-FP2D-12M-1SS0: Center of mounting screw pitch
LM-FP2F-18M-1SS0: Center of mounting screw pitch
LM-FP4B-12M-1SS0: Center mounting screw position
LM-FP4D-24M-1SS0: Center mounting screw position
LM-FP4F-36M-1SS0: Center mounting screw position
LM-FP4H-48M-1SS0: Center mounting screw position
LM-FP5H-60M-1SS0: Center of mounting screw pitch

2. Centers on the secondary side (magnet) is the center of mounting screw pitch.

3. H length indicates (height of primary side (coil)) + (height of secondary side (magnet)) + (length of empty clearance: 0.5mm).
LM-FP2B-06M-1SS0: H= 70mm
LM-FP2D-12M-1SS0: H= 70mm
LM-FP2F-18M-1SS0: H= 70mm
LM-FP4B-12M-1SS0: H= 70mm
LM-FP4D-24M-1SS0: H= 70mm
LM-FP4F-36M-1SS0: H= 70mm
LM-FP4H-48M-1SS0: H= 70mm
LM-FP5H-60M-1SS0: H= 76mm

(2) Mounting the secondary side (magnet)

⚠ WARNING	・The linear servo motor uses a strong magnet on the secondary side. Therefore, not only the servo motor installation operators but also the machine operators must use abundance of caution. For example, one who uses a medical device like a pacemaker must keep away from the machine.

⚠ CAUTION	・When mounting the secondary side (magnet), use nonmagnetic tools. ・When the additional secondary side (magnet) is mounted after one has been already set, slide the additional secondary side (magnet) to mount in the specified position after setting in the position away from the one already mounted as shown in this section. ・When two or more secondary side (magnet) is mounted, set the mounting screw accumulative pitch tolerance within ± 0.2mm. Clearance may be left between the secondary sides (magnets) depending on the mounting method and the numbers.

When using multiple secondary sides (magnets), arrange the name plates attached to the products on the same side for keeping the layout of magnetic poles.

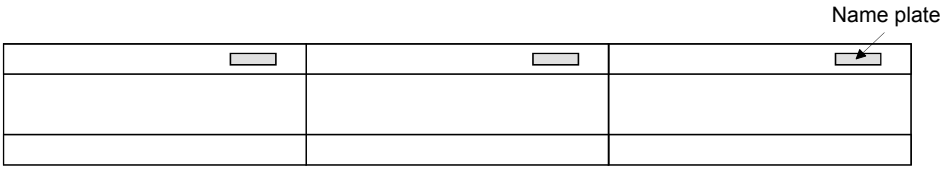

In order to decrease the clearance between the secondary sides (magnets), mount them with the following procedure.

Procedure 1. Securely fix with bolts the secondary side (magnet) to be a mounting standard.

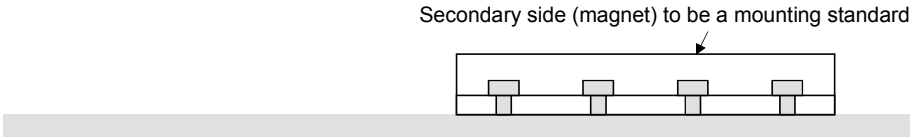

Procedure 2. Set the secondary side (magnet) on the mounting face and fix it with bolts as temporary joint.

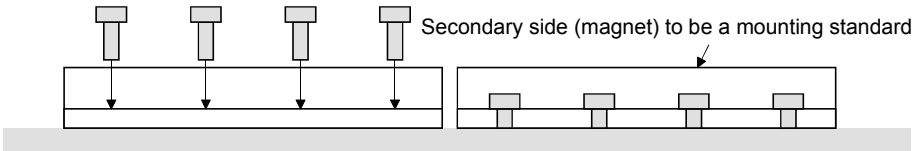

Procedure 3. Press the secondary side (magnet) fixed as temporary joint toward that to be a mounting standard.

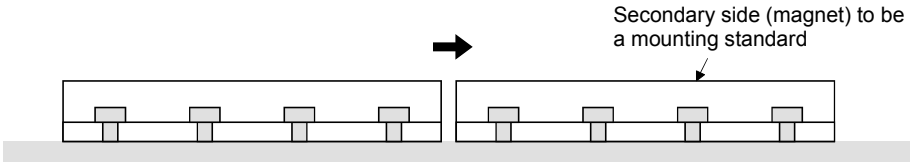

Procedure 4. Securely fix with bolts the secondary side (magnet) fixed as temporary joint.

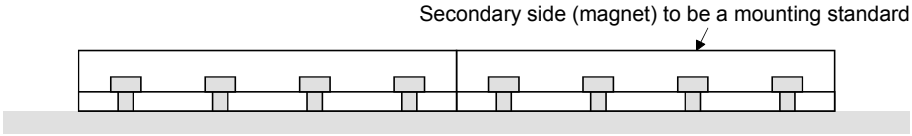

(3) Mounting the primary side (coil)

⚠ CAUTION	・To avoid the danger caused by suction, which is generated between the primary side (coil) and the secondary side (magnet) by the permanent magnet, it is recommended to mount the primary side (coil) in the position free from the secondary side (magnet) as shown in this section. ・When mounting the primary side (coil) over the secondary side (magnet) unavoidably, use the material handling equipment such as crane which is fully competent to sustain the load of suction, etc. ・When sliding the primary side (coil) to move over the secondary side (magnet) after setting, pay full attention to the suction generated.

Procedure 1. Mount a part of the secondary side (magnet).

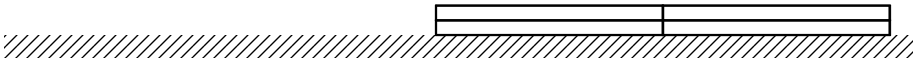

Procedure 2. Mount the primary side (coil) in the position free from the secondary side (magnet).

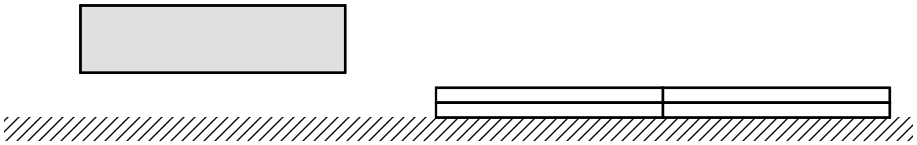

Procedure 3. Move the primary side (coil) over the secondary side (magnet) mounted.
Confirm that the primary side (coil) does not contact the secondary side (magnet).

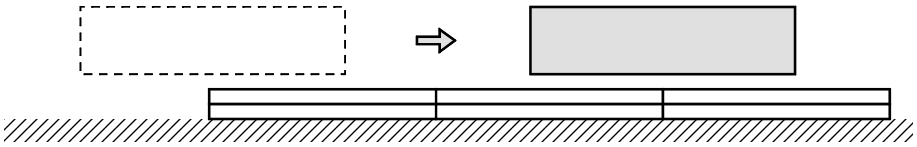

Procedure 4. Mount the rest of the secondary side (magnet).

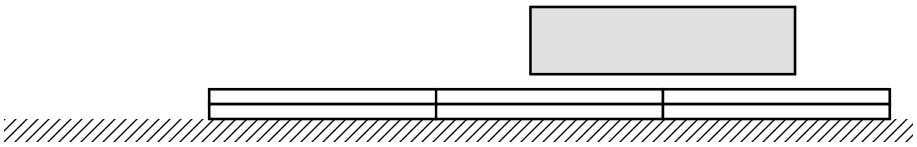

2.7.5 Outline drawings

(1) Primary side (coil)

(a) LM-FP2B-06M-1SS0・LM-FP2D-12M-1SS0・LM-FP2F-18M-1SS0

[Unit: mm]

Model	Variable dimensions		
	L	M	B
LM-FP2B-06M-1SS0	290	2×80(=160)	3×2
LM-FP2D-12M-1SS0	530	5×80(=400)	6×2
LM-FP2F-18M-1SS0	770	8×80(=640)	9×2

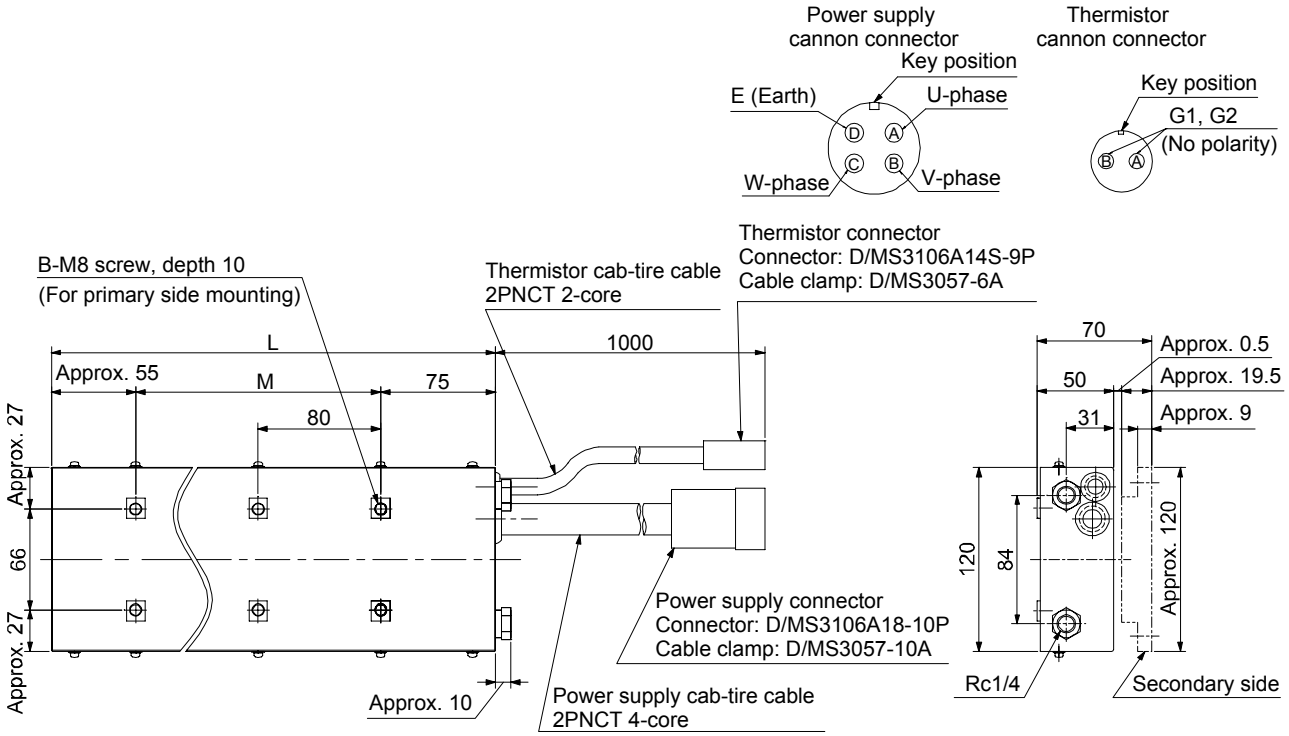

(b) LM-FP4B-12M-1SS0・LM-FP4D-24M-1SS0・LM-FP4F-36M-1SS0・LM-FP4H-48M-1SS0

[Unit: mm]

Model	Variable dimensions		
	L	M	B
LM-FP4B-12M-1SS0	290	2×80(=160)	3×3
LM-FP4D-24M-1SS0	530	5×80(=440)	6×3
LM-FP4F-36M-1SS0	770	8×80(=640)	9×3
LM-FP4F-48M-1SS0	1010	11×80(=880)	12×3

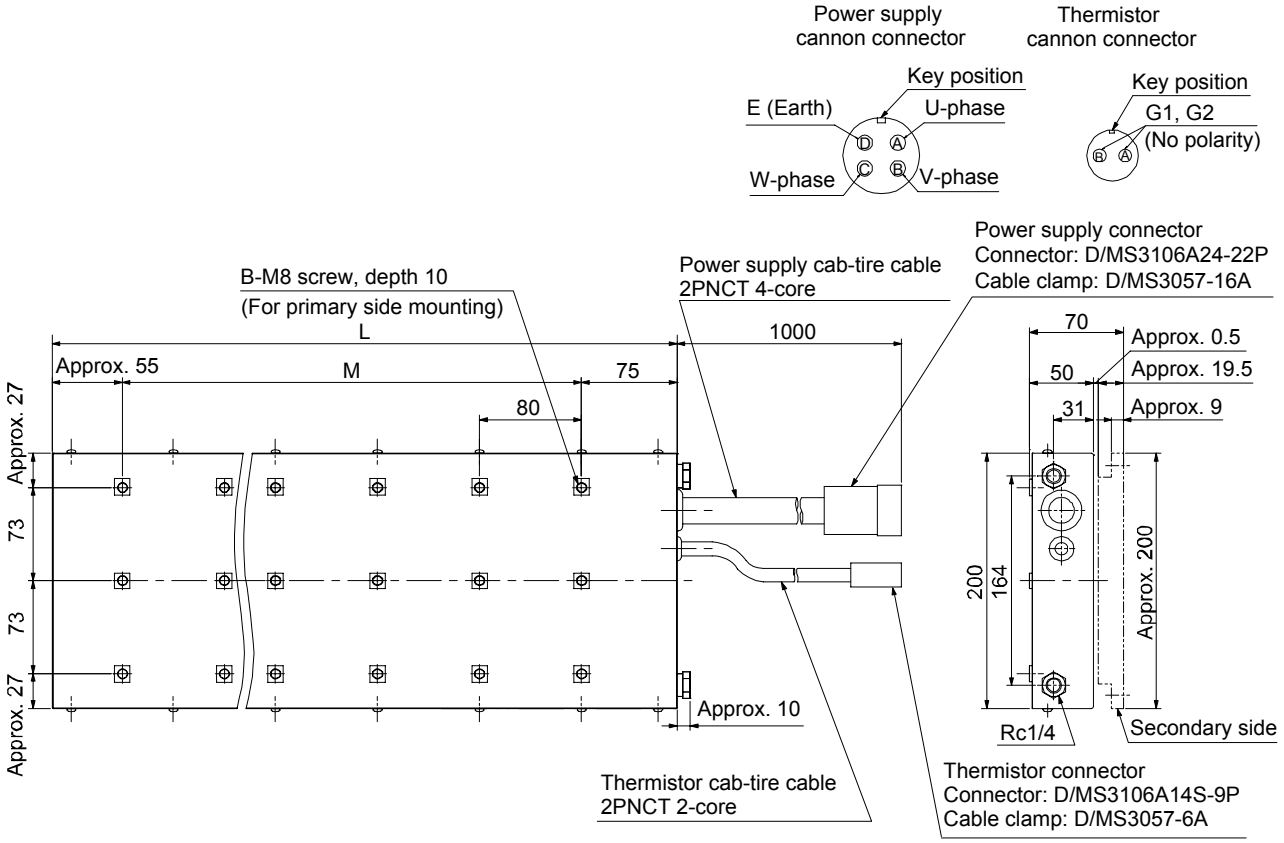

(c) LM-FP5H-60M-1SS0

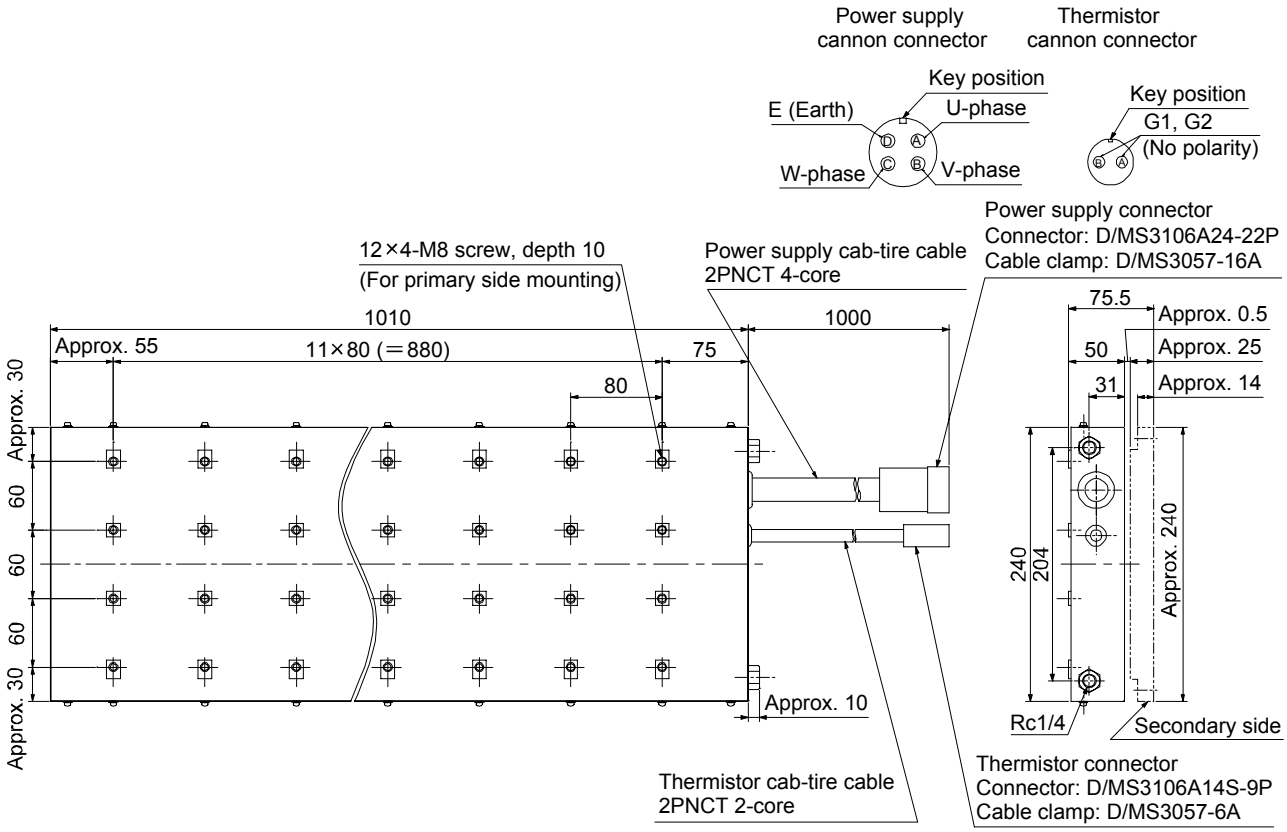

(2) Secondary side (magnet)

(a) LM-FS20-480-1SS0・LM-FS20-576-1SS0

[Unit: mm]

Model	Variable dimensions		
	L	M	B
LM-FS20-480-1SS0	480	4×96(=384)	5×2
LM-FS20-576-1SS0	576	5×96(=480)	6×2

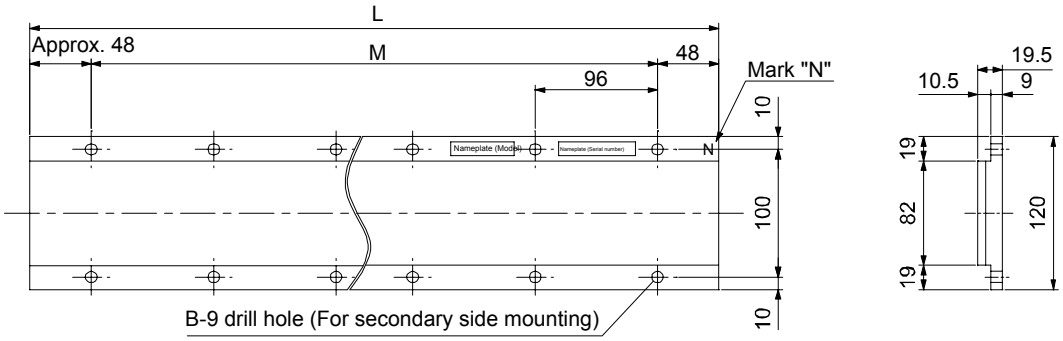

(b) LM-FS40-480-1SS0・LM-FS40-576-1SS0

[Unit: mm]

Model	Variable dimensions		
	L	M	B
LM-FS40-480-1SS0	480	4×96(=384)	5×2
LM-FS40-576-1SS0	576	5×96(=480)	6×2

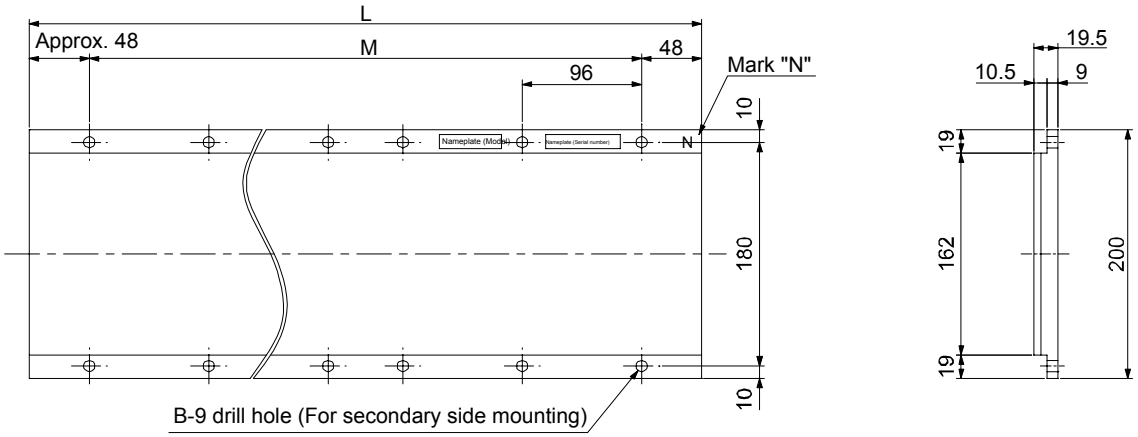

(c) LM-FS50-480-1SS0・LM-FS50-576-1SS0

[Unit: mm]

Model	Variable dimensions		
	L	M	B
LM-FS50-480-1SS0	480	4×96(=384)	5×2
LM-FS50-576-1SS0	576	5×96(=480)	6×2

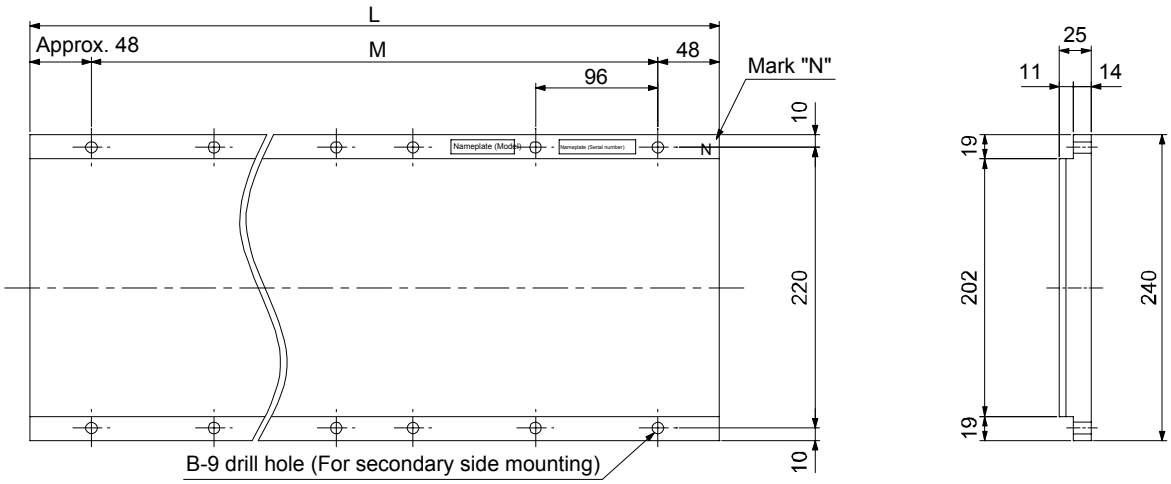

2.7.6 Connection of servo amplifier and linear servo motor

(1) Connection instructions

⚠ WARNING	・Insulate the connections of the power supply terminals to prevent an electric shock.

⚠ CAUTION	・Connect the wires to the correct phase terminals (U, V, W) of the servo amplifier and linear servo motor. Otherwise, the linear servo motor does not operate properly. ・Do not connect AC power supply directly to the linear servo motor. Otherwise, a fault may occur.

POINT

・Refer to section 11.1 for the selection of the encoder cable.

For grounding, connect the earth cable of the linear servo motor to the protective earth (PE) terminal of the servo amplifier and connect the ground cable of the servo amplifier to the earth via the protective earth of the control box. Do not connect them directly to the protective earth of the control panel.

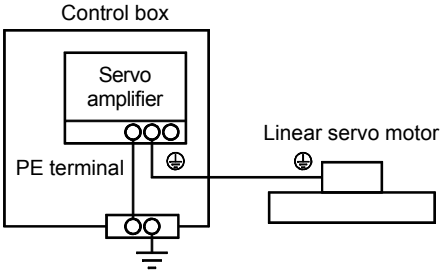

(2) Power supply cable wiring diagrams

Use the wires and connectors shown in the following figure. For the wires used for wiring, refer to section 4.2.1.

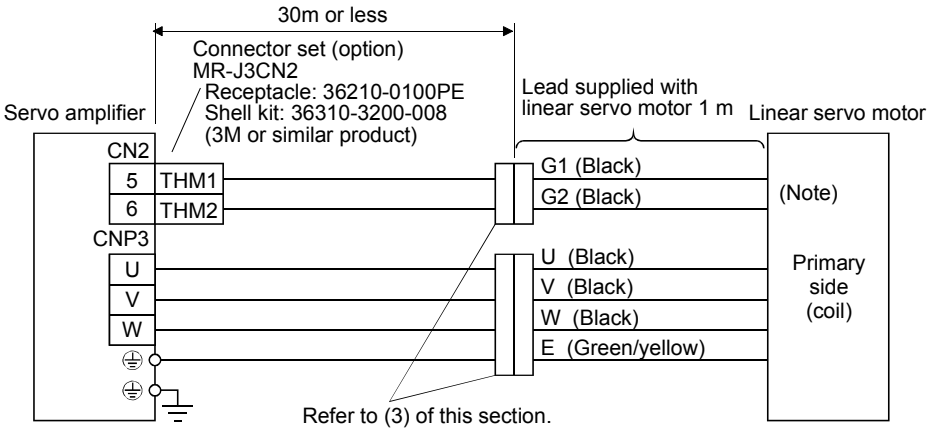

Note. No polarity for the thermistors (G1 and G2)

(3) Wiring connectors

Wiring connectors should be prepared by the user.

<table>
<tr><th>Linear servo motor primary side (Coil)</th><th>Power supply connector</th><th>Thermistor connector</th></tr>
<tr><td>LM-FP2B-06M-1SS0</td><td rowspan="3">Cable receptacle: D/MS3101A18-10S
Cable clamp: D/MS3057A-10A
(DDK)</td><td rowspan="7">Cable receptacle: D/MS3101A14S-9S
Cable clamp: D/MS3057A-6A
(DDK)</td></tr>
<tr><td>LM-FP2D-12M-1SS0</td></tr>
<tr><td>LM-FP2F-18M-1SS0</td></tr>
<tr><td>LM-FP4B-12M-1SS0</td><td rowspan="4">Cable receptacle: D/MS3101A24-22S
Cable clamp: D/MS3057A-16A
(DDK)</td></tr>
<tr><td>LM-FP4D-24M-1SS0</td></tr>
<tr><td>LM-FP4F-36M-1SS0</td></tr>
<tr><td>LM-FP4H-48M-1SS0</td></tr>
<tr><td>LM-FP5H-60M-1SS0</td><td></td></tr>
</table>

3. LINEAR ENCODER

POINT

- Always use the linear encoder cable introduced in this section. If the other products are used, a faulty may occur.
- For details of the linear encoder specifications, performance and assurance, contact each linear encoder manufacturer.

3.1 Compatible linear encoder list

Scale type		Manufacturer	Model	Resolution	Rated speed	Effective measurement length (maximum)	Communication system	Absolute position system
Mitsubishi serial interface compatibility	Absolute type	Mitutoyo Corporation	AT343A	0.05μm	2.0m/s	3000mm	2 wire type	○
			AT543A-SC		2.5m/s	2200mm		
			ST741A	0.5μm	4.0m/s	6000mm		
			ST743A(Note 2)	0.1μm				
		Heidenhain Corporation	LC491M	0.05μm	2.0m/s	2040mm	4 wire type	○
				0.01μm				
			LC192M	0.05μm	3.0m/s	4240mm		
				0.01μm				
	Incremental type	Sony Manufacturing System Corporation	SL710 +PL101R/RH +MJ830 or MJ831	0.2μm (Note 1)	6.4m/s	3000mm	2 wire type	×
			SH13 +MJ830 or MJ831	0.005μm (Note 1)	1.4m/s	1240mm		×
		Renishaw Inc.	RGH26P	5.0μm	4.0m/s	70000mm	2 wire type	×
			RGH26Q	1.0μm	3.2m/s			×
			RGH26R	0.5μm	1.6m/s			×
		Heidenhain Corporation	LIDA485 +APE391M	0.005μm (20/4096μm)	4.0m/s	30040mm	4 wire type	×
			LIDA487 +APE391M			6040mm		
ABZ-phase differential output	Incremental type	Not specified		Permissible resolution range	Encoder dependent	Encoder dependent	Differential 3 pair type	×

Note 1. Varies depending on the setting of the interpolator (MJ830/MJ831: Manufactured by Sony Manufacturing Systems Corporation).
2. This linear encoder is compatible with a servo amplifier with software version A3 or later.

POINT

- When the linear encoder is incorrectly installed, an alarm or a positioning mismatch may occur. In this case, refer to the following general checking points for the linear encoder to confirm the installation, etc.
  (a) Check that the gap between the head and scale is proper.
  (b) Check the scale head for rolling and yawing (looseness of scale head section).
  (c) Check the scale surface for contamination and scratches.
  (d) Check that the vibration and temperature are within the specified range.
  (e) Check that the speed is within the permissible range without overshooting.

3.2 Mitsubishi serial interface compatible linear encoder

3.2.1 Mitutoyo Corporation make linear scales (Absolute type)

(1) Specifications

POINT
・When the absolute position system is configured, the MR-J3BAT battery is not required.

Item	Specifications			
Model	AT343A-□□□	AT543A-□□□-SC (Note)	ST741A-□□□	ST743A-□□□
System	Capacitive, photoelectric, combined type		Magnetic induction type	
Effective measurement length	100 to 3000mm	100 to 2200mm	100 to 6000mm	
Resolution	0.05μm		0.5μm	0.1μm
Indication accuracy (20 (68) [℃ (℉)])	100 to 1500mm: 3+3L/1000μm 1600 to 3000mm: 5+5L/1000μm L: Effective measurement length	100 to 2200mm: 3+3L/1000μm L: Effective measurement length	8+ (5L/1000) μm L: Effective measurement length	
Supply power voltage	5V±5%		5V±10%	
Current consumption	Max.250mA	Max.270mA		
Rated response speed	2.0m/s	2.5m/s	4.0m/s	
Maximum response speed	2.0m/s	2.5m/s	4.0m/s	
Operating temperature range	0 to 45℃ (32 to 113℉) (non-freezing)	0 to 50℃ (32 to 122℉) (non-freezing)		
Operating humidity range	20 to 80%RH (non-condensing)			
Storage temperature range	−20 to 70℃ (−4 to 158℉) (non-freezing)			
Storage humidity range	20 to 80%RH (non-condensing)			
Dust tightness・water tightness	IP53 or equivalent (in the indication method given in the instruction manual of the linear scales manufactured by Mitutoyo Corporation)		IP65 or equivalent (Detection head part only)	
Vibration resistance	100m/s^2 (55 to 2000Hz)	195m/s^2 (55 to 2000Hz)	300m/s^2	
Shock resistance	150m/s^2 (1/2sin, 11ms)	340m/s^2 (1/2sin, 11ms)	500m/s^2	
Sliding force	5N or less	4N or less		
Output signal	Serial communication compatibility			
Output cable	Options manufactured by Mitutoyo Corporation Part No.09BAA598A to C:0.2, 2, 3m	Supplied as standard Head cable 2m+output cable 3m	Supplied as standard Head cable 1m	
Load side encoder cable	MR-EKCBL□M-H (Option manufactured by Mitsubishi Electric) When fabricating, refer to (4) (a), (b) in this section.		06ACF117A: 5m 06ACF117B: 10m Options manufactured by Mitutoyo Corporation When fabricating, refer to (4) (c) in this section.	

Note. For AT543A-□□□-HC/-HL/-HR, contact with Mitutoyo Corporation.

(2) Linear scale unit structure

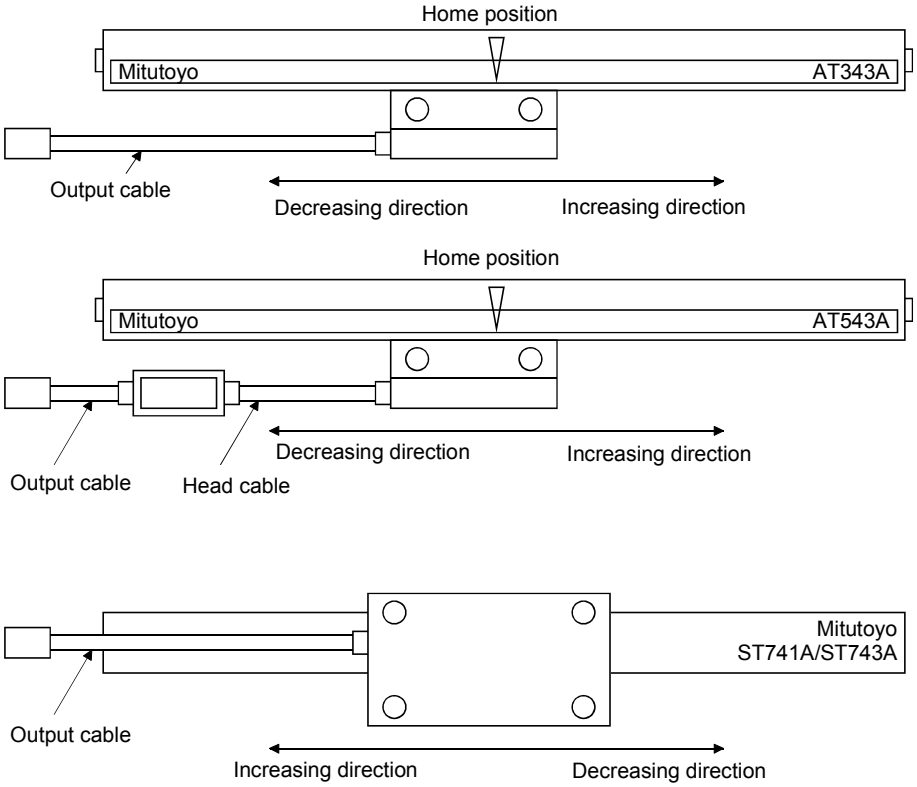

(3) Outline drawings

(a) AT343A

[Unit: mm]

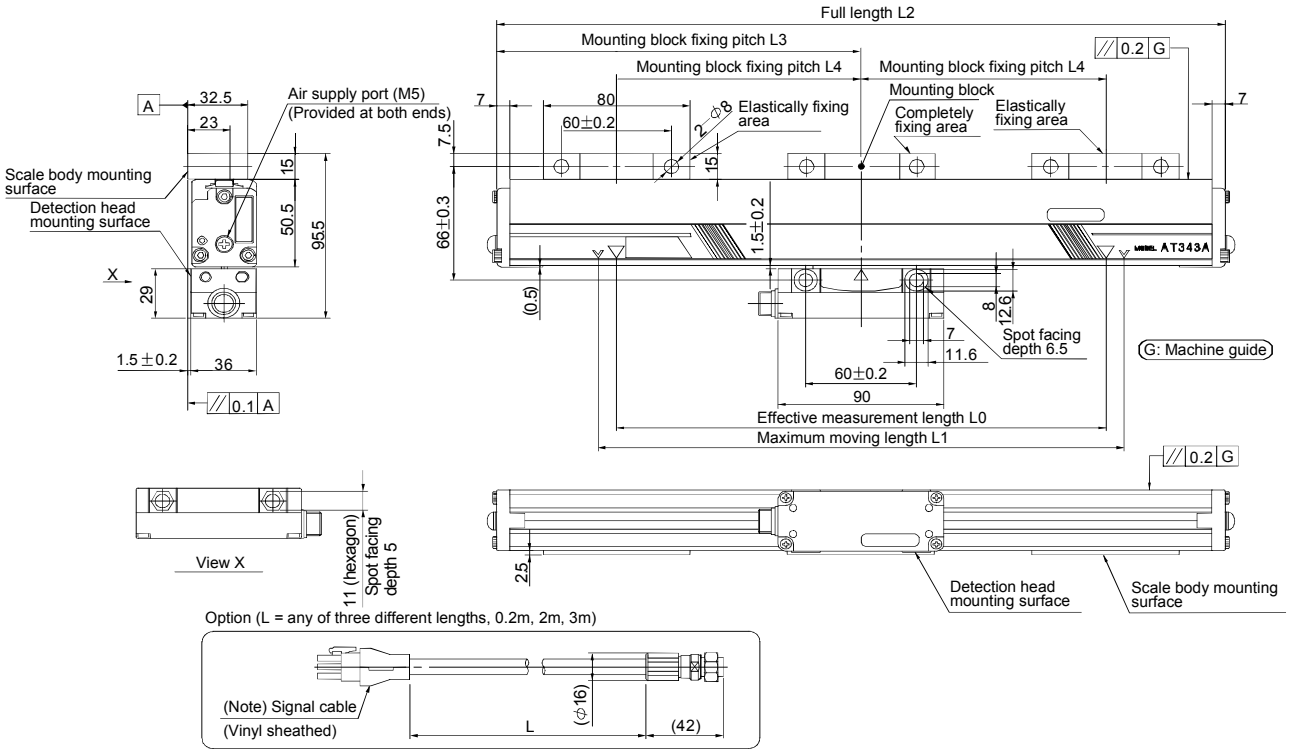

Note. The signal cable is an options manufactured by Mitutoyo Corporation. (Part. No.09BAA598A to C: 0.2m, 2m, 3m)

Model	Effective measurement length L0	Maximum moving length L1	Full length L2	Mounting block fixing pitch		Number of mounting blocks (pcs.)	Model	Effective measurement length L0	Maximum moving length L1	Full length L2	Mounting block fixing pitch		Number of mounting blocks (pcs.)
				L3	L4						L3	L4	
AT343A-100	100	120	230	65	100	2	AT343A-1100	1100	1160	1270	635	275	5
AT343A-150	150	170	280	65	150		AT343A-1200	1200	1260	1370	685	300	
AT343A-200	200	220	330	65	200		AT343A-1300	1300	1360	1470	735	325	
AT343A-250	250	270	380	65	250		AT343A-1400	1400	1460	1570	785	350	
AT343A-300	300	330	440	220	150	3	AT343A-1500	1500	1560	1670	835	375	
AT343A-350	350	380	490	245	175		AT343A-1600	1600	1690	1800	900	400	
AT343A-400	400	430	540	270	200		AT343A-1700	1700	1790	1900	950	425	
AT343A-450	450	480	590	295	225		AT343A-1800	1800	1890	2000	1000	450	
AT343A-500	500	540	650	325	250		AT343A-2000	2000	2100	2210	1105	335	7
AT343A-600	600	650	760	380	300		AT343A-2200	2200	2300	2410	1205	370	
AT343A-700	700	760	870	435	350		AT343A-2400	2400	2500	2610	1305	400	
AT343A-750	750	810	920	460	375		AT343A-2500	2500	2600	2710	1355	315	9
AT343A-800	800	860	970	485	400		AT343A-2600	2600	2700	2810	1405	325	
AT343A-900	900	960	1070	535	450		AT343A-2800	2800	2900	3010	1505	350	
AT343A-1000	1000	1060	1170	585	500		AT343A-3000	3000	3050	3210	1605	375	

(b) AT543A-SC

[Unit: mm]

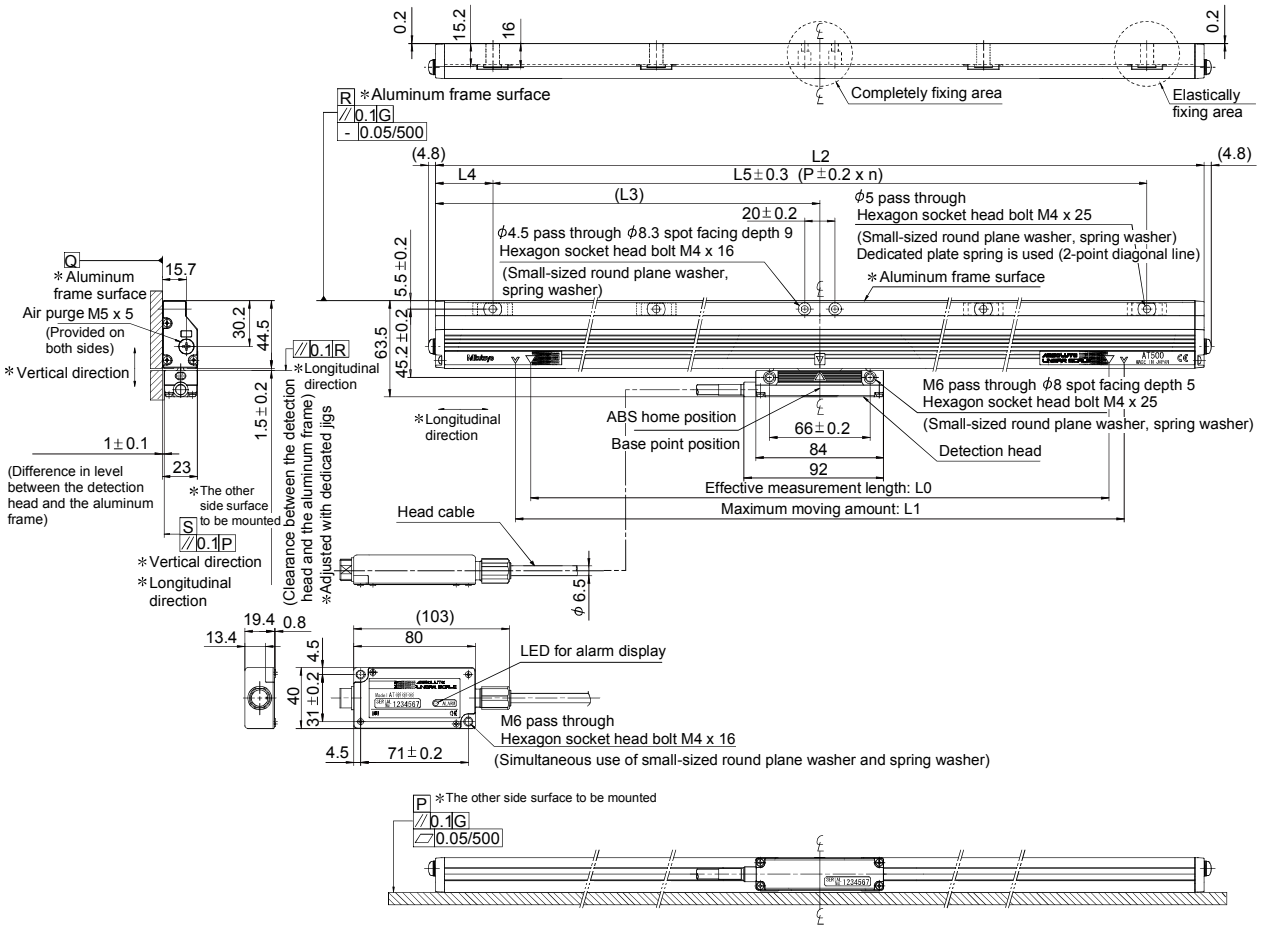

Model	Effective measurement length L0	L1	L2	L3	L4	L5	P	N [pcs]
AT543A -100-SC	100	120	225	112.5	37.5	150	75	2
AT543A -200-SC	200	220	325	162.5	37.5	250	125	2
AT543A -300-SC	300	320	425	212.5	37.5	350	175	2
AT543A -400-SC	400	420	525	262.5	62.5	400	200	2
AT543A -500-SC	500	520	625	312.5	62.5	500	125	4
AT543A -600-SC	600	620	725	362.5	62.5	600	150	4
AT543A -700-SC	700	720	825	412.5	62.5	700	175	4
AT543A -800-SC	800	820	925	462.5	62.5	800	200	4
AT543A -900-SC	900	920	1025	512.5	62.5	900	150	6
AT543A -1000-SC	1000	1020	1125	562.5	37.5	1050	175	6

Model	Effective measurement length L0	L1	L2	L3	L4	L5	P	N [pcs]
AT543A -1100-SC	1100	1120	1225	612.5	87.5	1050	175	6
AT543A -1200-SC	1200	1220	1325	616.5	62.5	1200	200	6
AT543A -1300-SC	1300	1320	1425	712.5	112.5	1200	150	8
AT543A -1400-SC	1400	1420	1525	762.5	62.5	1400	175	8
AT543A -1500-SC	1500	1520	1625	812.5	112.5	1400	175	8
AT543A -1600-SC	1600	1620	1725	862.5	62.5	1600	200	8
AT543A -1800-SC	1700	1820	1925	962.5	87.5	1750	175	10
AT543A -2000-SC	2000	2020	2125	1062.5	62.5	2000	200	10
AT543A -2200-SC	2200	2220	2325	1162.5	112.5	2100	175	12

(c) ST741A・ST743A

[Unit: mm]

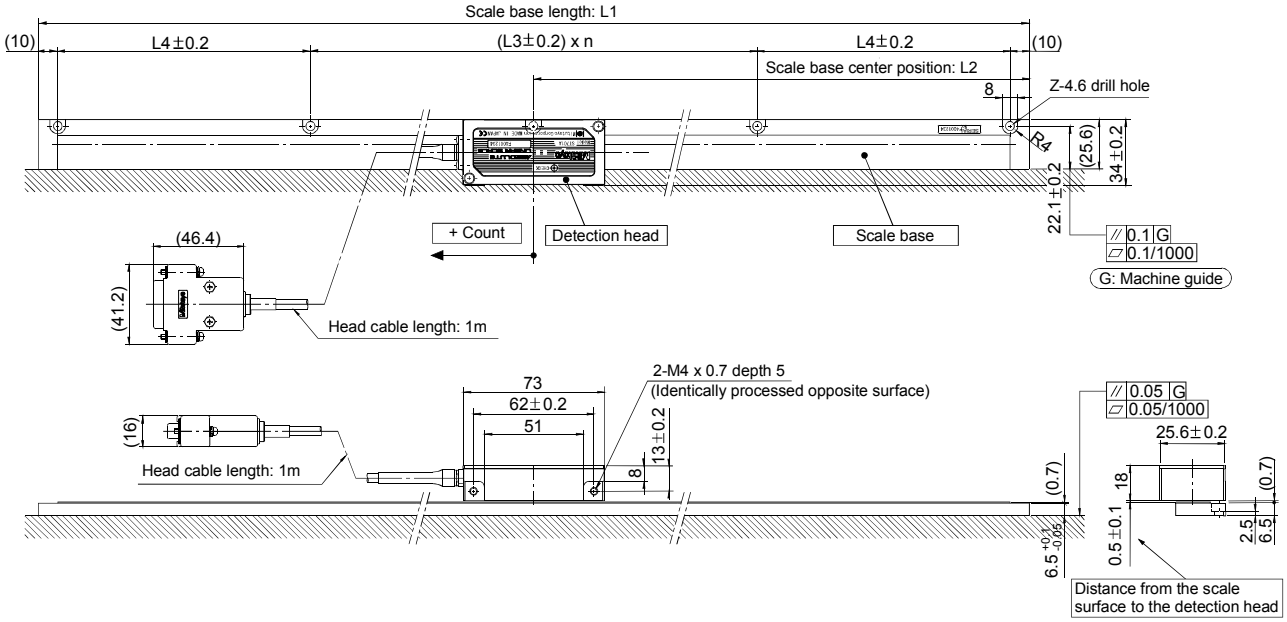

Model	Effective measurement length	Maximum moving length	L1	L2	L3	n	L4	Z
ST741A-100A ST743A-100A	100	110	180	90	80	2	—	3
ST741A-200A ST743A-200A	200	210	280	140	130		—	
ST741A-300A ST743A-300A	300	310	380	190	180		—	
ST741A-400A ST743A-400A	400	410	480	240	230		—	
ST741A-500A ST743A-500A	500	510	580	290	200		80	5
ST741A-600A ST743A-600A	600	610	680	340			130	
ST741A-700A ST743A-700A	700	710	780	390			180	
ST741A-800A ST743A-800A	800	810	880	440			230	
ST741A-900A ST743A-900A	900	910	980	490		4	80	7
ST741A-1000A ST743A-1000A	1000	1010	1080	540			130	
ST741A-1100A ST743A-1100A	1100	1110	1180	590			180	
ST741A-1200A ST743A-1200A	1200	1210	1280	640			230	
ST741A-1300A ST743A-1300A	1300	1310	1380	690		6	80	9
ST741A-1400A ST743A-1400A	1400	1410	1480	740			130	
ST741A-1500A ST743A-1500A	1500	1510	1580	790			180	

Model	Effective measurement length	Maximum moving length	L1	L2	L3	n	L4	Z
ST741A-1600A ST743A-1600A	1600	1610	1680	840	200	6	230	9
ST741A-1700A ST743A-1700A	1700	1710	1780	890		8	80	11
ST741A-1800A ST743A-1800A	1800	1810	1880	940			130	
ST741A-1900A ST743A-1900A	1900	1910	1980	990			180	
ST741A-2000A ST743A-2000A	2000	2010	2080	1040			230	
ST741A-2100A ST743A-2100A	2100	2110	2180	1090		10	80	13
ST741A-2200A ST743A-2200A	2200	2210	2280	1140			130	
ST741A-2300A ST743A-2300A	2300	2310	2380	1190			180	
ST741A-2400A ST743A-2400A	2400	2410	2480	1240			230	
ST741A-2500A ST743A-2500A	2500	2510	2580	1290		12	80	15
ST741A-2600A ST743A-2600A	2600	2610	2680	1340			130	
ST741A-2700A ST743A-2700A	2700	2710	2780	1390			180	
ST741A-2800A ST743A-2800A	2800	2810	2880	1440			230	
ST741A-2900A ST743A-2900A	2900	2910	2980	1490		14	80	17
ST741A-3000A ST743A-3000A	3000	3010	3080	1540			130	

(4) Encoder cable

(a) For AT343A

1) Cable composition

Prepare a cable based on the following structure diagram.

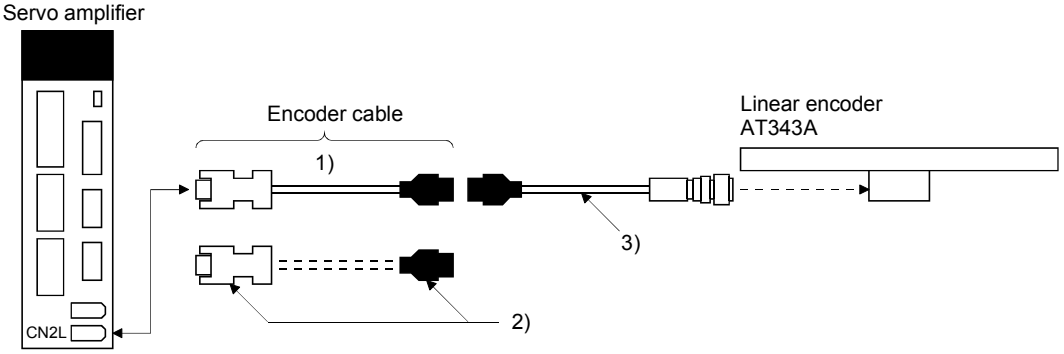

	Cable	
	Encoder cable	Output cable
When using an optional cable	1) MR-EKCBL□M–H (Options manufactured by Mitsubishi Electric Corporation) 2m・5m・10m (Refer to section 3.4.)	3) Options manufactured by Mitutoyo Corporation (Note) (This should be prepared by the customer.) Part No.09BAA598A: 0.2m Part No.09BAA598B: 2m Part No.09BAA598C: 3m
When producing a encoder cable	2) Connector set MR-ECNM (Option manufactured by Mitsubishi Electric Corporation) (Refer to section 3.4.)	

Note. For details, contact with Mitutoyo Corporation.

2) Production of encoder cable

Produce the encoder cable using MR-EKCBL□M-H (10m or less) or MR-ECNM as shown below. The encoder cable can be produced as the length of max. 30m. The following diagram shows a connecting example of more than 5m to 10m.

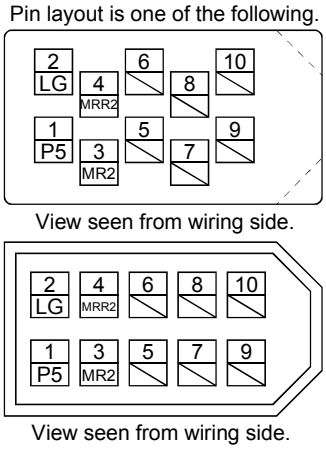

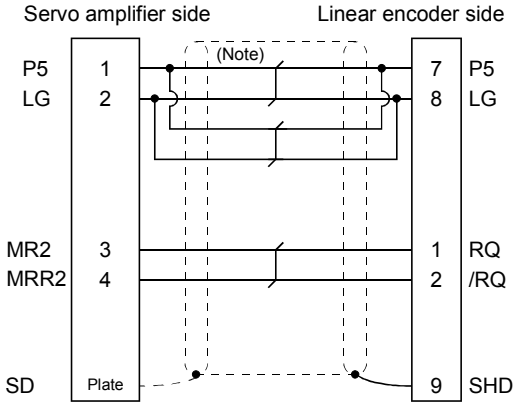

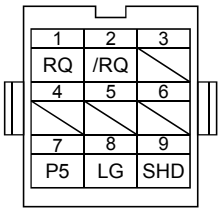

Note. The following table shows the cable size to be used and the number of paired connections of LG and P5.

Wiring length	Number of LG and P5 connections (When the output cable is 3m or less)	Cable size
to 5m	1-pair	AWG22
to 10m	2-pair	
to 20m	4-pair	
to 30m	6-pair	

(b) For AT543A-SC

1) Cable composition

Prepare a cable based on the following structure diagram.

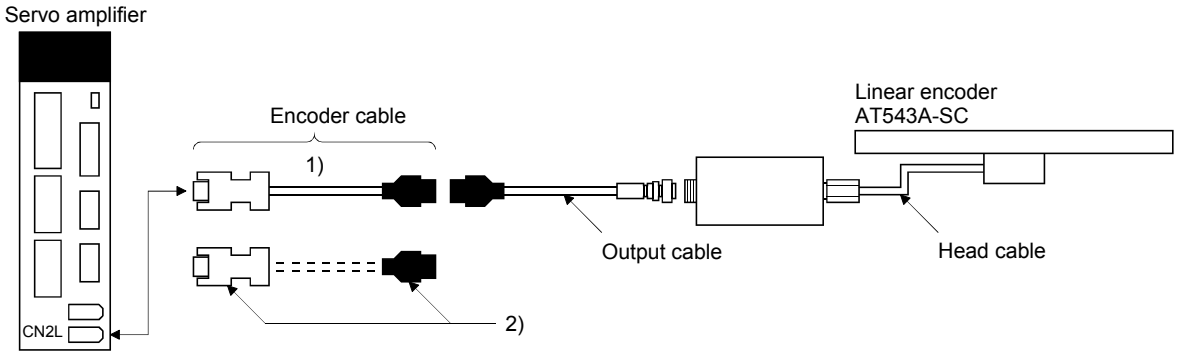

	Cable		
	Encoder cable	Output cable	Head cable
When using an optional cable	1) MR-EKCBL□M-H (Option manufactured by Mitsubishi Electric Corporation) 2m・5m・10m (Refer to section 3.4.)	Accessories for linear encoder Cable length: 3m	Accessories for linear encoder Cable length: 2m
When producing a load side encoder cable	2) Connector set MR-ECNM (Option manufactured by Mitsubishi Electric Corporation) (Refer to section 3.4.)		

2) Production of encoder cable

Produce the encoder cable using MR-EKCBL□M-H (10m or less) or MR-ECNM as shown below. The encoder cable can be produced as the length of max. 30m. The following diagram shows a connecting example of more than 5m to 10m.

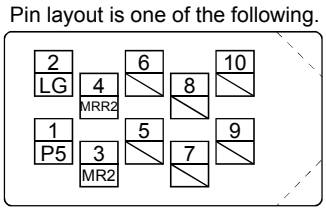

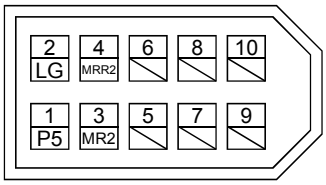

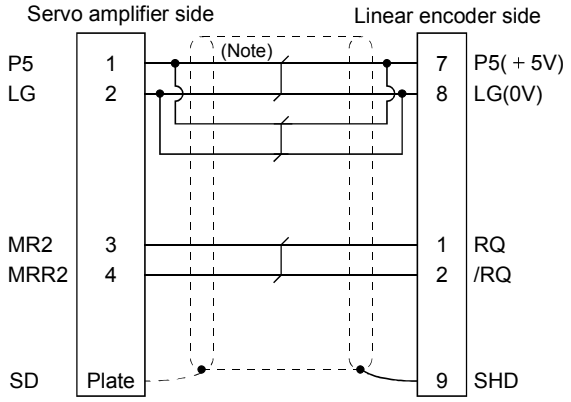

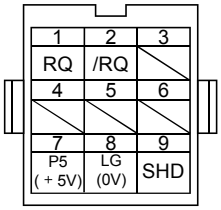

Note. The following table shows the cable size to be used and the number of paired connections of LG and P5.

Wiring length	Number of LG and P5 connections (When the output cable is 3m or less)	Cable size
to 5m	1-pair	AWG22
to 10m	2-pair	
to 20m	4-pair	
to 30m	6-pair	

(c) For ST741A or ST743A

1) Cable structure

Prepare a cable based on the following structure diagram.

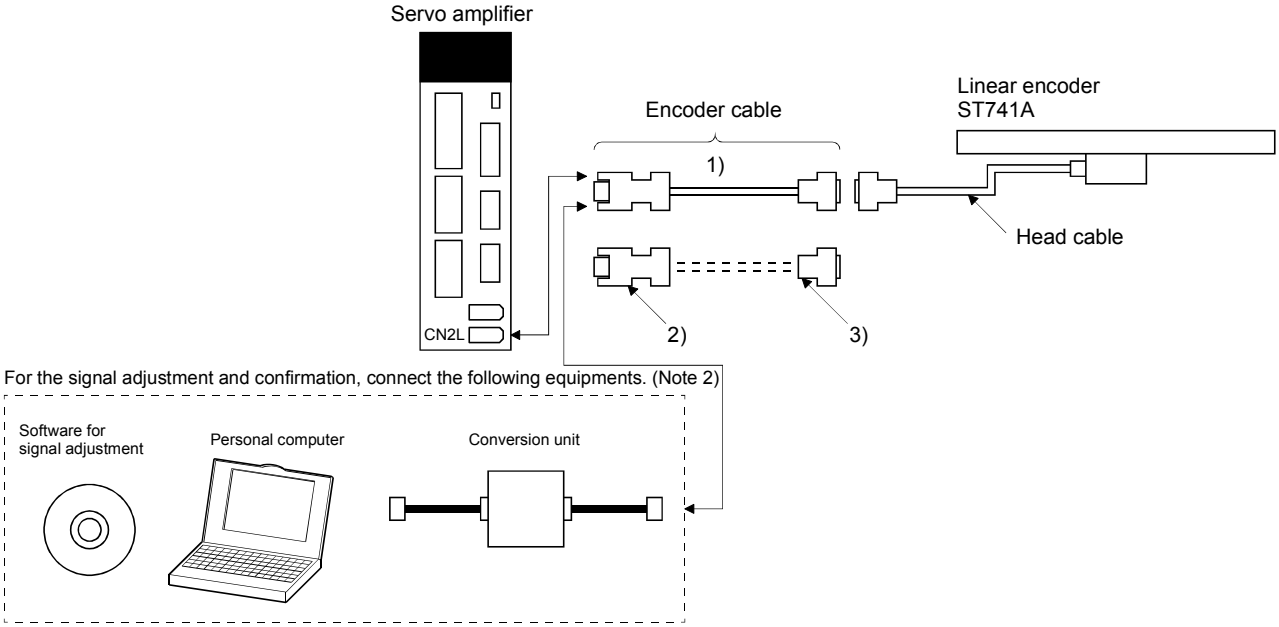

	Cable		
	Encoder cable		Head cable
When using an optional cable	1) Options manufactured by Mitutoyo Corporation (This should be prepared by the customer.) (Note 1) Part No.06ACF117A: 5m Part No.06ACF117B: 10m		Accessories for linear encoder Cable length: 1m
When producing a load side encoder cable	2) Connector set MR-J3CN2 (Option manufactured by Mitsubishi Electric Corporation) (Refer to section 3.4.)	3) Junction connector (This should be prepared by the customer.) D-SUB (female) 15 Pin shell: HDAB-15S' Plug case: HDA-CTH (manufactured by HIROSE ELECTRIC CO., LTD)	

Note 1. For details, contact with Mitutoyo Corporation.

2. When mounting ST741A・ST743A, a personal computer (with RS-232C port) for the signal adjustment and confirmation, and a software and conversion unit for signal adjustment are required. For details, contact with Mitutoyo Corporation.

2) Production of encoder cable

Produce the encoder cable using MR-J3CN2 or a junction connector as shown below. The encoder cable can be produced as the length of max. 30m. The following diagram shows a connecting example of more than 5m to 10m.

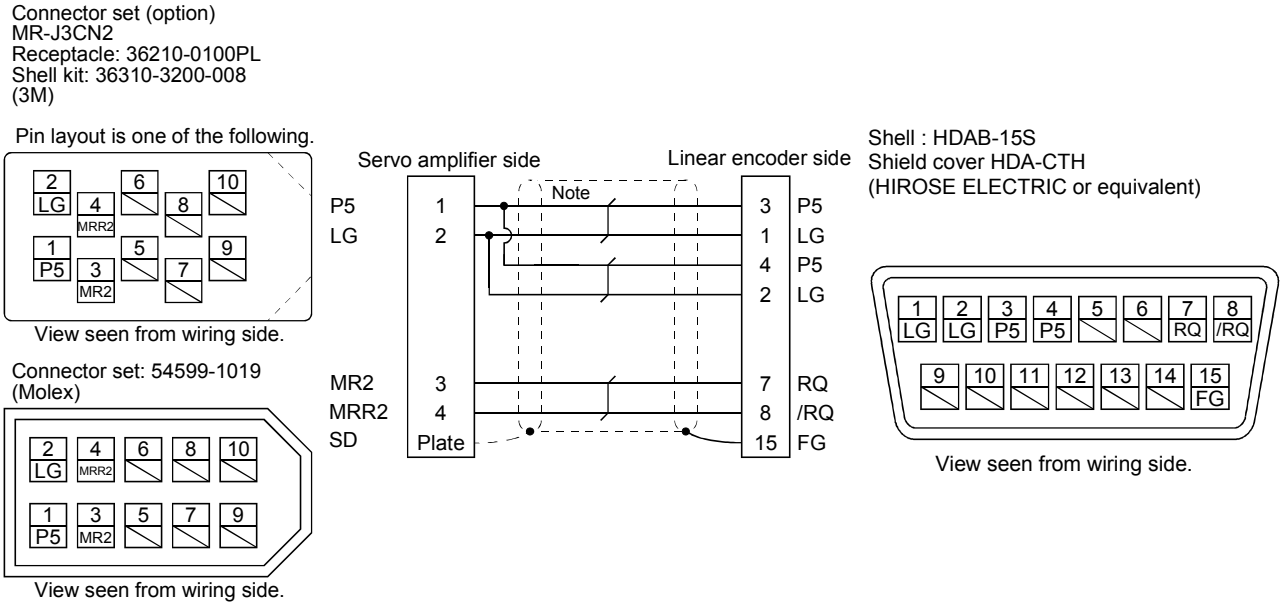

Note. The following table shows the cable size to be used and the number of paired connections of LG and P5.

Wiring length	Number of LG and P5 connections (When the head cable is 1m or less)	Cable size
to 5m	1-pair	AWG22
to 10m	2-pair	
to 20m	3-pair	
to 30m	4-pair	

3.2.2 Linear encoder manufactured by Heidenhain Corporation

(1) Specifications

> POINT
> ・When the absolute position system is configured, the MR-J3BAT battery is not required.

(a) Absolute type

Item	Specifications	
Model	LC491M	LC192M
System	Photoelectric scanning system	
Effective measurement length	70 to 2040mm	140 to 4240mm
Resolution	0.05μm	
Accuracy grade (20 (68) [℃ (℉)])	±5μm ±3μm (up to effective measurement length 1240)	±5μm ±3μm (up to effective measurement length 3040)
Supply power voltage	5V±5% on the linear encoder side	
Current consumption	Max.300mA	
Rated response speed	2.0m/s	3.0m/s
Maximum response speed	2.0m/s	3.0m/s
Operating temperature range	0 to 50℃ (32 to 122℉) (non-freezing)	
Storage temperature range	−20 to 70℃ (−4 to 158℉) (non-freezing)	
Dust tightness・water tightness	IP53 (when mounted according to the manual of the linear encoder manufactured by Heidenhain Corporation) IP64 (when filled with compressed air)	
Vibration resistance	100m/s^2 (DINIEC 68-2-6) without mounting spur 150m/s^2 (DINIEC 68-2-6) with mounting spur	
Shock resistance	150m/s^2 (DINIEC 68-2-6) (11ms)	
Required feeding force	5N or less	4N or less
Output signal	Serial communication compatibility	
Output cable	337 439-××(17 pin coupling), 573661-××(10 pins), etc.	
Load side encoder cable	Use the connection cable manufactured by Heidenhain Corporation. When fabricating, refer to (4) in this section.	

(b) Incremental type

Item	Specifications		
Model	LIDA485	LIDA487	
Serial interface conversion unit type name	APE391M		
System	Photoelectric scanning system		
Effective measurement length	140 to 30040mm	240 to 6040mm	
Resolution	0.05μm (20/4095μm) Resolution ratio of APE391M: 4096		
Accuracy grade (20 (68) [℃ (℉)]	±5μm		
Supply power voltage	5V±5%		
Current consumption	Max.200mA		Max.160mA
Rated response speed	4.0m/s		
Maximum response speed	8.0m/s		
Input signal	to $1V_{pp}$		
Maximum available input frequency	400kHz		
Operating temperature range	0 to 50℃ (32 to 122℉) (non-freezing)		
Storage temperature range	−20 to 70℃ (−4 to 158℉) (non-freezing)		
Dust tightness・water tightness	IP50		
Vibration resistance	$100m/s^2$ (IEC 60 068-2-6) (55 to 2000Hz)		$100m/s^2$
Shock resistance	$500m/s^2$ (IEC 60 068-2-27) (11ms)		$200m/s^2$
Output signal	Serial communication compatible (Z-phase information included) (Note)		
Output cable	Head cable (standard accessory) 3m + Serial interface conversion unit (option manufactured by Heidenhain (APE391M)) 0.5m		
Load side encoder cable	630 856-××(Option manufactured by Heidenhain) When fabricating, refer to (5) in this section.		

Note. When the linear encoder home position (reference mark) does not exist, a home position return cannot be made.

(2) Linear encoder unit structure

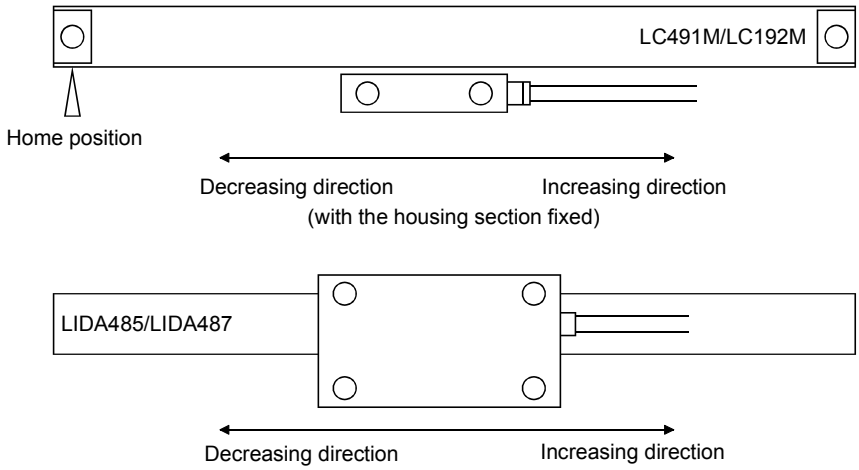

(3) Outline Drawings

POINT
・For the outline drawings of LIDA485, contact with HEIDENHAIN CORPORATION.

(a) LC491M (Absolute type)

[Unit: mm]

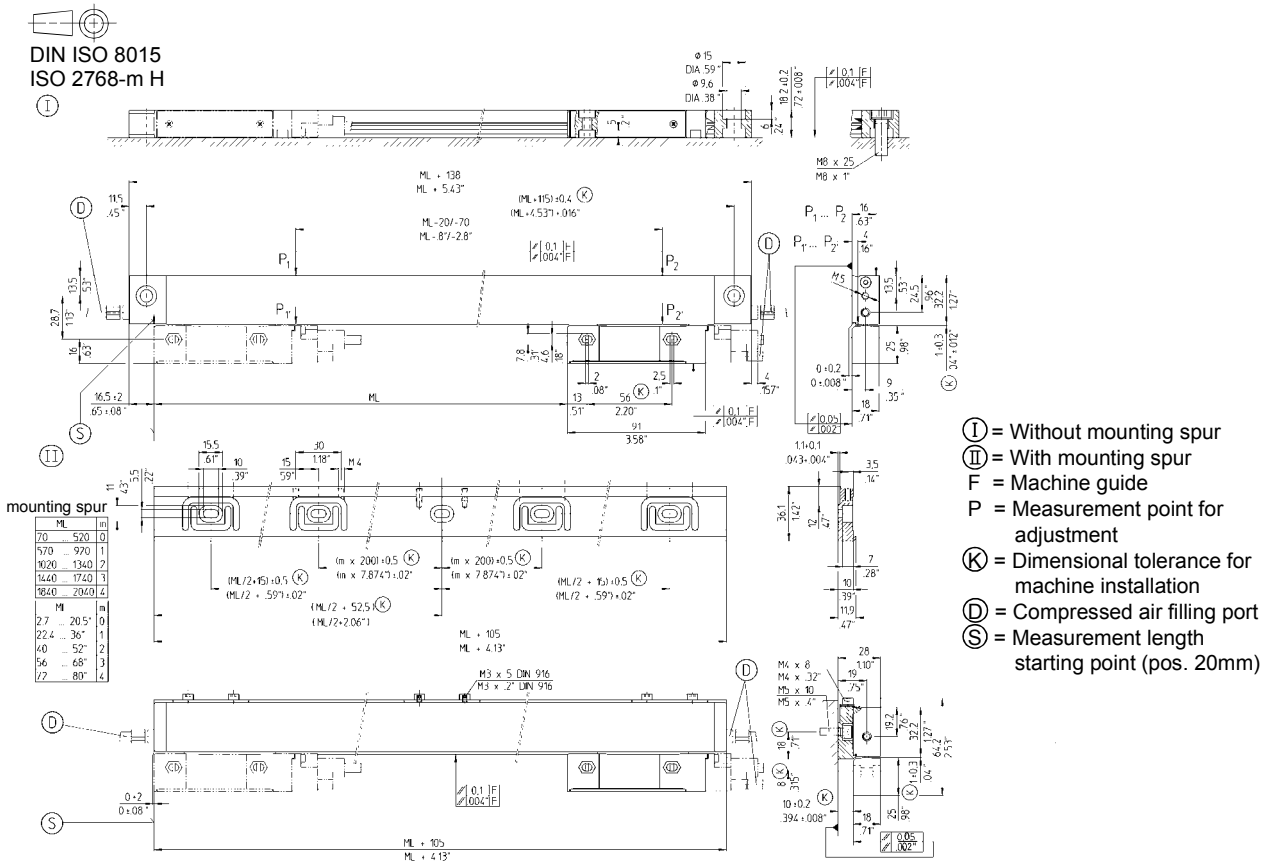

(b) LC192M (Absolute type)

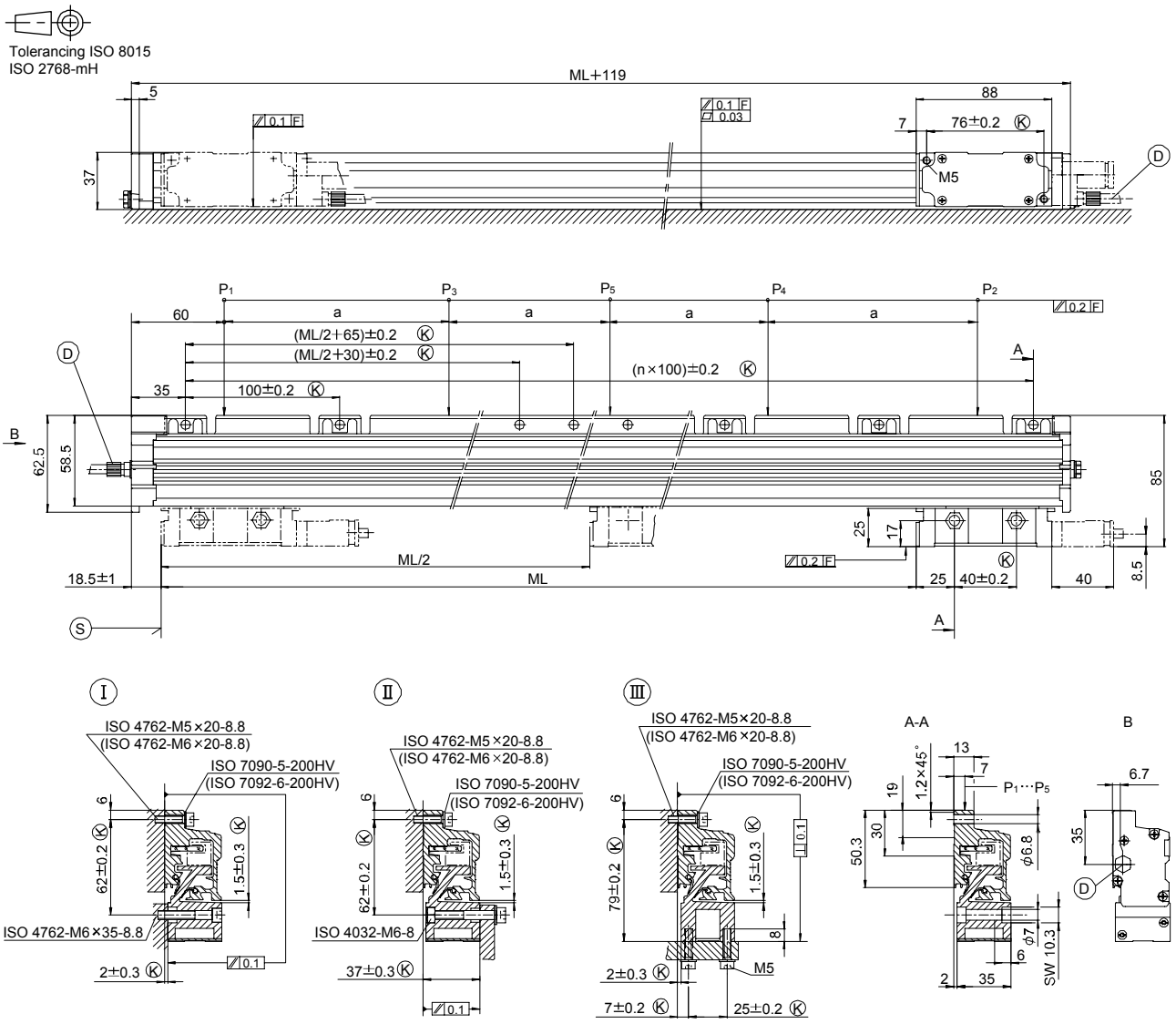

Ⅰ Ⅱ Ⅲ = Example of scanning head installation
F = Machine guide
P = Measurement point for adjustment
Ⓚ = Dimensional tolerance for machine installation
Ⓓ = Compressed air filling port
Ⓢ = Measurement length starting point (ML)

ML	Pn
≤ 840mm	P_1 · · · P_2
≤ 1740mm	P_1 · · · P_3
≤ 3040mm	P_1 · · · P_4
≤ 4240mm	P_1 · · · P_5

(c) LIDA487 (Incremental type)

[Unit: mm]

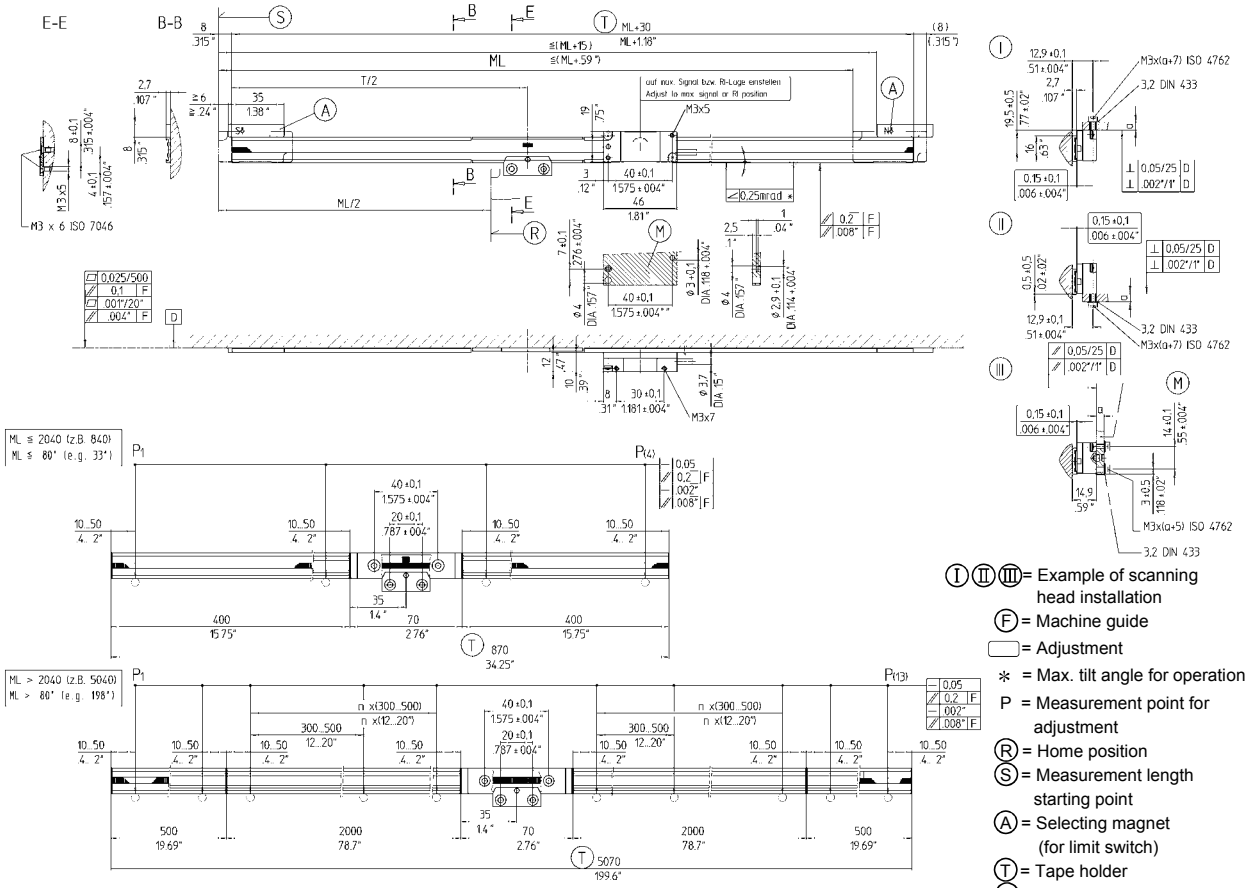

(4) Encoder cable

(a) For LC491M or LC192M (Absolute type)

POINT
・This linear encoder is of four-wire type. When using any of these encoder, set parameter No.PC26 to "1□□□" to select the four-wire type.

1) Cable structure

Prepare a cable based on the following structure diagram.

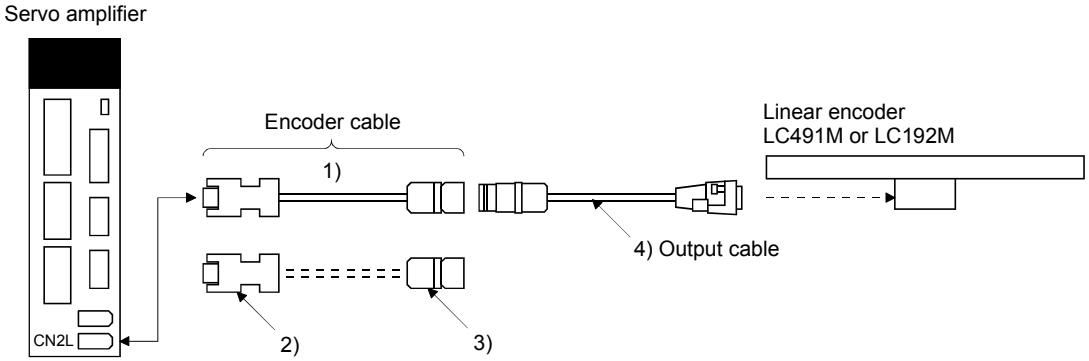

	Cable			
	Encoder cable		Output cable	
			LC491M	LC192M
When using an optional cable	1) Option manufactured by Heidenhain Corporation (This should be prepared by the customer.) (Note)		4) 337 439-××・・・ □m (manufactured by Heidenhain Corporation) (This should be prepared by the customer.)	4) 343 421-××・・・ □m (manufactured by Heidenhain Corporation) (This should be prepared by the customer.)
When producing a load side encoder cable	2) Connector set MR-J3CN2 (Option manufactured by Mitsubishi Electric Corporation) (Refer to section 3.4.)	3) Junction connector (This should be prepared by the customer.) 17-pin coupling (female) 291697-26 (manufactured by Heidenhain Corporation)		

Note. For details, contact with Heidenhain Corporation.

2) Production of encoder cable

Produce the encoder cable using MR-J3CN2 or a junction connector as shown below. The encoder cable can be produced as the length of max. 30m. The following diagram shows a connecting example of more than 5m to 10m.

Connector set (option)
MR-J3CN2
Receptacle: 36210-0100PL
Shell kit: 36310-3200-008
(3M)

Pin layout is one of the following.

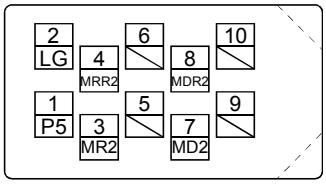

View seen from wiring side.

Connector set: 54599-1019
(Molex)

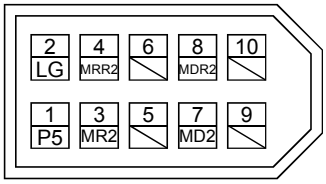

View seen from wiring side.

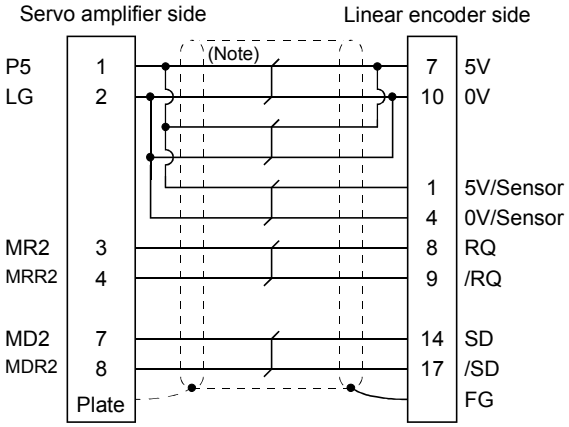

Note. The following table shows the cable size to be used and the number of paired connections of LG and P5.

Wiring length	Number of LG and P5 connections (when the output cable is 1m or less)	Cable size
to 5m	2-pair	AWG22
to 10m	3-pair	
to 20m	5-pair	
to 30m	7-pair	

(b) For LIDA485 or LIDA487 (Incremental type)

1) Cable structure

Prepare a cable based on the following structure diagram.

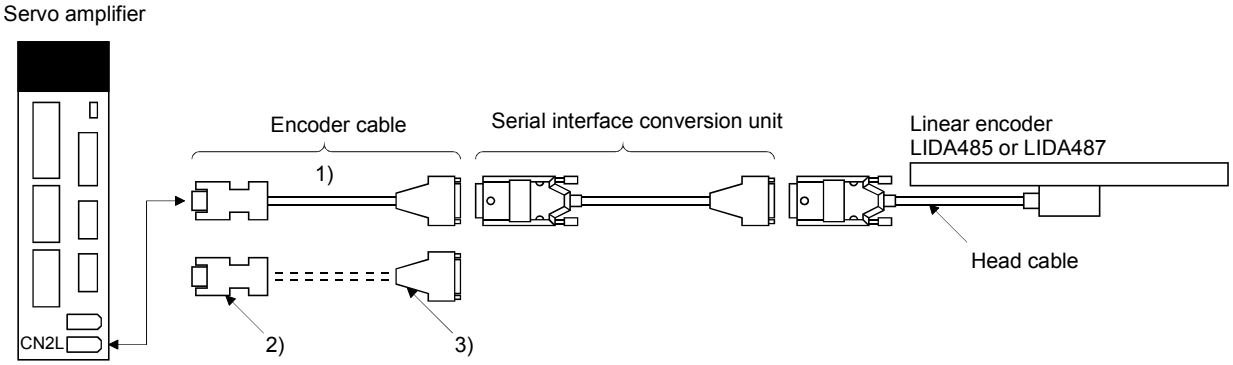

	Cable			
	Encoder cable		Serial interface conversion unit	Head cable
When using an optional cable	1) Option manufactured by HEIDENHAIN CORPORATION 630 856-××・・・□m (This should be prepared by the customer.) (Note)		APE391M Cable length: 0.5m (manufactured by Heidenhain Corporation) (This should be prepared by the customer.)	Accessories for linear encoder Cable length: 3m
When producing a load side encoder cable	2) Connector set MR-J3CN2 (Option manufactured by Mitsubishi Electric Corporation) (Refer to section 3.4.)	3) Junction connector (This should be prepared by the customer.) D-SUB15 pin (female)		

Note. For details, contact with Heidenhain Corporation.

2) Production of encoder cable

Produce the encoder cable using MR-J3CN2 or a junction connector as shown below. The encoder cable can be produced as the length of max. 30m. The following diagram shows a connecting example of more than 5m to 10m.

Connector set (option)
MR-J3CN2
Receptacle: 36210-0100PL
Shell kit: 36310-3200-008
(3M)

Pin layout is one of the following.

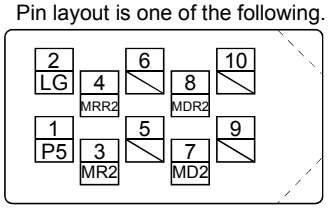

View seen from wiring side.

Connector set: 54599-1019
(Molex)

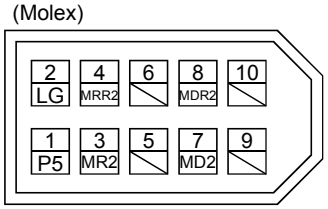

View seen from wiring side.

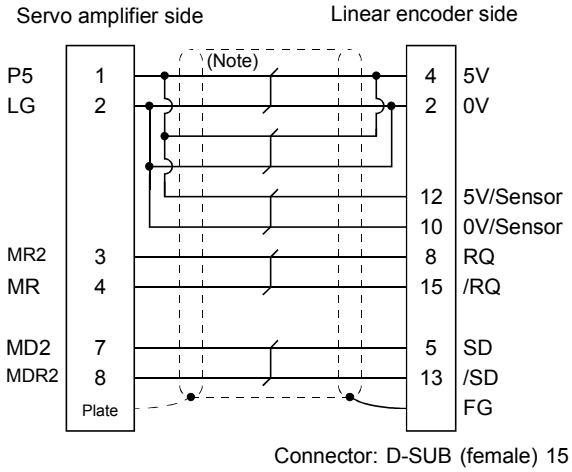

Note. The following table shows the cable size to be used and the number of paired connections of LG and P5.

Wiring length	Number of LG and P5 connections	Cable size
to 5m	2-pair	AWG22
to 10m	3-pair	
to 20m	6-pair	
to 30m	8-pair	

3.2.3 Linear encoder manufactured by Sony Manufacturing Systems Corporation (Incremental type)

(1) Specifications

Item	Specifications			
Interpolator model	MJ830/MJ831		MJ830/MJ831	
Linear encoder model		SL710+PL101-R/RH		SH13
System	Magnetic detection system		Optical detection system	
Effective measurement length	50 to 3000mm		70 to 1240mm	
Resolution	Min. 0.2μm (Note 1)		Min. 0.005μm (Note 1)	
Accuracy	±10μm		±3μm A3 ±5μm A5	
Supply power voltage	MJ830: 5V (4.5 to 5.5V) MJ831: 12 to 24V (11 to 32V)		5V (4.5 to 5.5V) (Note 1)	
Power consumption	Max.3W		Max.3W	
Rated response speed	6.4 m/s		1.4 m/s	
Maximum response speed	6.4 m/s		2.0 m/s	
Operating temperature range	0 to 55℃ (32 to 131℉) (non-freezing)	0 to 45℃ (32 to 113℉) (non-freezing)	0 to 55℃ (32 to 131℉) (non-freezing)	0 to 45℃ (32 to 113℉) (non-freezing)
Storage temperature range	−20 to 65℃ (−4 to 149℉) (non-freezing)	−20 to 50℃ (−4 to 122℉) (non-freezing)	−20 to 65℃ (−4 to 149℉) (non-freezing)	−10 to 60℃ (14 to 140℉) (non-freezing)
Dust tightness・water tightness	No protective structure	IP50 (PL101R), IP64 (PL101RH)	No protective structure	IP53 (in accordance with the mounting in the manual of the linear encoder manufactured by Sony Manufacturing systems Corporation)
Vibration resistance	9.6m/s^2 5 to 800Hz	20m/s^2 50 to 2000Hz	9.6m/s^2 5 to 800Hz	98m/s^2 (30 to 1000Hz, 30 minutes)
Shock resistance	980m/s^2 11ms	980m/s^2 11ms	980m/s^2 11ms	294m/s^2 (11ms, three directions XYZ,three times each)
Output signal	Serial communication compatibility (Z-phase data included) (Note 2)		Serial communication compatibility (Z-phase data included) (Note 2)	
Output extension cable		CK-T1□		CR4-05NNt0□, CR4-10NNT01 (10m)
Connection cable	Refer to (4) in this section and fabricate the cable		Refer to (4) in this section and fabricate the cable	

Note 1. Changes depending on the setting of the interpolator.

2. A home position return cannot be made if there is no linear encoder home position (reference mark).

(2) Linear encoder unit structure

Note that the increasing/decreasing directions change depending on the interpolator (MJ830/MJ831) settings. The following figure shows the moving direction when the MODE switch of the interpolator (MJ830/MJ831) is set to 5.

Always set an linear encoder home position (reference mark).

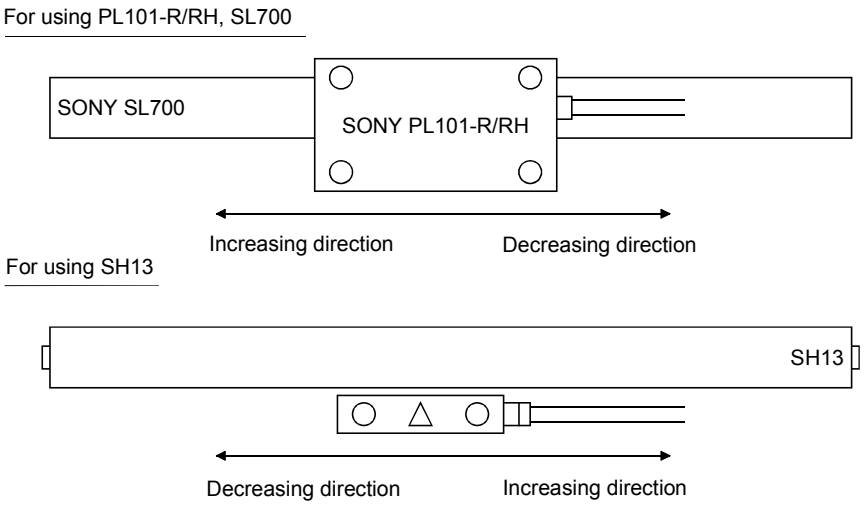

(3) Outline drawing

(a) SL710

[Unit: mm]

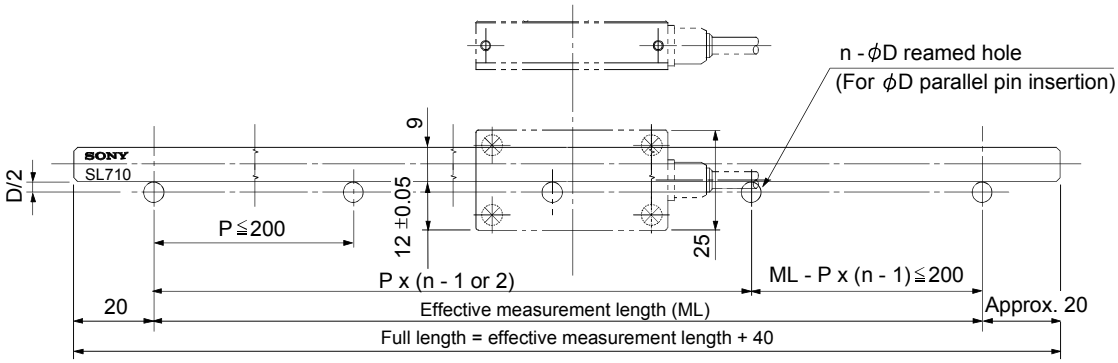

Mount the scale on a non-magnetic material.
When mounting it on a magnetic material, provide a non-magnetic layer of 3mm or more.

(b) PL101

[Unit: mm]

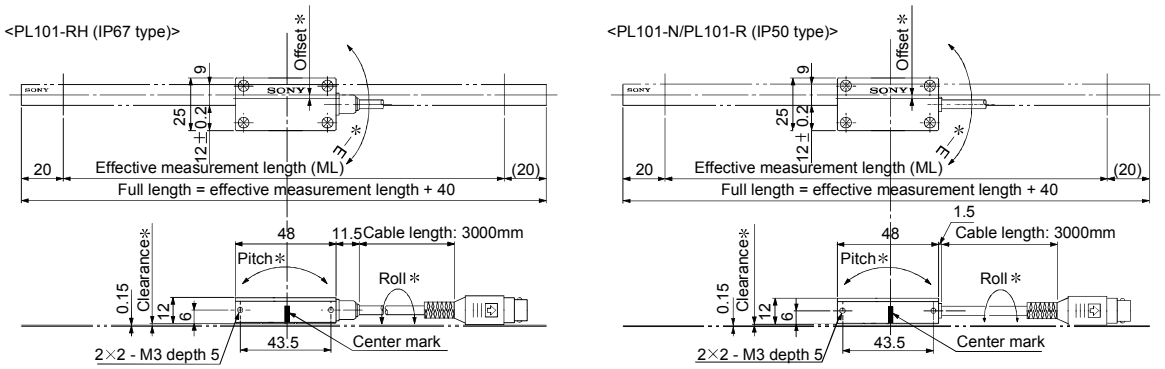

(c) SH13

[Unit: mm]

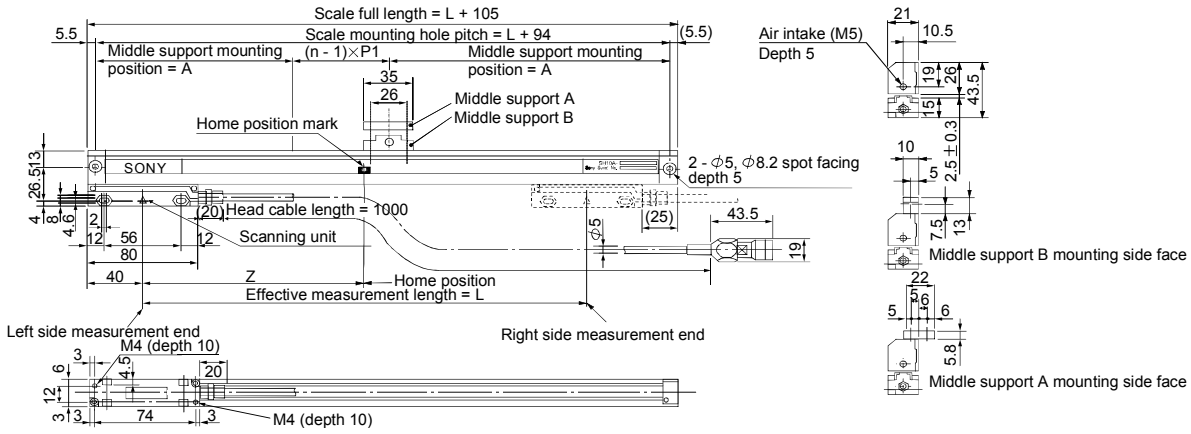

SH13			007	012	017	022	027	032	037	042	047	052	057	062	067	072	077	082	092	102	114	124
Effective measurement length	L	mm	70	120	170	220	270	320	370	420	470	520	570	620	670	720	770	820	920	1020	1140	1240
Middle support	n											1	1	1	1	1	1	1	1	2	2	2
Middle support mounting hole pitch	A	mm										307	322	357	382	407	432	457	507	380	420	450
	P1	mm																		354	394	434
Home position	Z	mm	35	60	85	110	135	160	185	210	235	260	285	310	335	360	385	410	460	510	570	620

(d) MJ830/MJ831

[Unit: mm]

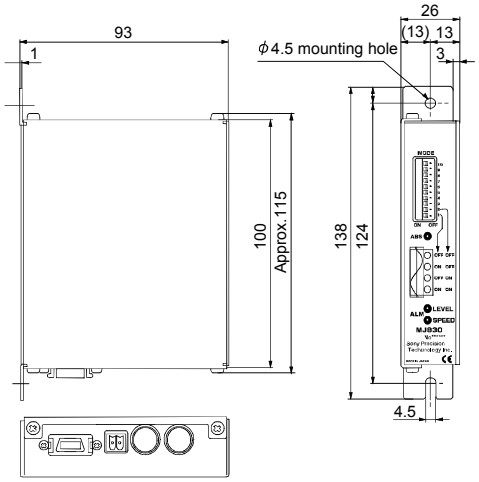

(4) Encoder cable

1) Cable structure

POINT
・When turning on the power, turn on the interpolator and then turn on the servo amplifier. When turning off the power, turn off the servo amplifier and then turn off the interpolator.

Prepare a cable based on the following structure diagram.

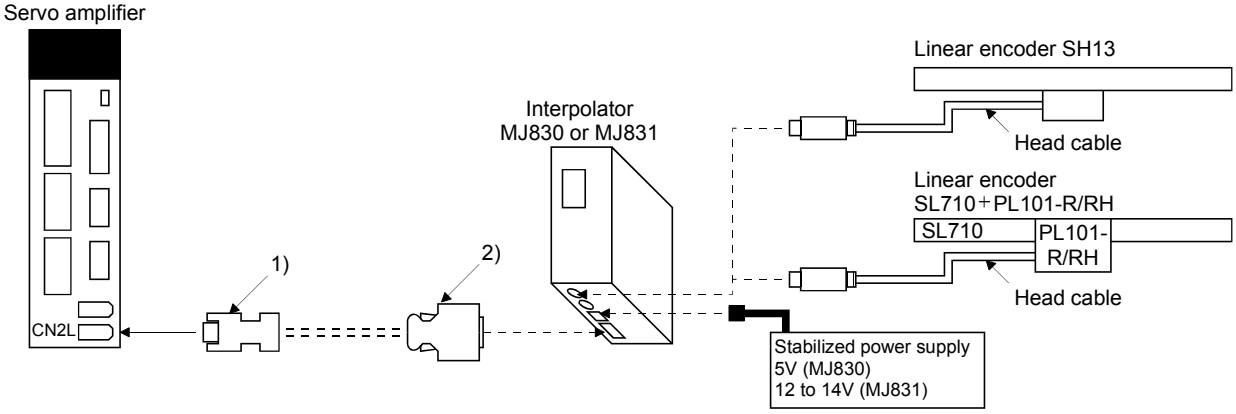

Linear encoder	Cable			Interpolator (This should be prepared by the customer.)
	Encoder cable (Note)		Head cable	
SL710＋PL101-R/RH	1) Connector set MR-J3CN2 (Option manufactured by Mitsubishi Electric Corporation) (Refer to section 3.4.)	2) Connector for Interpolator (This should be prepared by the customer.) Connector: 10114-3000PE Shell kit: 10314-52F0-008 (3M or equivalent)	Accessories for linear encoder Cable Length PL101-R: 0.3m PL101-RH: 3m	MJ830 or MJ831
SH13			Accessories for linear encoder Cable length: 1m	

Note. Produce an encoder cable. An optional cable is not provided.

2) Production of encoder cable

Produce the encoder cable using MR-J3CN2 or a connector for interpolator as shown below. The encoder cable can be produced as the length of max. 30m. Supply linear encoder power from external.

Connector set (option)
MR-J3CN2
Receptacle: 36210-0100PL
Shell kit: 36310-3200-008
(3M)

Pin layout is one of the following.

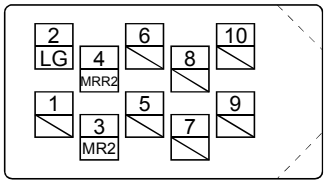

View seen from wiring side.

Connector set: 54599-1019
(Molex)

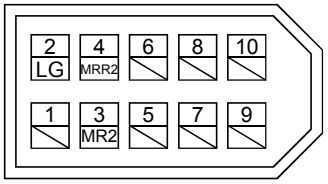

View seen from wiring side.

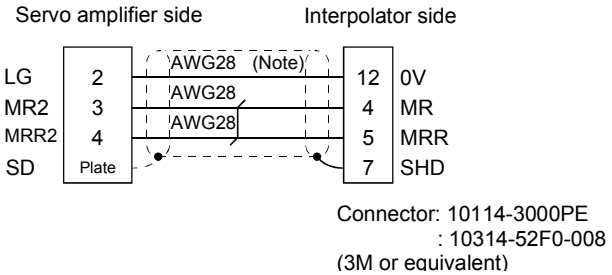

Connector: 10114-3000PE
: 10314-52F0-008
(3M or equivalent)

Note. Connect the LG of the servo amplifier to the 0V of the encoder.
In addition, it is not necessary to increase the number of connections according to the wiring length.

3.2.4 Linear encoder manufactured by Renishaw Inc. (Incremental type)

(1) Specifications

Item	Specifications		
Model	RGH26P	RGH26Q	RGH26R
System	Optical system		
Effective measurement length	Maximum length 70000mm		
Resolution	5μm	1μm	0.5μm
Accuracy (20 (68) [℃ (℉)]	±3μm/m (when compensation is made between two points)		
Supply power voltage	5V±5%		
Current consumption	Max.230mA		
Rated response speed (Note 1)	4.0m/s	3.2m/s	1.6m/s
Maximum response speed	5.0m/s	4.0m/s	2.0m/s
Operating temperature range	0 to 55℃ (32 to 131℉) (non-freezing)		
Operating humidity range	10 to 90%RH (non-condensing)		
Storage temperature range	−20 to 70℃ (−4 to 158℉) (non-freezing)		
Dust tightness・water tightness	IP50		
Vibration resistance	100m/s^2 (55 to 2000Hz)		
Shock resistance	1000m/s^2 (1/2sin, 11ms)		
Output signal	Serial communication compatibility (Z-phase data included, serial communication of reference mark data is also is made) (Note 2)		
Output cable	N-15 PIN Dtype plug (0.5m) manufactured by Renishaw Inc.		
Load side encoder cable	Refer to (4) in this section and fabricate the cable.		

Note 1. Use at the rated speed or less.
2. A home position return cannot be made if there is no linear encoder home position (reference mark).

(2) Linear encoder unit structure

Always set an linear encoder home position (reference mark).

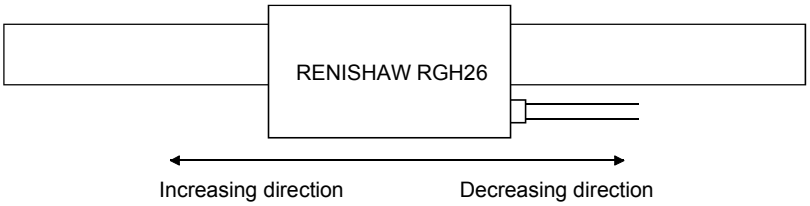

(3) RGH26P, RGH26Q, RGH26R outline drawing

[Unit: mm]

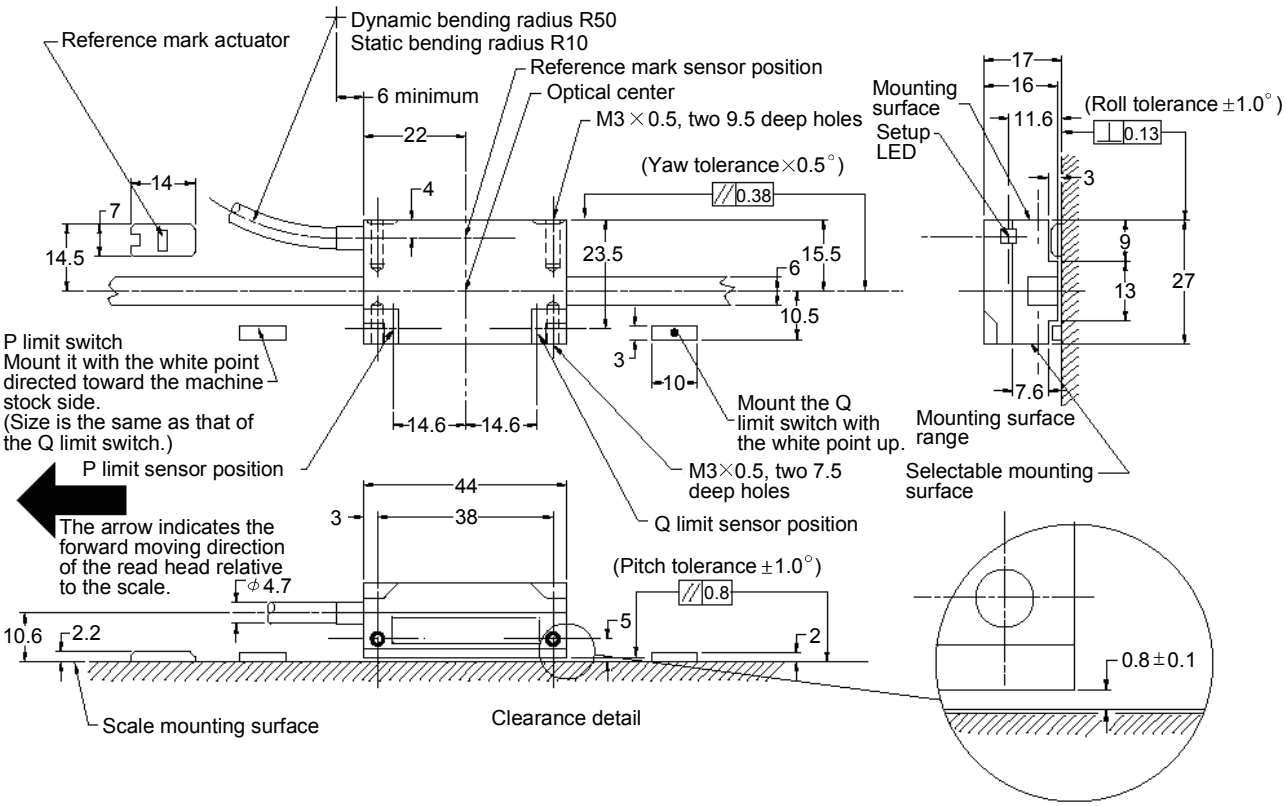

(4) Encoder cable

1) Cable structure

Prepare a cable based on the following structure diagram.

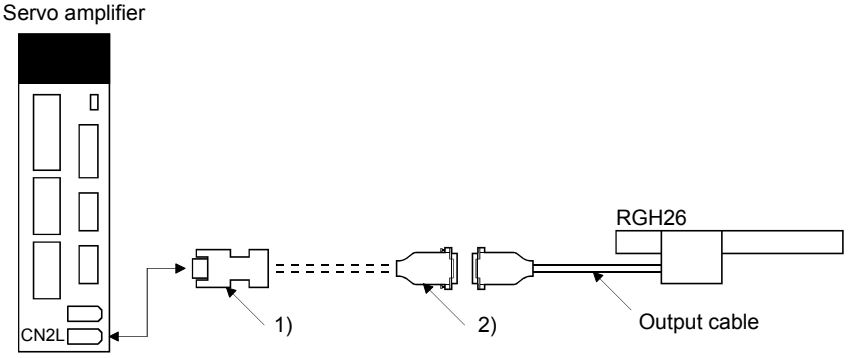

Cable		
Encoder cable		Output cable
1) Connector set (Option manufactured by Mitsubishi Electric Corporation) (Refer to section 3.4.)	2) Junction connector (This should be prepared by the customer.) D-SUB15 pin (female)	Accessories for linear encoder Cable Length 0.5m

Note. Produce an encoder cable. An optional cable is not provided.

2) Production of encoder cable

Produce the encoder cable using MR-J3CN2 or a junction connector as shown below. The encoder cable can be produced as the length of max. 30m.

Connector set (option)
MR-J3CN2
Receptacle: 36210-0100PL
Shell kit: 36310-3200-008
(3M)

Pin layout is one of the following.

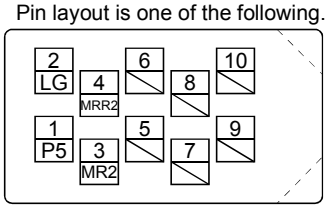

View seen from wiring side.

Connector set: 54599-1019
(Molex)

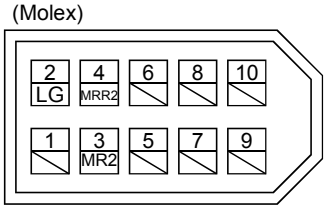

View seen from wiring side.

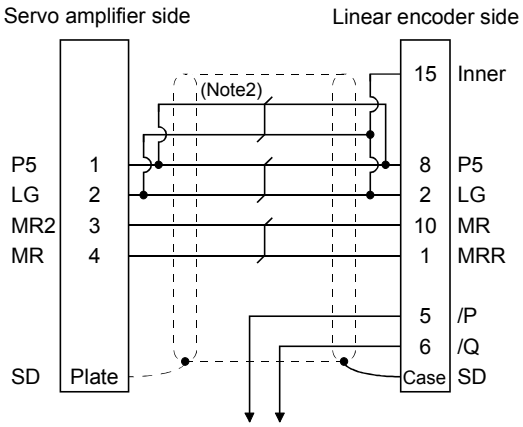

(Note 1) Limit switch output

Connector: D-SUB (female) 15 pin

Note 1. A limit switch output signal can be connected. For details, contact with Renishaw Inc.

2. The following table shows the cable size to be used and the number of paired connections of LG and P5.

Wiring length	Number of LG and P5 connections (when the output cable is 0.5m or less)	Cable size
to 5m	1-pair	AWG22
to 10m	2-pair	
to 20m	4-pair	
to 30m	6-pair	

3.3 ABZ-phase differential output encoder

This section describes the connection of the ABZ-phase differential output encoder. Prepare the MR-J3CN2 connector set for the encoder cable and produce it according to the wiring diagram in (3) in this section.

(1) ABZ-phase differential output encoder specifications

Each signal of the A-, B- and Z-phase of the encoder is provided in the differential line driver output. It cannot be provided in the collector output.

The phase differences of the A- and B-phase pulses and the pulse width of the Z-phase pulse need to be 200ns or more.

The encoder without the Z-phase cannot make a home position return.

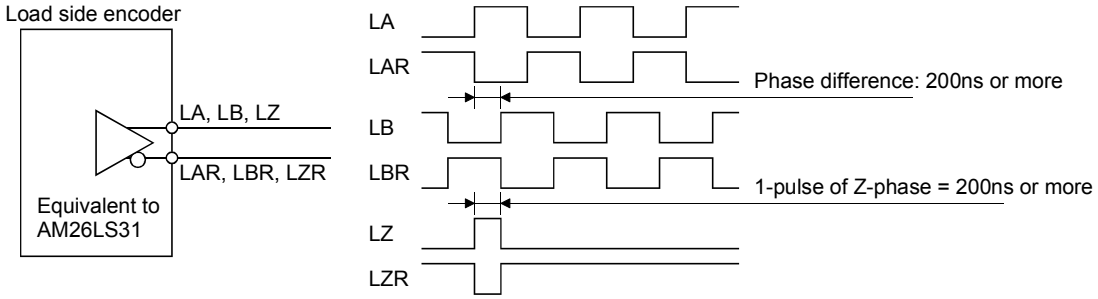

(2) Connection of servo amplifier and ABZ-phase differential output encoder

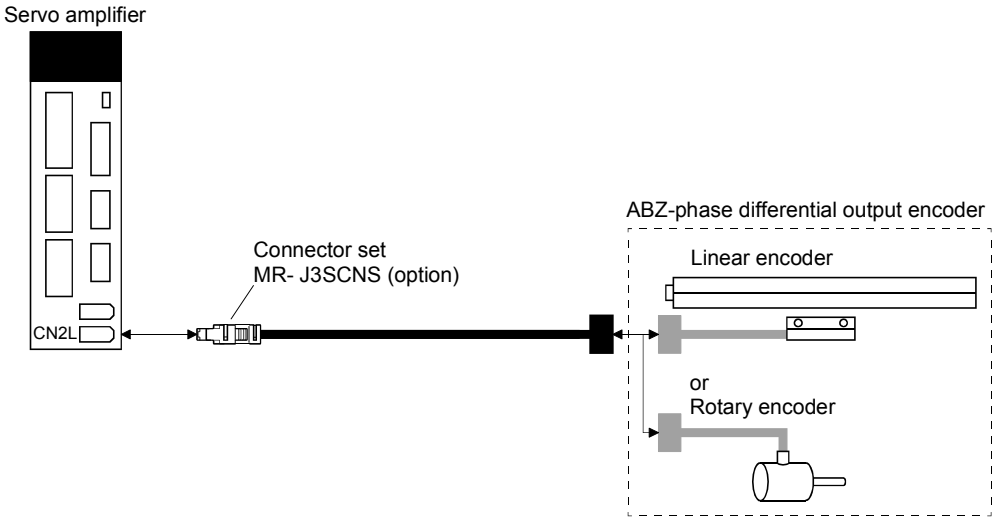

(3) Internal wiring diagram

For production of the load side encoder cable, use a cable durable against the long period of flexing action. Even though the cable length is max. 30m for the RS-422 communication, the length may be shortened due to the power supply voltage drop or the specifications of linear encoder.

A connection example is shown below. For details, contact with the encoder manufacturer.

1) When the consumption current of the encoder is 350mA or less

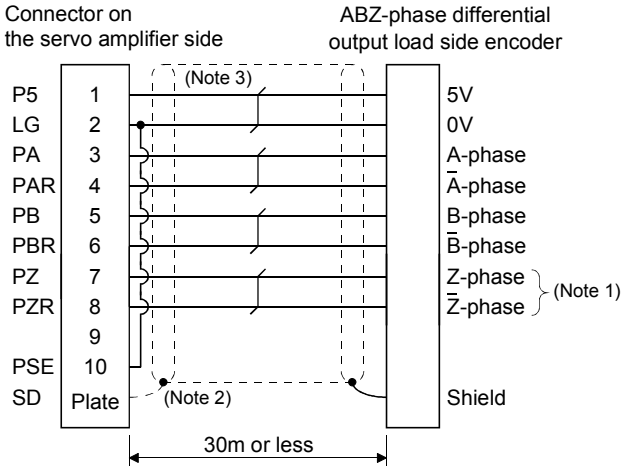

Note 1. For the load side encoder without Z-phase, set parameter No.PC27 to "□1□□".

2. Securely connect a shield cable to the plate (ground plate) in the connector.

3. The following table shows the cable size to be used and the number of paired connections of LG and P5 when the consumption current of the encoder is 350mA. When the consumption current of the encoder is 350mA or less, the paired connections can be decreased.

Wiring length	Number of LG and P5 connections	Cable size
to 5m	2-pair	AWG22
to 10m	3-pair	
to 20m	6-pair	
to 30m	8-pair	

2) When the consumption current of the encoder is more than 350mA

POINT
・When turning on the power, turn on the linear encoder and then turn on the servo amplifier. When turning off the power, turn off the servo amplifier and then turn off the linear encoder.

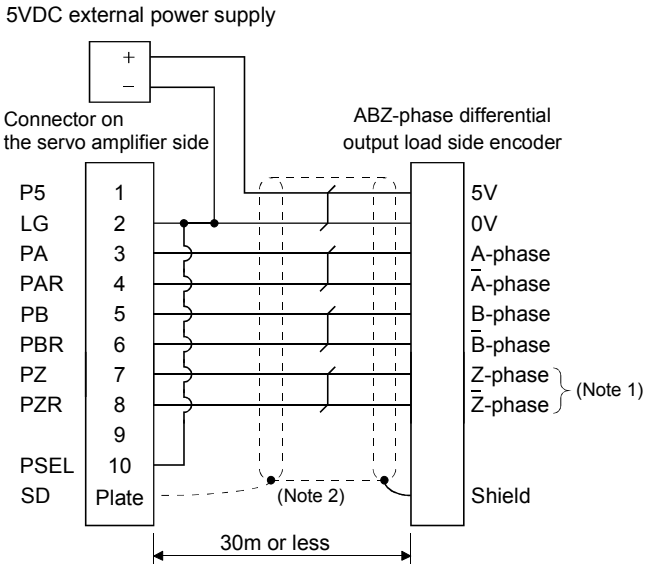

Note 1. For the load side encoder without Z-phase, set parameter No.PC27 to "□1□□".
2. Securely connect a shield cable to the plate (ground plate) in the connector.

3.4 Mitsubishi optional cable・connector sets

POINT

・Protective structure indicated for cables and connecters is for a cable or connector alone. When the cables and connectors are used to connect the servo amplifier and servo motor, and if protective structures of the servo amplifier and servo motor are lower than that of the cable and connector, specifications of the servo amplifier and servo motor apply.

3.4.1 MR-EKCBL□M-H

(1) Model explanations

Model : MR－EKCBL□M－H

Long flex life

Symbol	Cable length [m]
2	2
5	5
10	10

(2) Cable structure

The table shows this optional cable structure.

Protective structure	Flex life	Length [m]	Core size [mm^2]	Number of cores	Characteristics of one core			(Note 2) Finishing OD [mm]	Wire model
					Structure [Wires/mm]	Conductor resistance [Ω/mm]	Insulation coating OD d [mm] (Note 1)		
IP20	Long flex life	2・5・10	0.2mm^2	12 (6 pairs)	40/0.08	105 or less	0.88	7.2	(Note 3) A14B2339 6P

Note 1. d is as shown below.

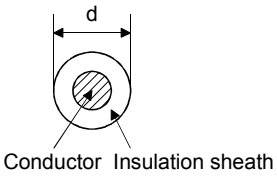

2. Standard OD. Max. OD is about 10% greater.
3. Purchased from Toa Electric Industry.

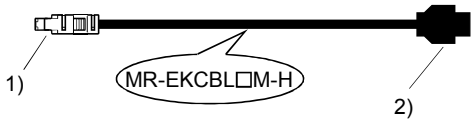

Cable model	1) CN2 connector	2) Junction connector
MR-EKCBL □ M-H	Connector set: 54599-1019 (Molex or equivalent) (Note) Signal layout 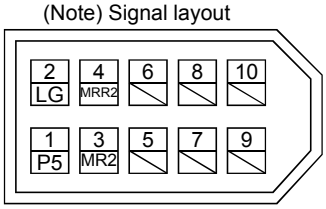 View seen from wiring side. Note. Keep open the pins shown with ▧. Especially, pin 10 is provided for manufacturer adjustment. If it is connected with any other pin, the servo amplifier cannot operate normally.	Housing: 1-172161-9 Connector pin: 170359-1 (Tyco Electronics or equivalent) Cable clamp: MTI-0002 (Toa Electric Industries) Signal layout 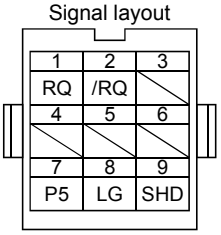 View seen from wiring side.

(3) Internal wiring diagram

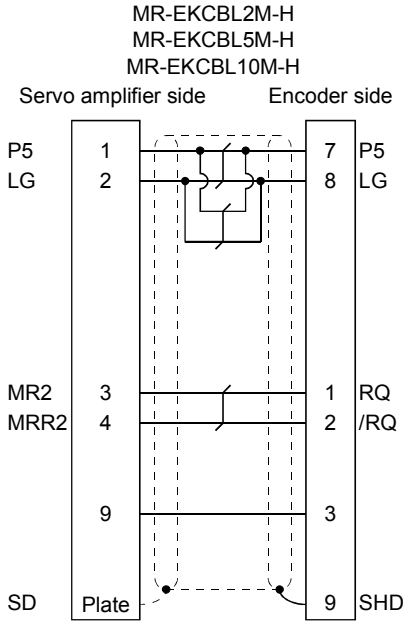

3.4.2 MR-ECNM

The following shows the connector combination for this connector set.

Parts/Tool	Description	
Connector set	MR-ECNM	
		
	For CN2 connector Connector set: 54599-1019 (Molex)	Junction connector Housing: 1-172161-9 Connector pin: 170359-1 (Tyco Electronics or equivalent) Cable clamp: MTI-0002 (Toa Electric Industries)

3.4.3 MR-J3CN2

The following shows the details of this connector set.

Connector set (option)
MR-J3CN2
Receptacle: 36210-0100PL
Shell kit: 36310-3200-008
(3M)

Connector set: 54599-1019
(Molex)

Pin layout is one of the following.

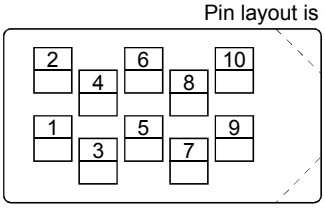

View seen from wiring side.

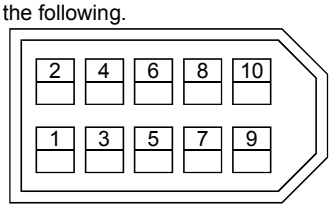

View seen from wiring side.

4. SIGNALS AND WIRING

WARNING

- Any person who is involved in wiring should be fully competent to do the work.
- Before wiring, turn off the power and wait for 15 minutes or more until the charge lamp turns off. Then, confirm that the voltage between P(+) and N(−) is safe with a voltage tester and others. Otherwise, an electric shock may occur. In addition, always confirm from the front of the servo amplifier whether the charge lamp is off or not.
- Ground the servo amplifier and the linear servo motor securely.
- Do not attempt to wire the servo amplifier and linear servo motor until they have been installed. Otherwise, you may get an electric shock.
- The cables should not be damaged, stressed excessively, loaded heavily, or pinched. Otherwise, you may get an electric shock.

CAUTION

- Wire the equipment correctly and securely. Otherwise, the linear servo motor may misoperate, resulting in injury.
- Connect cables to correct terminals to prevent a burst, fault, etc.
- Ensure that polarity (+, −) is correct. Otherwise, a burst, damage, etc. may occur.
- The surge absorbing diode installed to the DC relay designed for control output should be fitted in the specified direction. Otherwise, the signal is not output due to a fault, disabling the forced stop (EM1) and other protective circuits.

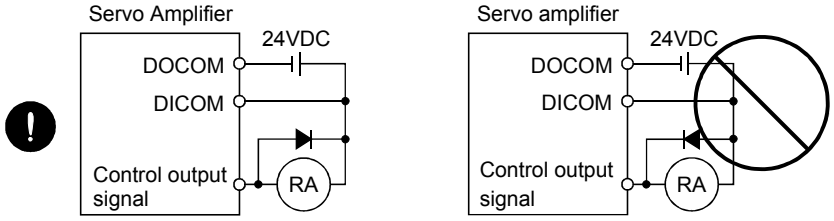

- Use a noise filter, etc. to minimize the influence of electromagnetic interference, which may be given to electronic equipment used near the servo amplifier.
- Do not install a power capacitor, surge suppressor or radio noise filter (FR-BIF option) with the power line of the linear servo motor.
- When using the regenerative resistor, switch power off with the alarm signal. Otherwise, a transistor fault or the like may overheat the regenerative resistor, causing a fire.
- During power-on, do not open or close the motor power line. Otherwise, a malfunction or faulty may occur.
- Do not modify the equipment.
- The cables such as power cables deriving from the primary side (coil) cannot stand the long-term flexing action. Avoid the flexing action by fixing to the movable part, etc. Also, use the cable that stands the long-term flexing action for the wiring to the servo amplifier.

4.1 Precautions on this chapter

The following items are not described in this chapter. For details of these items, refer to the MR-J3-□B Servo Amplifier Instruction Manual as they are the same as those of MR-J3-□B.

Item	MR-J3-□B Servo Amplifier Instruction Manual
Explanation of Power Supply System	Section 3.3
Signal (device) explanations	Section 3.5
Interfaces	Section 3.7 (excluding the internal connection diagram)
Processing of cable shield external conductor	Section 3.8
SSCNETⅢ cable connection	Section 3.9
Control axis selection	Section 3.13

4.2 Power supply system circuit connection example

⚠ CAUTION

- Always connect a magnetic contactor (MC) between the main circuit power supply and L_1, L_2, and L_3 of the servo amplifier, and configure the wiring to be able to shut down the power supply on the side of the servo amplifier's power supply. If a magnetic contactor (MC) is not connected, continuous flow of a large current may cause a fire when the servo amplifier malfunctions.
- Use the trouble (ALM) to switch power off. Otherwise, a regenerative transistor fault or the like may overheat the regenerative resistor, causing a fire.

POINT

- Even if alarm has occurred, do not switch off the control circuit power supply. When the control circuit power supply has been switched off, optical module does not operate, and optical transmission of SSCNETⅢ communication is interrupted. Therefore, the servo amplifier on the rear axis displays "AA" at the indicator and turns into base circuit shut-off. The servo amplifier stops with starting dynamic brake.
- For details of each signal, refer to section 3.3 of the MR-J3-□B Servo Amplifier Instruction Manual.

Wire the power supply/main circuit as shown below so that power is shut off and the servo-on command turned off as soon as an alarm occurs, a servo forced stop is made valid, or a controller forced stop is made valid. A no-fuse breaker (NFB) must be used with the input cables of the main circuit power supply.

4.2.1 Selection example of wires

POINT

- Selection condition of wire size is as follows.
  Construction condition: One wire is constructed in the air
  Wire length: 30m or less

(1) When using the 600V Polyvinyl chloride insulated wire (IV wire)
Selection example of wire size when using IV wires is indicated below.

Table 4.1 Wire size selection example 1 (IV wire)

<table>
<tr><th rowspan="2">Servo amplifier</th><th colspan="4">Wires [mm^2] (Note 1, 3)</th></tr>
<tr><th>1) L_1・L_2・L_3・⏚</th><th>2) L_{11}・L_{21}</th><th>3) U・V・W・⏚</th><th>4) P・C</th></tr>
<tr><td>MR-J3-10B-RJ004</td><td rowspan="7">2(AWG14)</td><td rowspan="8">1.25(AWG16)</td><td rowspan="5">1.25(AWG16)</td><td rowspan="8">2(AWG14)</td></tr>
<tr><td>MR-J3-20B-RJ004</td></tr>
<tr><td>MR-J3-40B-RJ004</td></tr>
<tr><td>MR-J3-60B-RJ004</td></tr>
<tr><td>MR-J3-70B-RJ004</td></tr>
<tr><td>MR-J3-100B-RJ004</td><td rowspan="2">2(AWG14)</td></tr>
<tr><td>MR-J3-200B-RJ004</td></tr>
<tr><td>MR-J3-350B-RJ004</td><td>3.5(AWG12)</td><td>3.5(AWG12)</td></tr>
<tr><td>MR-J3-500B-RJ004 (Note 2)</td><td>5.5(AWG10): a</td><td rowspan="2">1.25(AWG16): g</td><td>5.5(AWG10): a</td><td>2(AWG14): f</td></tr>
<tr><td>MR-J3-700B-RJ004 (Note 2)</td><td>8(AWG8): b</td><td>8(AWG8): b</td><td>3.5(AWG12): a</td></tr>
<tr><td>MR-J3-11KB-RJ004 (Note 2)</td><td>14(AWG6): c</td><td rowspan="3">1.25(AWG16): f</td><td>22(AWG4): d</td><td rowspan="2">5.5(AWG10): h</td></tr>
<tr><td>MR-J3-15KB-RJ004 (Note 2)</td><td>22(AWG4): d</td><td>30(AWG2): e</td></tr>
<tr><td>MR-J3-22KB4-RJ004 (Note 2)</td><td>14(AWG6): k</td><td>22(AWG4): l</td><td>5.5(AWG10): j</td></tr>
</table>

Note 1. Alphabets in the table indicate crimping tools. For crimping terminals and applicable tools, refer to (3) in this section.
2. When connecting to the terminal block, be sure to use the screws which are provided with the terminal block.
3. Wires are selected based on the highest rated current among combining servo motors.

(2) When using the 600V Grade heat-resistant polyvinyl chloride insulated wire (HIV wire)
Selection example of wire size when using HIV wires is indicated below.

Table 4.2 Wire size selection example 2 (HIV wire)

<table>
<tr><th rowspan="2">Servo amplifier</th><th colspan="4">Wires [mm^2] (Note 1, 3)</th></tr>
<tr><th>1) L_1・L_2・L_3・⏚</th><th>2) L_{11}・L_{21}</th><th>3) U・V・W・⏚</th><th>4) P・C</th></tr>
<tr><td>MR-J3-10B-RJ004</td><td rowspan="7">2(AWG14)</td><td rowspan="8">1.25(AWG16)</td><td rowspan="6">1.25(AWG16)</td><td rowspan="8">2(AWG14)</td></tr>
<tr><td>MR-J3-20B-RJ004</td></tr>
<tr><td>MR-J3-40B-RJ004</td></tr>
<tr><td>MR-J3-60B-RJ004</td></tr>
<tr><td>MR-J3-70B-RJ004</td></tr>
<tr><td>MR-J3-100B-RJ004</td><td>1.25(AWG16)</td></tr>
<tr><td>MR-J3-200B-RJ004</td><td>2(AWG14)</td></tr>
<tr><td>MR-J3-350B-RJ004</td><td>3.5(AWG12)</td><td>3.5(AWG12)</td></tr>
<tr><td>MR-J3-500B-RJ004 (Note 2)</td><td>5.5(AWG10): a</td><td rowspan="2">1.25(AWG16): g</td><td>5.5(AWG10): a</td><td rowspan="2">2(AWG14): f</td></tr>
<tr><td>MR-J3-700B-RJ004 (Note 2)</td><td>8(AWG8): b</td><td>8(AWG8): b</td></tr>
<tr><td>MR-J3-11KB-RJ004 (Note 2)</td><td>14(AWG6): c</td><td rowspan="2">1.25(AWG16): f</td><td>14(AWG6): c</td><td rowspan="2">3.5(AWG12): h</td></tr>
<tr><td>MR-J3-15KB-RJ004 (Note 2)</td><td>22(AWG4): d</td><td>22(AWG4): d</td></tr>
<tr><td>MR-J3-22KB4-RJ004 (Note 2)</td><td>14(AWG6): k</td><td></td><td>14(AWG6): k</td><td>3.5(AWG12): j</td></tr>
</table>

Note 1. Alphabets in the table indicate crimping tools. For crimping terminals and applicable tools, refer to (3) in this section.
2. When connecting to the terminal block, be sure to use the screws which are provided with the terminal block.
3. Wires are selected based on the highest rated current among combining servo motors.

(3) Selection example of crimping terminals
Selection example of crimping terminals for the servo amplifier terminal box when using the wires mentioned in (1) and (2) in this section is indicated below.

<table>
<tr><th rowspan="3">Symbol</th><th colspan="5">Servo amplifier side crimping terminals</th></tr>
<tr><th rowspan="2">(Note 2) Crimping terminal</th><th colspan="3">Applicable tool</th><th rowspan="2">Manufacturer</th></tr>
<tr><th>Body</th><th>Head</th><th>Dice</th></tr>
<tr><td>a</td><td>FVD5.5-4</td><td>YNT-1210S</td><td rowspan="2"></td><td rowspan="2"></td><td rowspan="15">Japan Solderless Terminal</td></tr>
<tr><td>(Note 1)b</td><td>8-4NS</td><td>YHT-8S</td></tr>
<tr><td>c</td><td>FVD14-6</td><td rowspan="2">YF-1・E-4</td><td rowspan="2">YNE-38</td><td>DH-112・DH122</td></tr>
<tr><td>d</td><td>FVD22-6</td><td>DH-113・DH123</td></tr>
<tr><td rowspan="2">(Note 1)e</td><td rowspan="2">38-6</td><td>YPT-60-21</td><td></td><td rowspan="2">TD-112・TD-124</td></tr>
<tr><td>YF-1・E-4</td><td>YET-60-1</td></tr>
<tr><td>f</td><td>FVD2-4</td><td rowspan="2">YNT-1614</td><td rowspan="4"></td><td rowspan="4"></td></tr>
<tr><td>g</td><td>FVD2-M3</td></tr>
<tr><td>h</td><td>FVD5.5-6</td><td rowspan="2">YNT-1210S</td></tr>
<tr><td>j</td><td>FVD5.5-8</td></tr>
<tr><td>k</td><td>FVD14-8</td><td rowspan="2">YF-1・E-4</td><td rowspan="2">YNE-38</td><td>DH-112・DH122</td></tr>
<tr><td>l</td><td>FVD22-8</td><td>DH-113・DH123</td></tr>
</table>

Note 1. Coat the part of crimping with the insulation tube.
2. Some crimping terminals may not be mounted depending on the size. Make sure to use the recommended ones or equivalent ones.

4.2.2 Connection example

(1) For 3-phase 200 to 230VAC power supply to MR-J3-40B-RJ004 to MR-J3-350B-RJ004

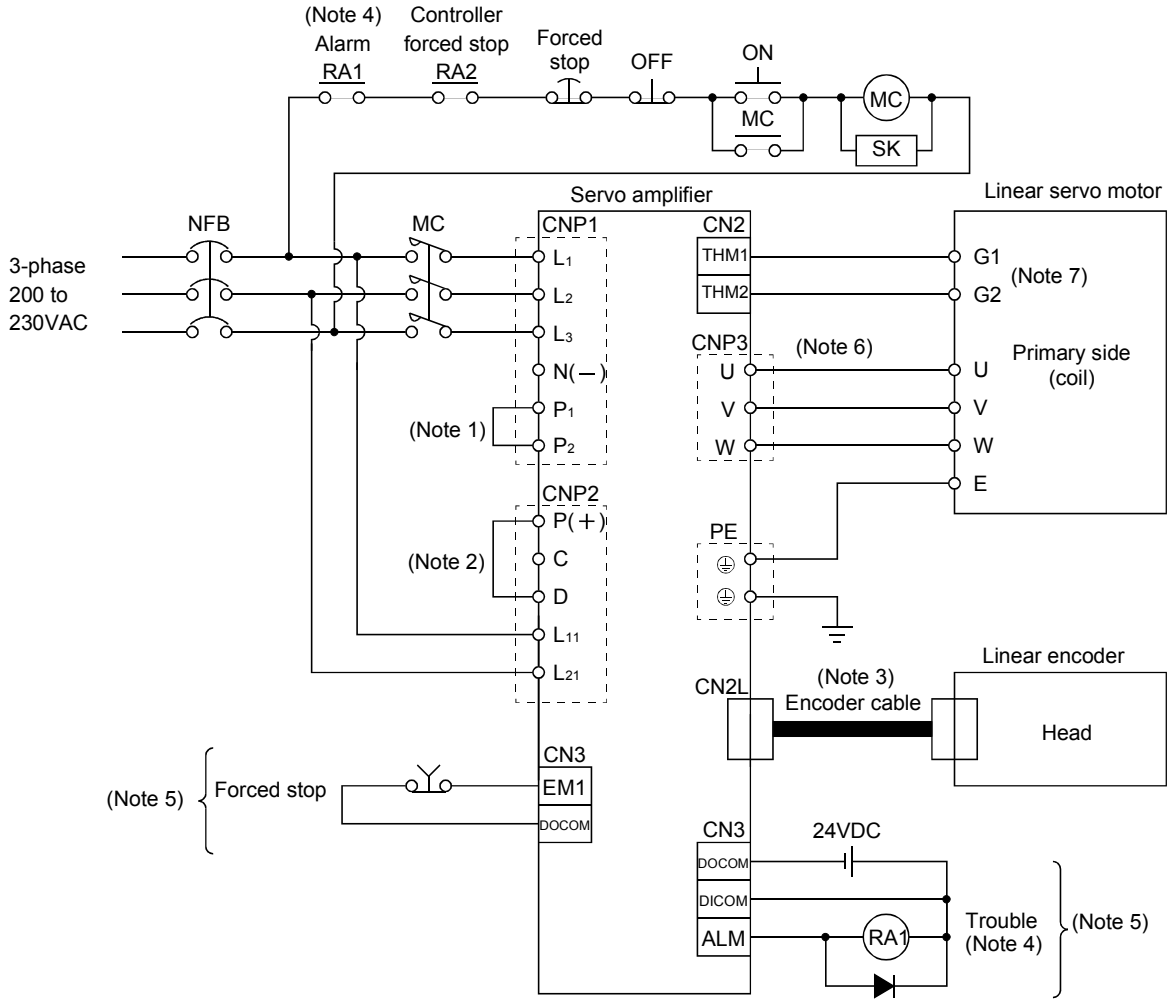

Note 1. Always connect P_1 and P_2. (Factory-wired.) When using the power factor improving DC reactor, refer to MR-J3-□B Servo Amplifier Instruction Manual chapter 11.
2. Always connect P(+) and D. (Factory-wired.) When using the regenerative option, refer to MR-J3-□B Servo Amplifier Instruction Manual chapter 11.
3. For the encoder cable, refer to the section on each linear encoder in chapter 3.
4. If deactivating output of trouble (ALM) with parameter change, configure up the power supply circuit which switches off the magnetic contactor after detection of alarm occurrence on the controller side.
5. For the sink I/O interface. For the source I/O interface, refer to MR-J3-□B Servo Amplifier Instruction Manual section 3.7.3.
6. For connection of the power supply, refer to the section on each linear servo motor in chapter 2.
7. There may not be a thermistor output.

(2) For 1-phase 200 to 230 VAC power supply to MR-J3-40B-RJ004 to MR-J3-70B-RJ004

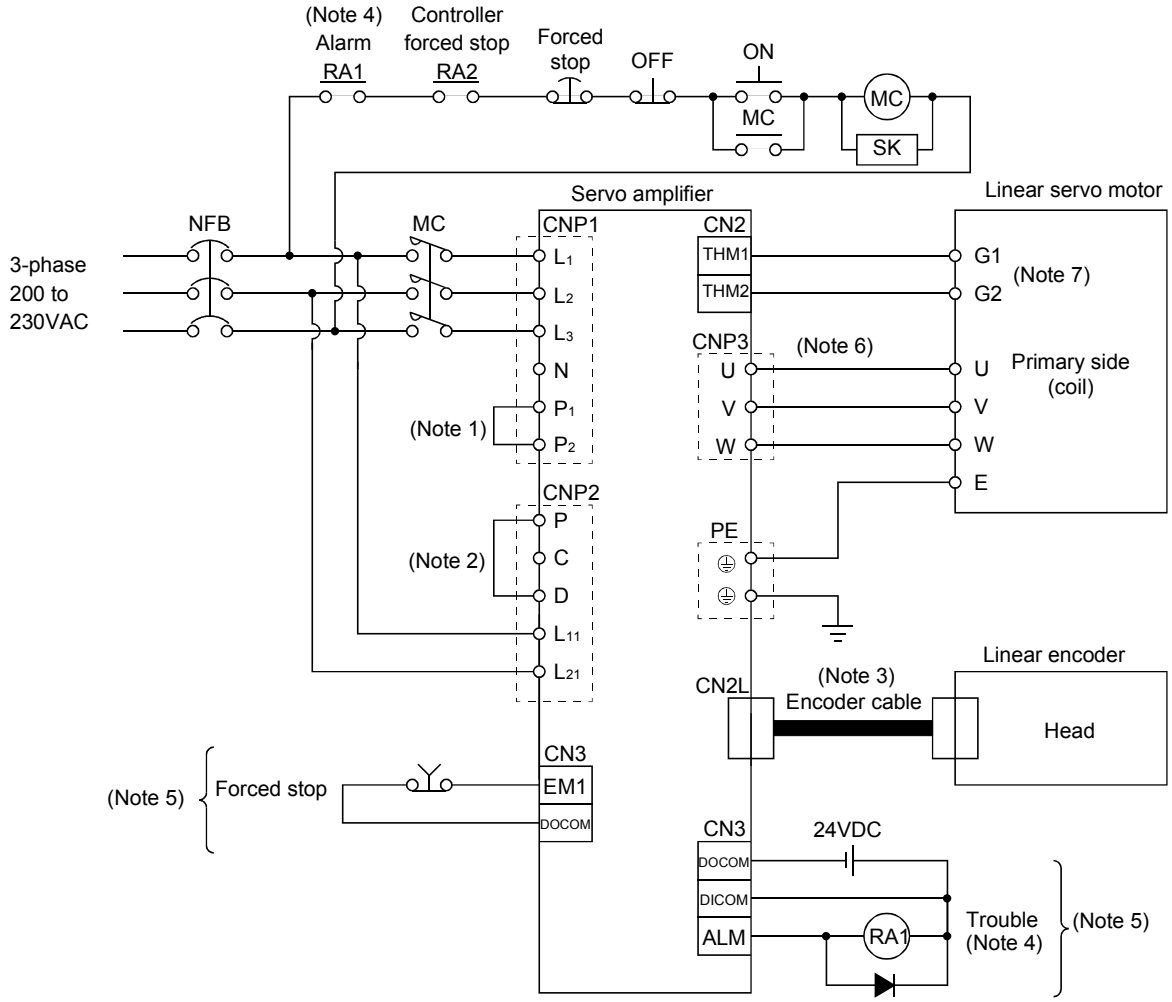

Note 1. Always connect P_1 and P_2. (Factory-wired.) When using the power factor improving DC reactor, refer to MR-J3-□B Servo Amplifier Instruction Manual chapter 11.

2. Always connect P and D. (Factory-wired.) When using the regenerative option, refer to MR-J3-□B Servo Amplifier Instruction Manual chapter 11.
3. For the encoder cable, refer to the section on each linear encoder in chapter 3.
4. If deactivating output of trouble (ALM) with parameter change, configure up the power supply circuit which switches off the magnetic contactor after detection of alarm occurrence on the controller side.
5. For the sink I/O interface. For the source I/O interface, refer to MR-J3-□B Servo Amplifier Instruction Manual section 3.7.3.
6. For connection of the power supply, refer to the section on each linear servo motor in chapter 2.
7. There may not be a thermistor output.

(3) MR-J3-500B-RJ004・MR-J3-700B-RJ004

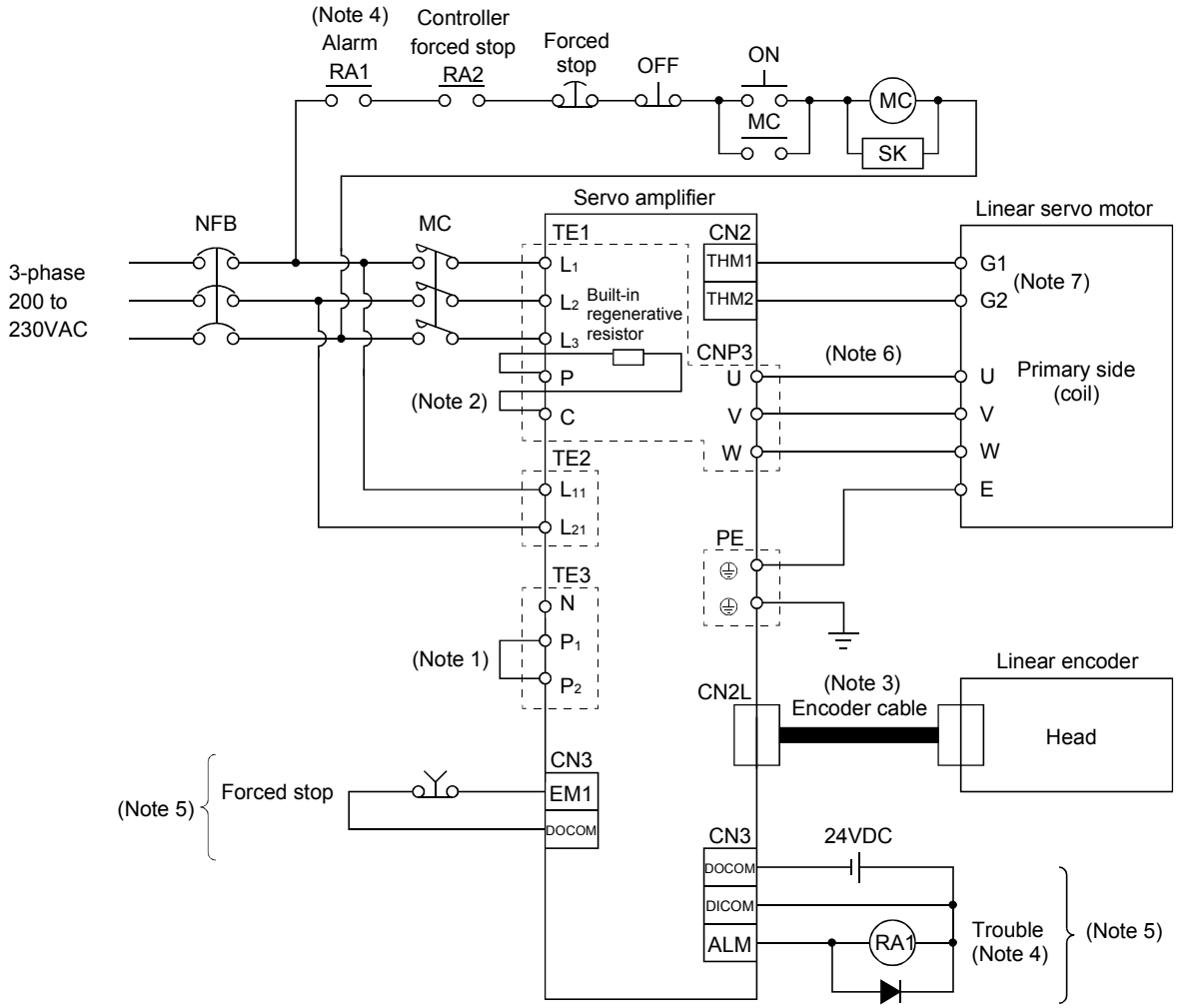

Note 1. Always connect P_1 and P_2. (Factory-wired.) When using the power factor improving DC reactor, refer to MR-J3-□B Servo Amplifier Instruction Manual chapter 11.

2. Always connect P and D. (Factory-wired.) When using the regenerative option, refer to MR-J3-□B Servo Amplifier Instruction Manual chapter 11.

3. For the encoder cable, refer to the section on each linear encoder in chapter 3.

4. If deactivating output of trouble (ALM) with parameter change, configure up the power supply circuit which switches off the magnetic contactor after detection of alarm occurrence on the controller side.

5. For the sink I/O interface. For the source I/O interface, refer to MR-J3-□B Servo Amplifier Instruction Manual section 3.7.3.

6. For connection of the power supply, refer to the section on each linear servo motor in chapter 2.

7. There may not be a thermistor output.

(4) MR-J3-11KB-RJ004・MR-J3-15KB-RJ004

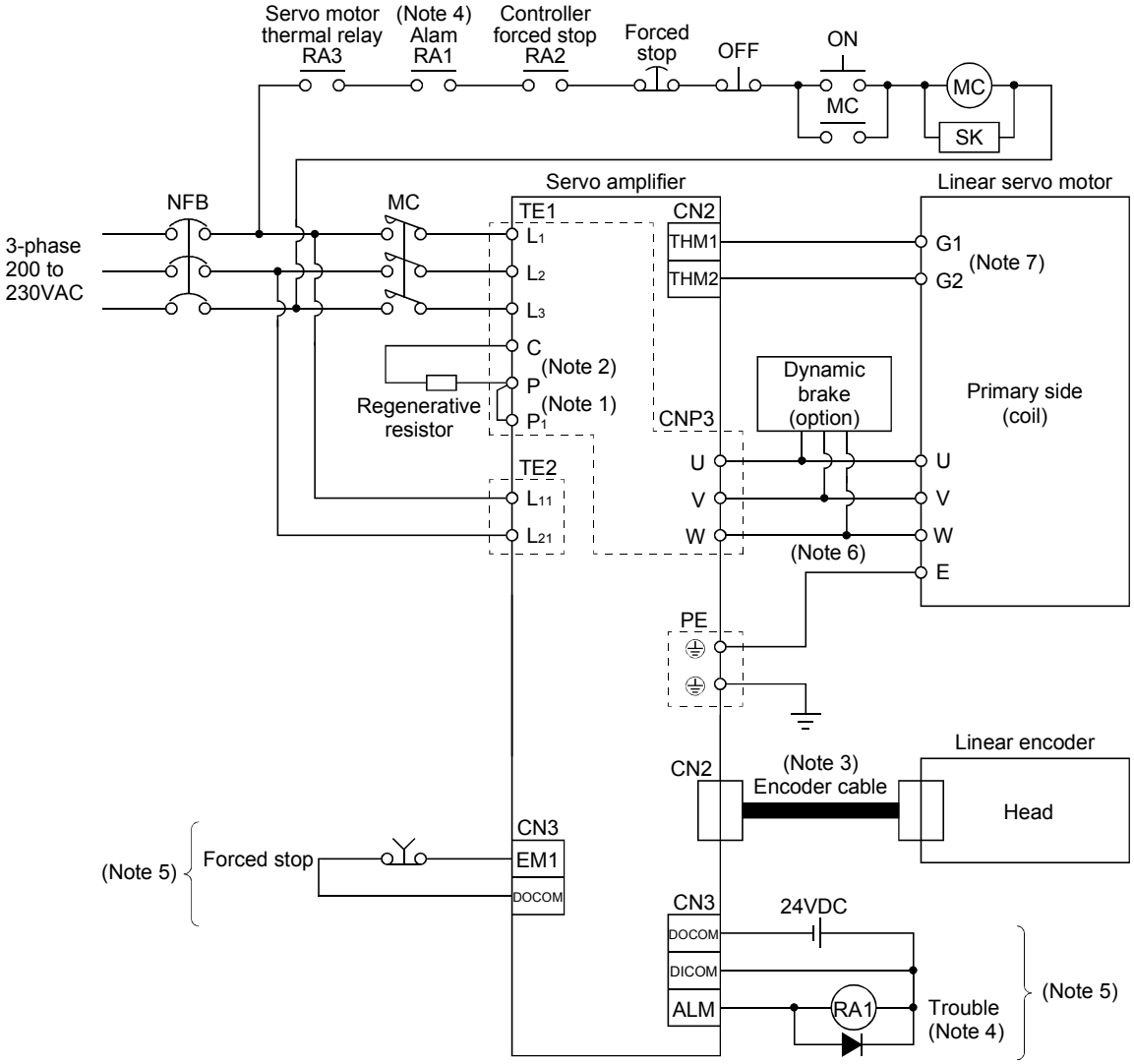

Note 1. Always connect P_1 and P. (Factory-wired.) When using the power factor improving DC reactor, refer to MR-J3-□B Servo Amplifier Instruction Manual chapter 11.

2. Always connect P and D. (Factory-wired.) When using the regenerative option, refer to MR-J3-□B Servo Amplifier Instruction Manual chapter 11.

3. For the encoder cable, refer to the section on each linear encoder in chapter 3.

4. If deactivating output of trouble (ALM) with parameter change, configure up the power supply circuit which switches off the magnetic contactor after detection of alarm occurrence on the controller side.

5. For the sink I/O interface. For the source I/O interface, refer to MR-J3-□B Servo Amplifier Instruction Manual section 3.7.3.

6. For connection of the power supply, refer to the section on each linear servo motor in chapter 2.

7. There may not be a thermistor output.

(5) MR-J3-22KB4-RJ004

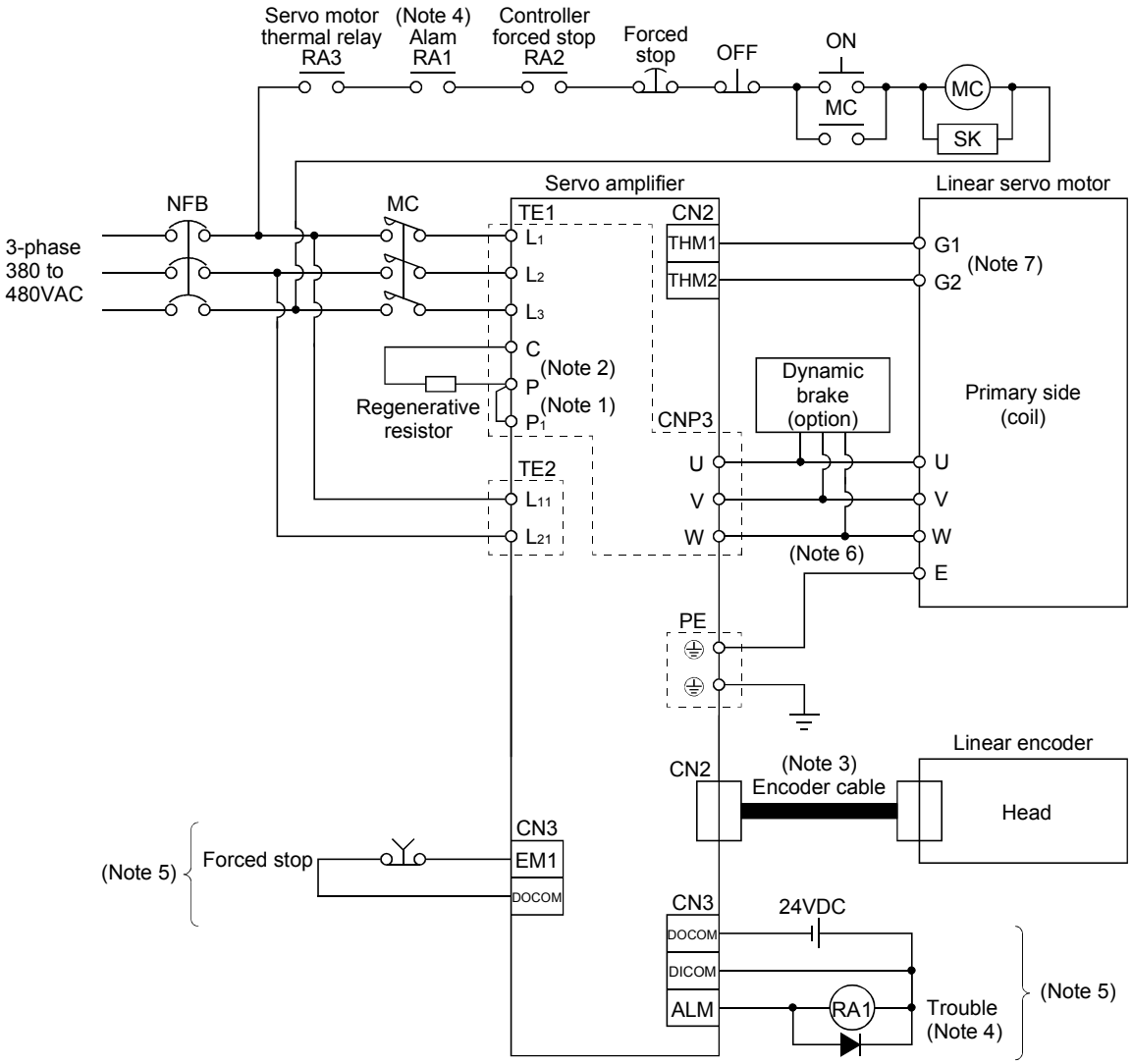

Note 1. Always connect P_1 and P. (Factory-wired.) When using the power factor improving DC reactor, refer to MR-J3-□B Servo Amplifier Instruction Manual chapter 11.

2. Always connect P and D. (Factory-wired.) When using the regenerative option, refer to MR-J3-□B Servo Amplifier Instruction Manual chapter 11.

3. For the encoder cable, refer to the section on each linear encoder in chapter 3.

4. If deactivating output of trouble (ALM) with parameter change, configure up the power supply circuit which switches off the magnetic contactor after detection of alarm occurrence on the controller side.

5. For the sink I/O interface. For the source I/O interface, refer to MR-J3-□B Servo Amplifier Instruction Manual section 3.7.3.

6. For connection of the power supply, refer to the section on each linear servo motor in chapter 2.

7. There may not be a thermistor output.

4.3 I/O signal connection example

POINT

- For details of each signal, refer to section 3.5 of the MR-J3-□B Servo Amplifier Instruction Manual.

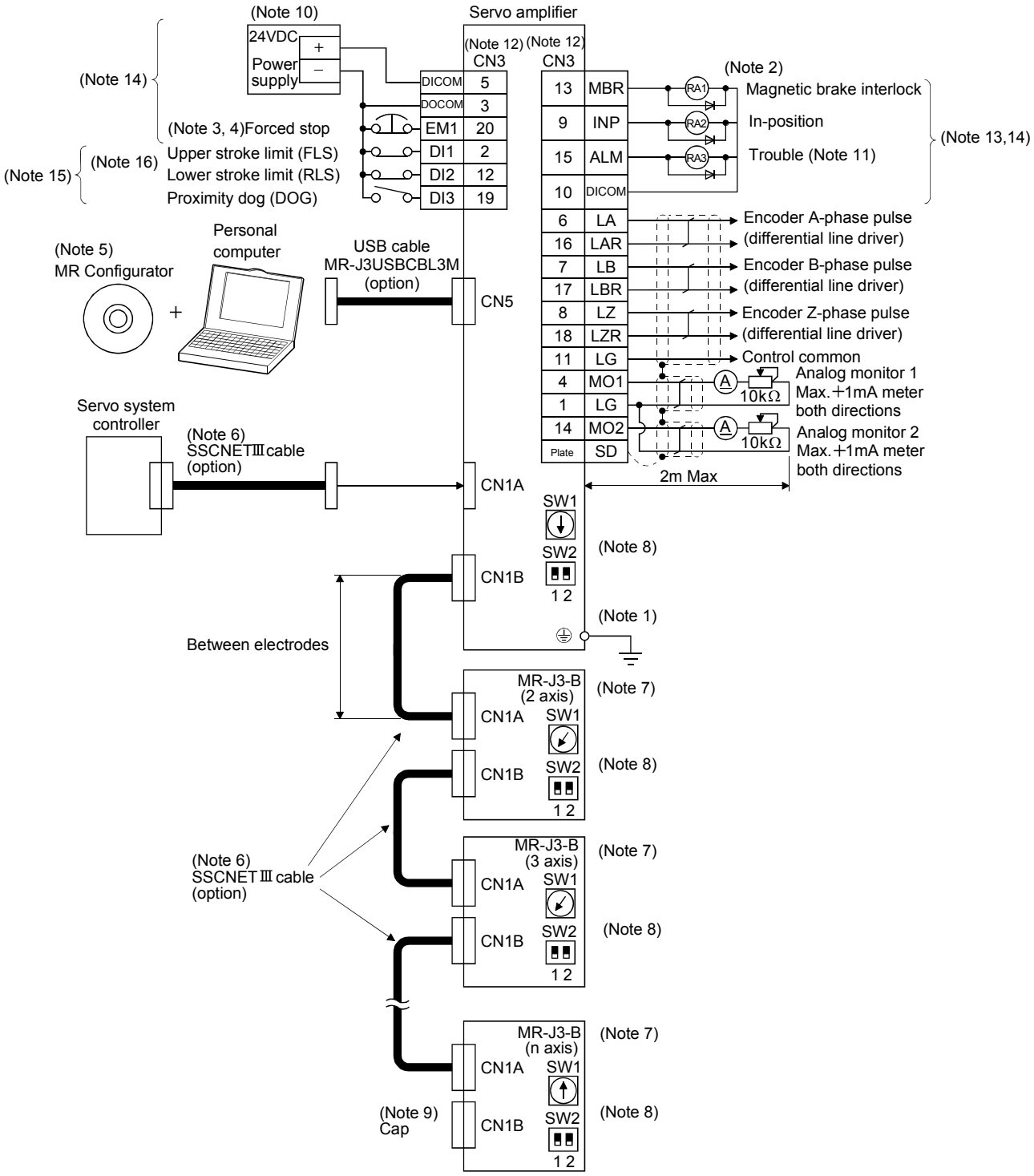

Note 1 To prevent an electric shock, always connect the protective earth (PE) terminal (terminal marked ⏚) of the servo amplifier to the protective earth (PE) of the control box.

2. Connect the diode in the correct direction. If it is connected reversely, the servo amplifier will be faulty and will not output signals, disabling the forced stop (EM1) and other protective circuits.
3. If the controller does not have an forced stop (EM1) function, always install a forced stop switch (Normally closed).
4. When starting operation, always turn on the forced stop (EM1). (Normally closed contacts) By setting "□1□□" in DRU parameter No.PA04 of the drive unit, the forced stop (EM1) can be made invalid.
5. Use MRZJW3-SETUP 221E.
6. For the distance between electrodes of SSCNETⅢ cable, refer to the following table.

Cable	Cable model name	Cable length	Distance between electrodes
Standard code inside panel	MR-J3BUS□M	0.15m to 3m	20m
Standard cable outside panel	MR-J3BUS□M-A	5m to 20m	
Long-distance cable	MR-J3BUS□M-B	30m to 50m	50m

7. The wiring of the second and subsequent axes is omitted.
8. Up to eight axes (n = 1 to 8) may be connected. Refer to MR-J3-□B Servo Amplifier Instruction Manual section 3.13 for setting of axis selection.
9. Make sure to put a cap on the unused CN1A・CN1B.
10. Supply 24VDC±10% 150mA current for interfaces from the outside. 150mA is the value applicable when all I/O signals are used. The current capacity can be decreased by reducing the number of I/O points. Refer to MR-J3-□B Servo Amplifier Instruction Manual section 3.7.2 (1) that gives the current value necessary for the interface.
11. Trouble (ALM) turns on in normal alarm-free condition. When this signal is switched off (at occurrence of an alarm), the output of the programmable controller should be stopped by the sequence program.
12. The pins with the same signal name are connected in the servo amplifier.
13. The signal can be changed by parameter No.PD07, PD08, PD09.
14. For the sink I/O interface. For the source I/O interface, refer to MR-J3-□B Servo Amplifier Instruction Manual section 3.7.3.
15. Devices can be assigned for DI1・DI2・DI3 with controller setting. For devices that can be assigned, refer to the controller instruction manual. The assigned devices are for the Q173DCPU, Q172DCPU, Q173HCPU, Q172HCPU, and QD75MH□.
16. Used for the magnetic pole detection. (Refer to section 5.2)

4.4 Connectors and signal arrangements

POINT
・The pin configurations of the connectors are as viewed from the cable connector wiring section.

Refer to Chapter 8 SERVO AMPLIFIER OUTLINE DRAWINGS for the appearances and connector layouts of the servo amplifiers.

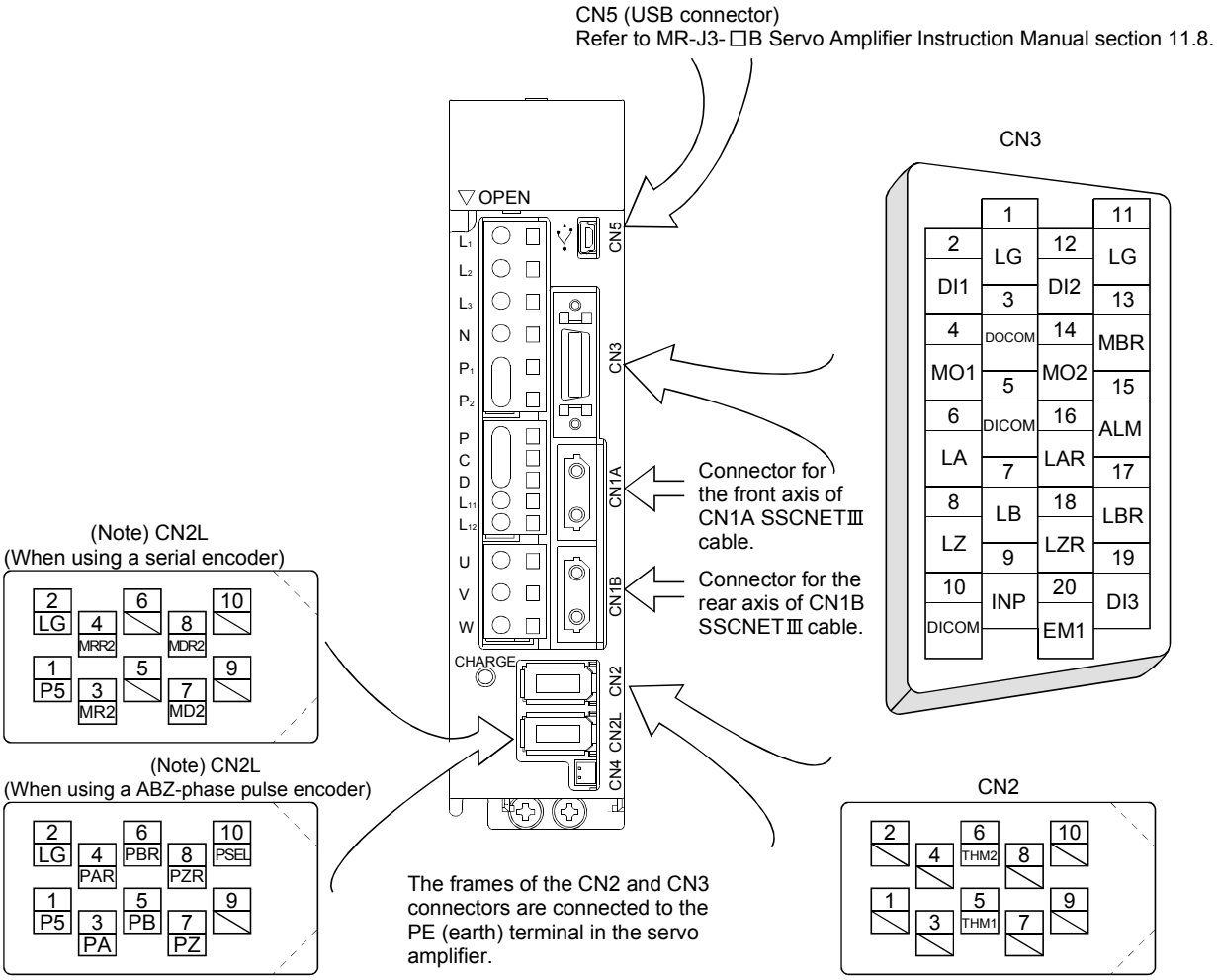

Note. The 3M make connector is shown.
When using any other connector, refer to MR-J3-□B Servo Amplifier Instruction Manual section 11.1.2.

4.5 Internal connection diagram

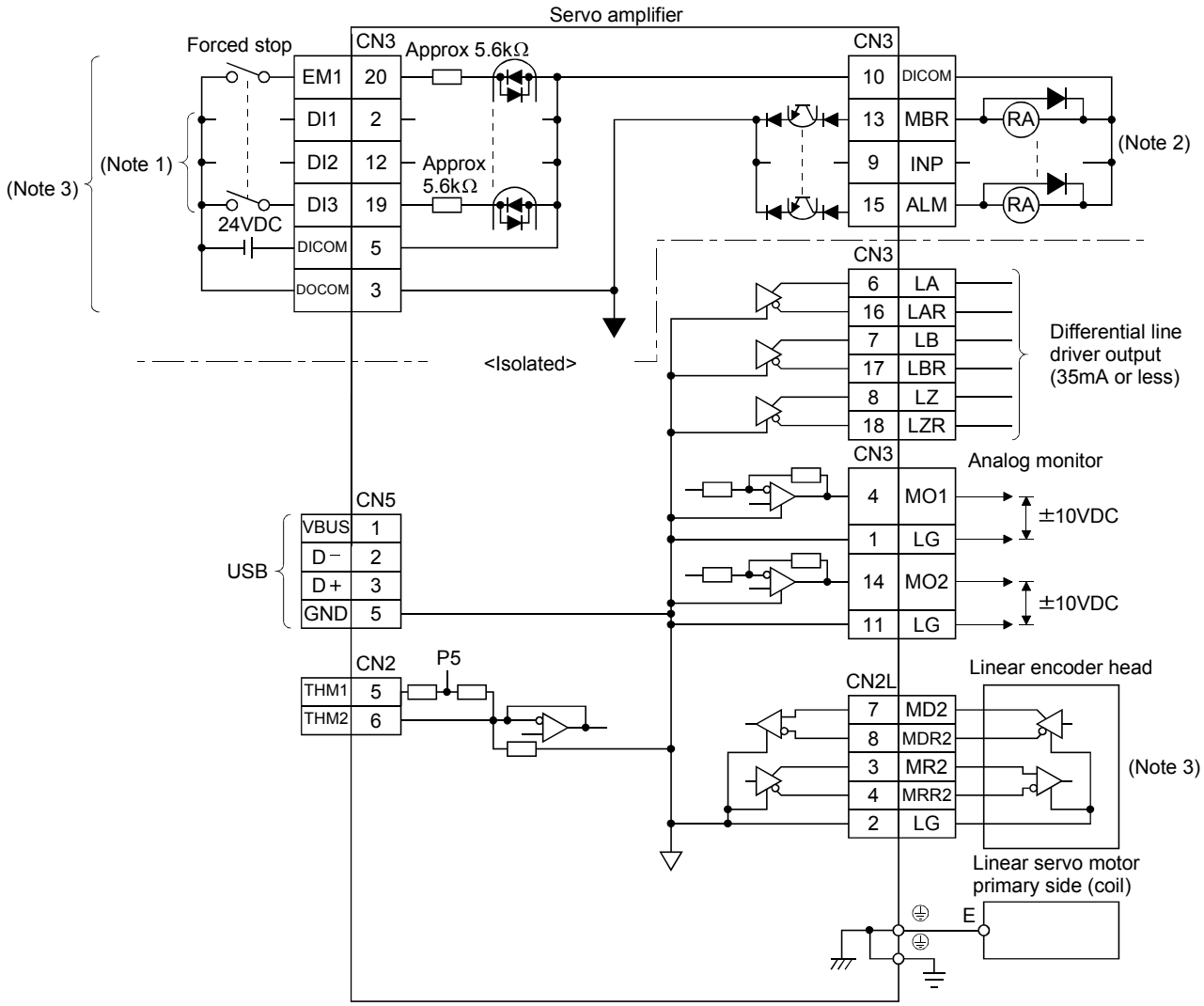

Note 1. Signal can be assigned for these pins with host controller setting.
For contents of signals, refer to the instruction manual of host controller.

2. For the sink I/O interface. For the source I/O interface, refer to MR-J3-□B Servo Amplifier Instruction Manual section 3.7.3.

3. The following shows the case of the linear encoder for the ABZ-phase output pulse train specification.

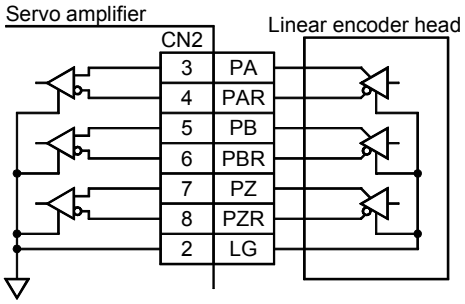

MEMO

5. OPERATION AND FUNCTIONS

5.1 Startup

5.1.1 Startup procedure

Start up the linear servo referring to the following procedure.

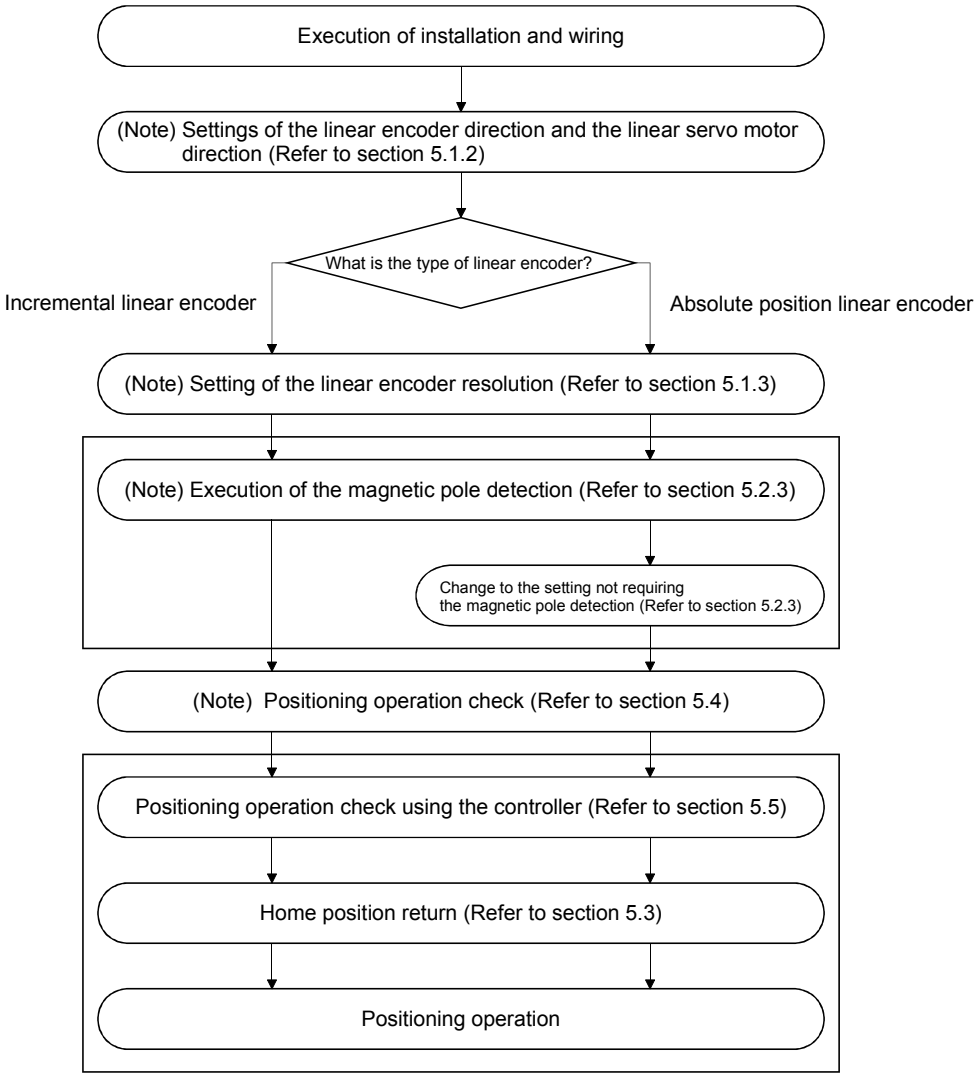

Note. MR Configurator is used.

5.1.2 Settings of the linear encoder direction and the linear servo motor direction

Set the positive direction of linear servo motor to match with the increase direction of linear encoder feedback using the first digit (Encoder pulse count polarity selection) of the parameter No.PC27.

Parameter No.PC27

Encoder pulse count polarity selection
0: Linear servo motor positive direction and linear encoder increase direction
1: Linear servo motor positive direction and linear encoder decrease direction

(1) Parameter setting method

(a) Confirm the positive direction of linear servo motor the relationship of the moving direction of linear servo motor to commands is determined by the setting of the parameter No.PA14 as follows.

Parameter No.PA14 setting value	Moving direction of linear servo motor	
	Address increase command	Address decrease command
0	Positive direction	Negative direction
1	Negative direction	Positive direction

The positive/negative directions of the linear servo motor are as shown below.

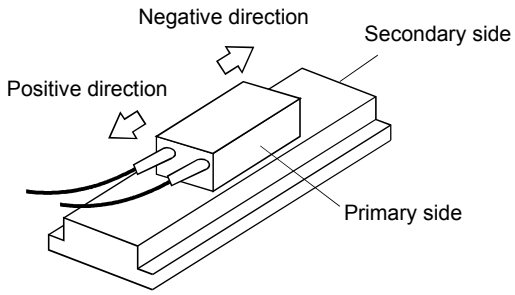

LM-H2 and LM-F series

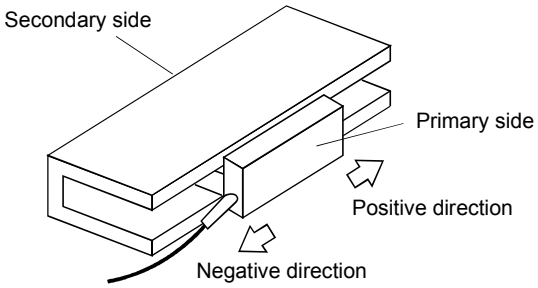

LM-U2 series

(b) Confirm the increase direction of linear encoder.

(c) If the positive direction of the linear servo motor matches with the increase direction of linear encoder, set the parameter No.PC27 to "□□□0". If not, set the parameter to "□□□1".

(2) Confirmation method

Confirm the positive direction of linear servo motor and the increase direction of linear encoder using the following procedure.

(a) Move the linear servo motor manually to the positive direction in the servo off status.

(b) Confirm the motor speed (positive and negative) at that time using MR Configurator.

(c) If the parameter No.PC27 is set to "□□□0" and the positive direction of linear servo motor matches with the increase direction of linear encoder, the motor speed will be a positive value by making the linear servo motor work to the positive direction. If the positive direction of linear servo motor does not match with the increase direction of linear encoder, the motor speed will be a negative value. If the parameter No.PC27 is set to "□□□1" and the positive direction of linear servo motor matches with the increase direction of linear encoder, the motor speed will be a negative value by making the linear servo motor work to the positive direction.

5.1.3 Setting of the linear encoder resolution

Set the ratio to the linear encoder resolution using the parameter No.PS02 (Linear encoder resolution setting numerator) and parameter No.PS03 (Linear encoder resolution setting denominator).

> **POINT**
> - When using this parameter, turn the power off once after setting the parameter No.PA19 to "□□□D", and then turn it on again.
> - After setting this parameter, turning the power off once and then turning it on again makes the setting valid.

(1) Parameter setting

Set the value as the following equation.

$$\frac{\text{Parameter No.PS02 (Linear encoder resolution setting numerator)}}{\text{Parameter No.PS03 (Linear encoder resolution setting denominator)}} = \text{Linear encoder resolution [}\mu\text{ m]}$$

(2) Parameter setting example

When the linear encoder resolution is 0.5 μm

$$\frac{\text{Parameter No.PS02}}{\text{Parameter No.PS03}} = \text{Linear encoder resolution} = 0.5\ \mu\text{m} = \frac{1}{2}$$

The following shows the simplified chart for the setting value of parameter Nos.PS02 and PS03.

		Linear encoder resolution (μm)							
		0.01	0.02	0.05	0.1	0.2	0.5	1.0	2.0
Setting value	Parameter No.PS02	1	1	1	1	1	1	1	2
	Parameter No PS03	100	50	20	10	5	2	1	1

> **POINT**
> - When setting the wrong value to the parameter Nos. PS02 and PS03, they may not operate properly.
> - Servo alarm (27 and 42) may occur at positioning operation or magnetic pole detection.

5.2 Settings of the magnetic pole detection and the magnetic pole detection voltage level

Make sure to perform the magnetic pole detection before starting the positioning operation in order to match the positional relationship between the linear servo motor and the linear encoder.

5.2.1 Preparation for the magnetic pole detection

For the magnetic pole detection, the test operation mode (positioning operation) of MR Configurator is used. Turn the power of servo amplifier off and set the test operation select switch (SW2-1) as shown below. By turning the power on, it switches to the test operation mode.

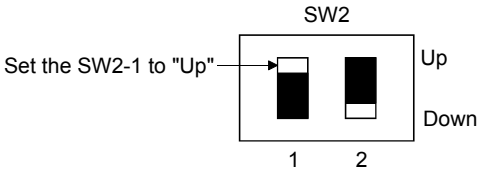

5.2.2 Magnetic pole detection

⚠ WARNING	・Note that the magnetic pole detection is automatically started simultaneously with turning ON the servo-on command.

⚠ CAUTION	・If the magnetic pole detection is not executed properly, the linear servo motor may run unexpectedly.

POINT

- Establish the machine configuration using the stroke limits (FLS and RLS). If the stroke limits (FLS and RLS) do not exist, it may cause the machine damage by a collision.
- At the magnetic pole detection, it is not predictable whether it moves to the positive direction or the positive direction.
- Setting the parameter No.PS09 (Magnetic pole detection voltage level) may cause the occurrence of overload, overcurrent, magnetic pole detection alarm, etc.
- When performing the positioning operation from the positioning controller, set the sequence which confirms the normal completion of magnetic pole detection and the servo-on status, then outputs the positioning command. If outputting the positioning command before the Ready (RD) turns ON, the command may not be accepted or the servo alarm may occur.
- After the magnetic pole detection, check the accuracy of position with the test operation (positioning operation) of MR Configurator.
- If a gap is generated to the positional relationship between the linear encoder and the linear servo motor when using the absolute position linear encoder, carry out the magnetic pole detection again.
- The accuracy of magnetic pole detection will be improved by being operated in the no-load condition.
- The servo alarm may occur when the linear encoder is not mounted properly or when the setting (parameter Nos. PS02 and PS03) of linear encoder resolution or the setting value of parameter No.PS09 (magnetic detection voltage level) is not correct.
- On the machine of which friction becomes 30% or more than the rated thrust, it may not operate properly after the magnetic pole detection.
- On the machine of which imbalance thrust becomes 20% or more than the rated thrust at the horizontal axis, it may not operate properly after the magnetic pole detection.

For the following cases, the magnetic pole detection is required.

(a) When using the incremental linear encoder (Refer to (1) in this section)

(b) When using the absolute position linear encoder and matching with the cases indicated below (Refer to (2) in this section)
- At the system setup (at the first startup of equipment)
- When the servo amplifier is replaced
- When the linear servo motor (primary side (coil) or secondary side (magnet)) is replaced
- When the linear encoder (scale or head) is replaced or its installation is changed

(1) For the incremental linear encoder

For the incremental linear encoder, the magnetic pole detection is required every time the power is turned on. By turning ON the servo-on command from the controller after the power-on, the magnetic pole detection is automatically carried out. Therefore, there is no need to set the parameters for executing the magnetic pole detection.

(a) Timing chart

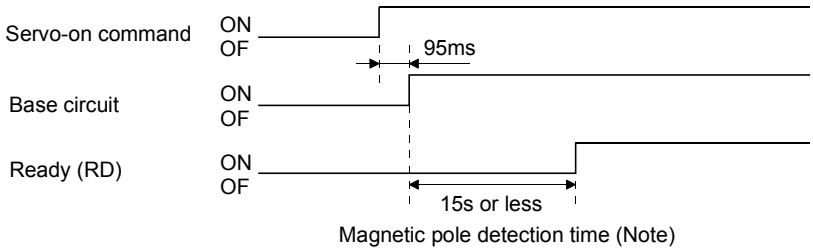

Note. The magnetic pole detection time indicates the operation time when the stroke limits (FLS and RLS) is ON.

(b) Linear servo motor operation (when FLS and RLS are ON)

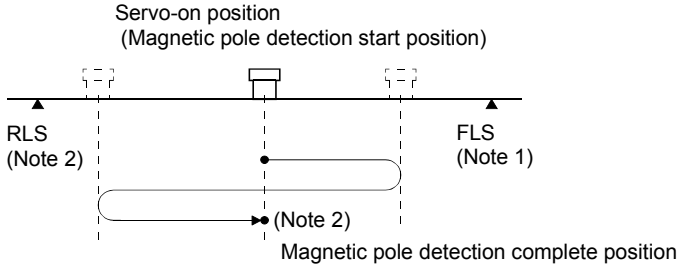

Note 1. When the stroke limit (FLS or RLS) turns OFF during the magnetic pole detection, the operation of magnetic pole detection is carried on to the opposite direction. When both FLS and RLS are OFF, the magnetic pole detection error (27) occurs.

2. The following shows the pitch against magnetic pole.

Linear servo motor series	LM-H2 LM-F	LM-U2	
		Medium thrust	Large thrust
Pitch against magnetic pole [mm]	48	30	60

(c) Linear servo motor operation (when FLS or RLS is OFF)

When the FLS or RLS is OFF at the servo-on, the magnetic pole detection is carried out as follows.

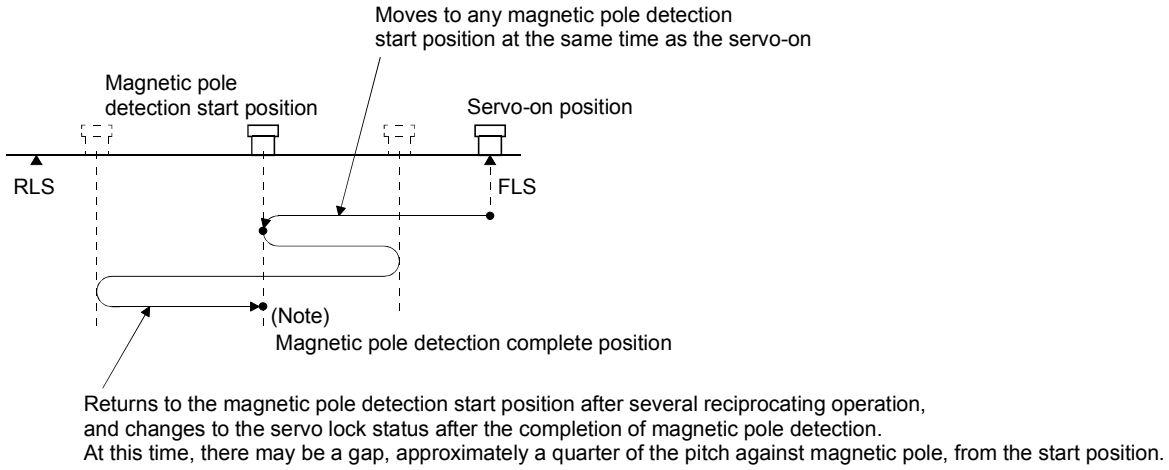

Note. For the pitch against magnetic pole, refer to (1) (b) Note 2 in this section.

(2) For the absolute position linear encoder

POINT
・If a gap is generated to the positional relationship between the linear encoder and the linear servo motor when using the absolute position linear encoder, carry out the magnetic pole detection again.

Carry out the magnetic pole detection referring the following procedure.

(a) Set the parameter No.PS01 (Linear function selection 1) to "□□□1 (Magnetic pole detection always valid)".

Parameter No.PS01

			1

Magnetic pole detection always valid (initial value)

(b) Execute the magnetic pole detection. (Refer to (1) (a) and (b) in this section)

(c) Change the parameter No.PS01 to "□□□0 (Magnetic pole detection not valid)" after the normal completion of magnetic pole detection.

Parameter No.PS01

			0

Magnetic pole detection invalid

By making the magnetic pole detection function invalid with the parameter No.PS01 after the magnetic pole detection, the magnetic pole detection for each power-on will be unnecessary.

5.2.3 Setting of the magnetic pole detection voltage level

Set the magnetic pole detection voltage level with the parameter No.PS09 (magnetic pole detection voltage level).

(1) Guideline of parameter settings

Set the parameters referring to the following table.

Parameter No.PS09 setting value (Guide value) (Servo status)	Small ← Medium → Large (Less than 10 (Initial value) More than 50)	
Thrust at operation	Small	Large
Overload, overcurrent alarm	Not frequently occurred	Frequently occurred
Magnetic pole detection alarm	Frequently occurred	Not frequently occurred
Magnetic pole detection accuracy	Low	High

(2) Setting procedure

(a) By carrying out the magnetic pole operation, make the setting of parameter No.PS09 (magnetic pole detection voltage level) larger until the overload 1 (50), overload 2 (51), overvoltage (33), overload warning 1 (E1) and overload warning 2 (EC) occur. To get a rough idea, make it lager in "5". When these alarms and warnings occur during the magnetic pole detection by MR Configurator, the test operation of MR Configurator is automatically completed.

(b) Set the final setting value to approximately 70% of the value which is set at the occurrence of the overload 1 (50), overload 2 (51), overvoltage (33), overload warning 1 (E1) and overload warning 2 (EC). However, in the case where the initial magnetic pole detection error (27) occurs with this setting value, set the final setting value to the value intermediate between the setting value at the occurrence of the overload 1 (50), overload 2 (51), overvoltage (33), overload warning 1 (E1), overload warning 2 (EC) and the setting value at the occurrence of the magnetic pole detection alarm.

(c) Carry out the magnetic pole detection again with the final setting value.

(3) Setting example

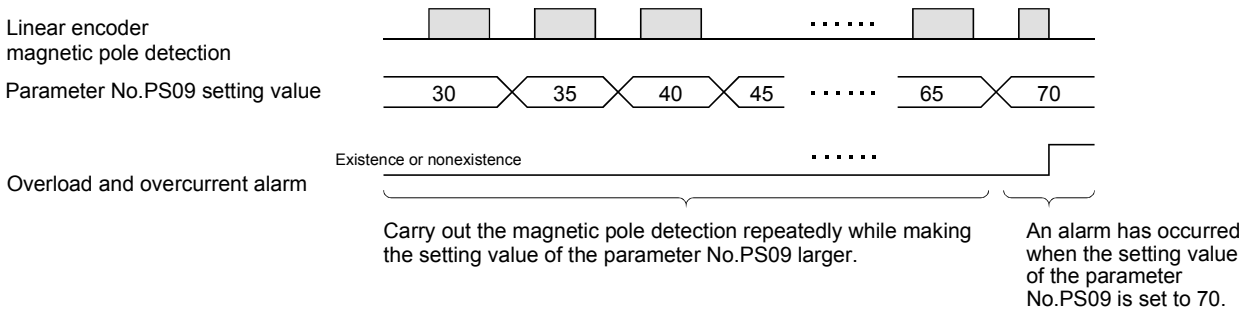

Here, the final setting value of the parameter No.PS09 is set to 49 (the setting value at the occurrence of the overload and overcurrent alarm = 70 × 0.7).

5.2.4 Magnetic pole detection method using MR Configurator

The following shows the procedure of the magnetic pole detection using MR Configurator.

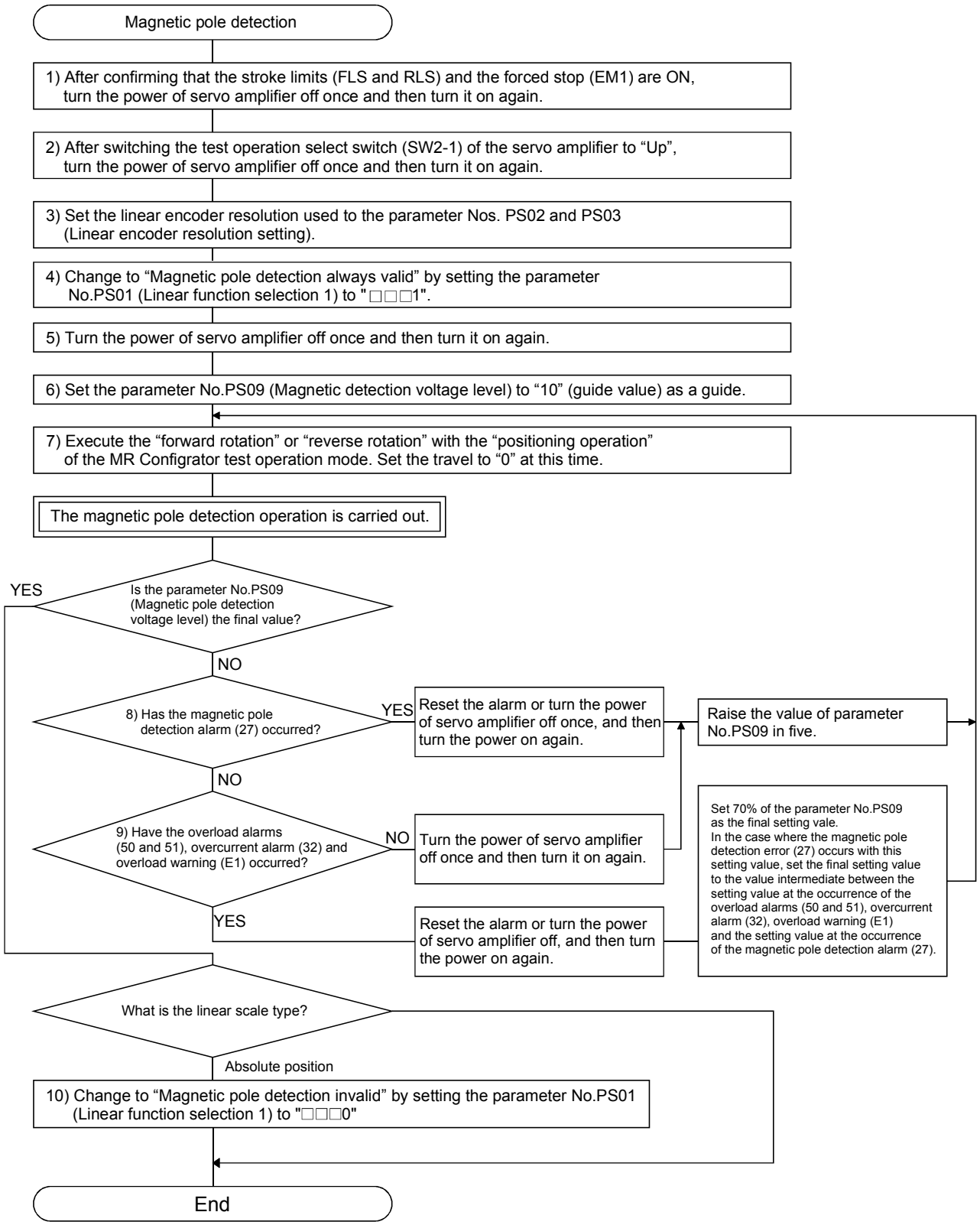

5.2.5 Magnetic pole detection at the replacement of servo amplifier

When replacing the servo amplifier, carry out the magnetic pole detection again. If the magnetic pole detection cannot be performed unavoidably, write the magnetic pole information from the servo amplifier before the replacement to the one after the replacement using MR Configurator.

(1) Procedures

(a) Read the magnetic pole information of the servo amplifier before the replacement.

(b) Write the read magnetic pole information to the servo amplifier after the replacement.

(c) Perform the test operation with the torque limit for ensuring the safety, and confirm that there is no trouble.

(2) Transplant method of the magnetic pole information

(a) How to read the magnetic pole information from the servo amplifier before the replacement

1) Select "MR-J3-B Linear" from the system setting of MR Configurator.

2) Confirm that the personal computer is connected to the servo amplifier, and select "Diagnostic" and then "Linear diagnostic".

3) Click the "Magnetic pole information" button (1) in Figure) to open the magnetic pole information window.

4) Click "Read All" of the magnetic pole information window. (2) in Figure)

5) Confirm the data 1 and data 2 (3) in Figure) of the magnetic pole information window and take notes.

(b) How to write the magnetic pole information to the servo amplifier after the replacement

1) Select "MR-J3-B Linear" from the system setting of MR Configurator.

2) Confirm that the personal computer is connected to the servo amplifier, and select "Diagnostic" and then "Linear diagnostic".

3) Click the "Magnetic pole information" button (1) in Figure) to open the magnetic pole information window.

4) Input the value of the magnetic pole information taken notes to the data 1 and data 2 (3) in Figure) of the magnetic pole information window.

5) Click "Write All" (4) in Figure) of the magnetic pole information window.

6) Turn the power of servo amplifier off once, and then turn it on again.

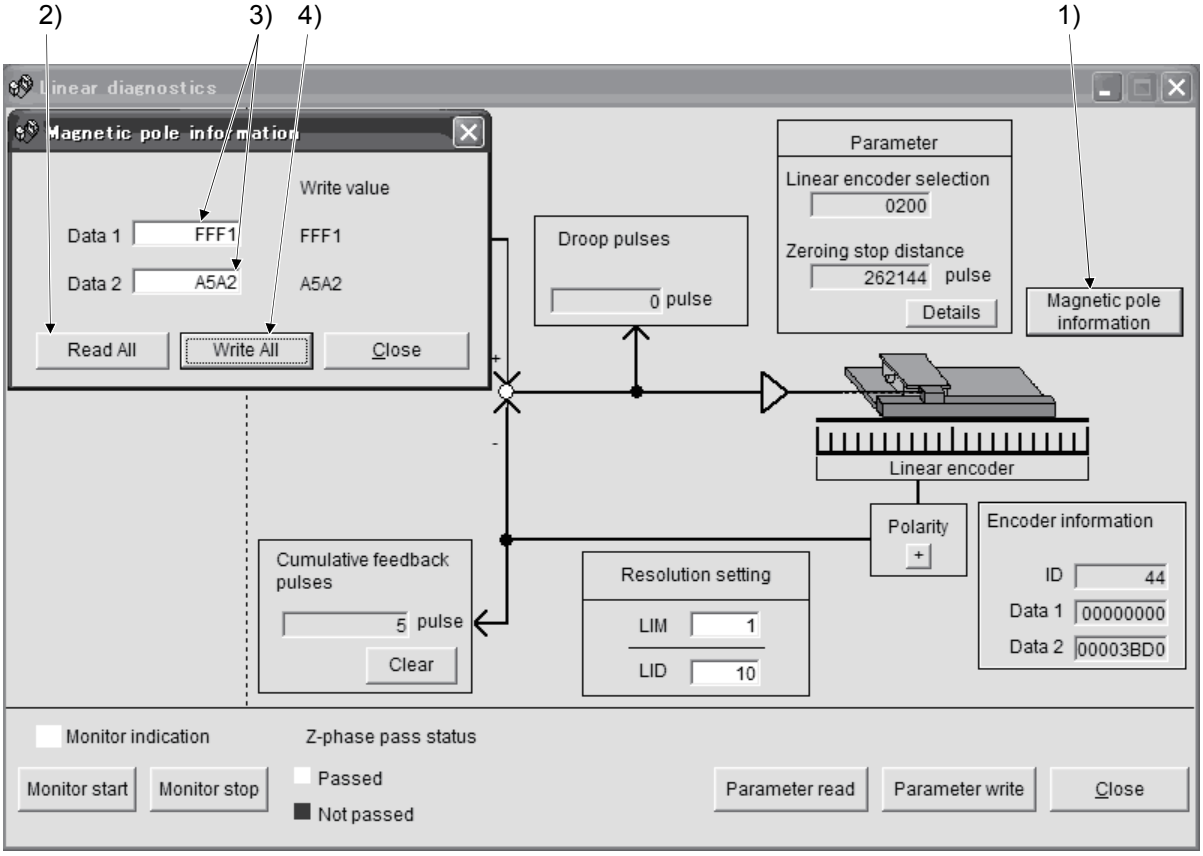
2)
3)
4)
1)
Linear diagnostics
Magnetic pole information
Write value
Data 1
FFF1
FFF1
Data 2
A5A2
A5A2
Read All
Write All
Close
Droop pulses
0 pulse
Parameter
Linear encoder selection
0200
Zeroing stop distance
262144 pulse
Details
Magnetic pole information
Linear encoder
Polarity
+
Encoder information
ID
44
Data 1
00000000
Data 2
00003BD0
Cumulative feedback pulses
5 pulse
Clear
Resolution setting
LIM
1
LID
10
Monitor indication
Z-phase pass status
Passed
Not passed
Monitor start
Monitor stop
Parameter read
Parameter write
Close

5.2.6 Magnetic pole detection under the specified condition

(1) Magnetic pole detection by the current detection 1

This method is used when the travel at the magnetic pole detection is expected to be smaller than the magnetic pole detection (initial value) of the positioning detection method. The use of this method is limited to when the load mass ratio (control gain) of equipment is clearly known.

(a) Procedures of magnetic pole detection by the current detection 1

1) If the control gains (Parameter Nos. PB06, PB07, PB08, PB09 and PB10) are known, set them in advance. If they are not known, adjust the control gains using the following method a. or b.

a. Move the linear servo motor and execute the auto tuning (or normal gain adjustment), after the magnetic pole detection of the positioning detection method.

b. Set the auto tuning to the manual mode 2 (Parameter No.PA08: □□□2), set the response level to 12 (Parameter No.PA09: Initial value), and then apply the value calculated from the machine configuration to the load mass ratio (Parameter No.PB06) against the linear servo motor primary side.

2) If the initial magnetic pole detection error (27) occurs at the magnetic pole detection, the following conditions may be considered as causes. Check the setting values.
- The setting value of the parameter No.PS09 (Magnetic pole detection voltage level) is too small.
- The parameter No.PC27 (Encoder pulse count polarity) is not set correctly.
- The parameter Nos. PS02 and PS03 (Linear encoder resolution setting) are not set correctly.

3) If the overcurrent alarm occurs during the magnetic pole detection, make the magnetic pole detection voltage level (Parameter No.PS09) smaller five by five. If the overload 1 (59) and overload 2 (51) occur, make the current detection method oscillation setting (Parameter No.PS11) smaller 10 by 10.

4) If the machine resonates during the magnetic pole detection, lower the response level (Parameter No.PA09) of the auto tuning or use the machine resonance filter (Parameter Nos. PB13 and PB15).

(b) Magnetic pole detection flow

The magnetic pole detection by the current detection 1 is shown using the flow chart below.

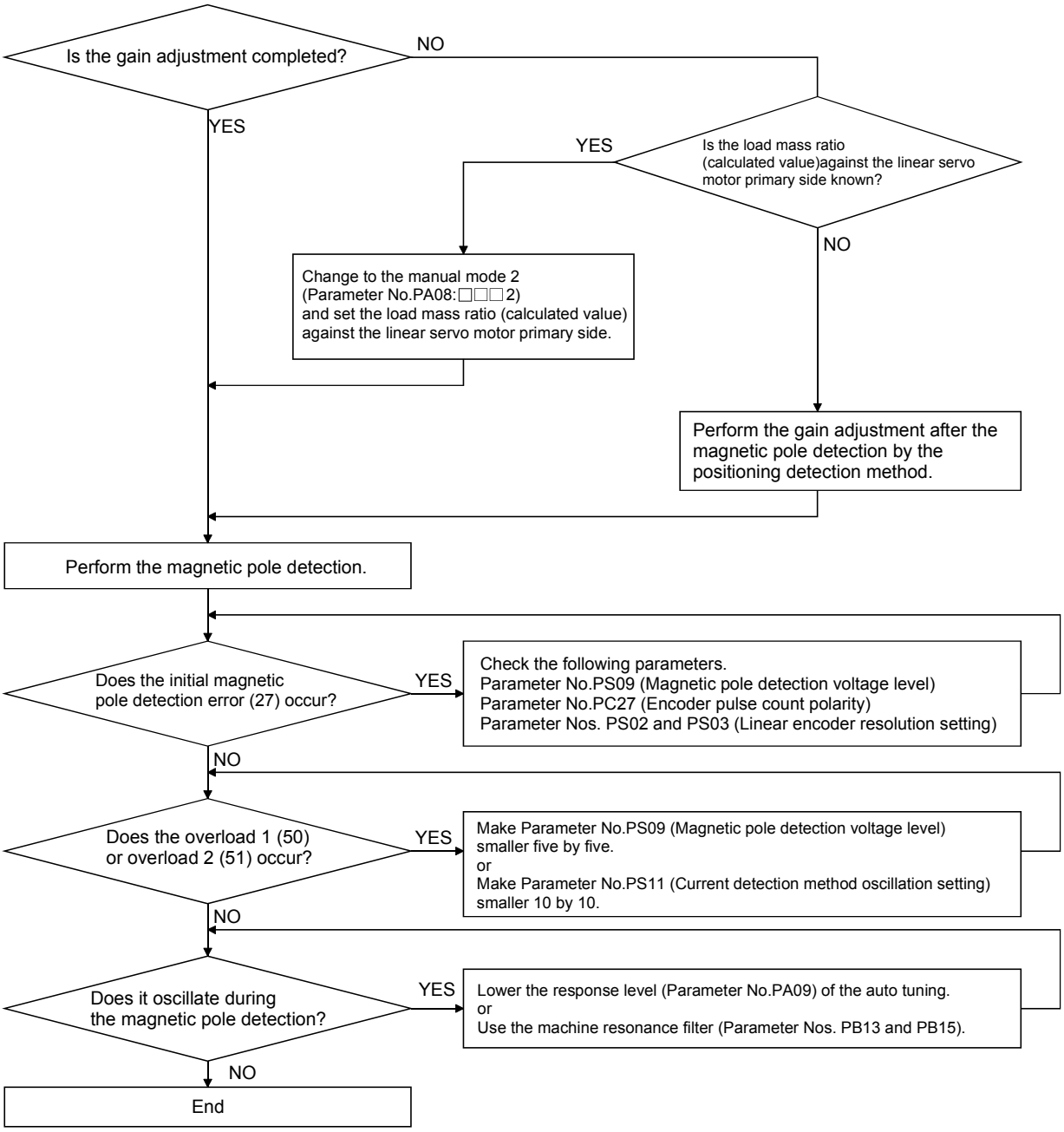

(2) Magnetic pole detection by the current detection 2

For the positioning detection method 1 and current detection method 1, this method is used in the machine configuration with little friction such as an air guide when the magnetic pole detection cannot be completed normally. The setting method is the same as that of the current detection method 1, but there is a possibility that it moves a half distance of the maximum magnetic pole pitch at the magnetic pole detection.

5.3 Home position return

> POINT
> - The incremental linear encoder and the absolute position linear encoder have different home position reference positions at the home position return.

5.3.1 Incremental linear encoder

> ⚠ CAUTION
> - If the resolution or stop interval (the third digit of the parameter No.PS01) of the linear encoder is too large, it is very dangerous since it may crash into the stroke end.

> POINT
> - When the servo system controller is a positioning module (QD75MH), the operation will be different. Refer to (3) in this section.

(1) When the linear encoder home position (reference mark) exists in the home position return direction

The home position on the incremental linear encoder is a position per 1048576 pulses (changeable with the third digit of the parameter No.PS01), which is based on the linear encoder home position (reference mark) passed primarily after the start of home position return. Change the setting value of the parameter No.PS01 according to the linear encoder resolution.

Parameter No.PS01

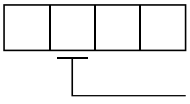

Stop interval setting
at the home position return

Setting value	Travel [pulse]
0	8192
1	131072
2	262144
3	1048576
4	4194304
5	16777216
6	67108864

For the proximity dog type home position return, the nearest home position reference position after turning the proximity dog signal off will be the home position.

The linear encoder home position must be set to only one during the whole stroke and to the position to be surely passed after the start of home position return. The encoder Z-phase pulse (LZ) cannot be used.

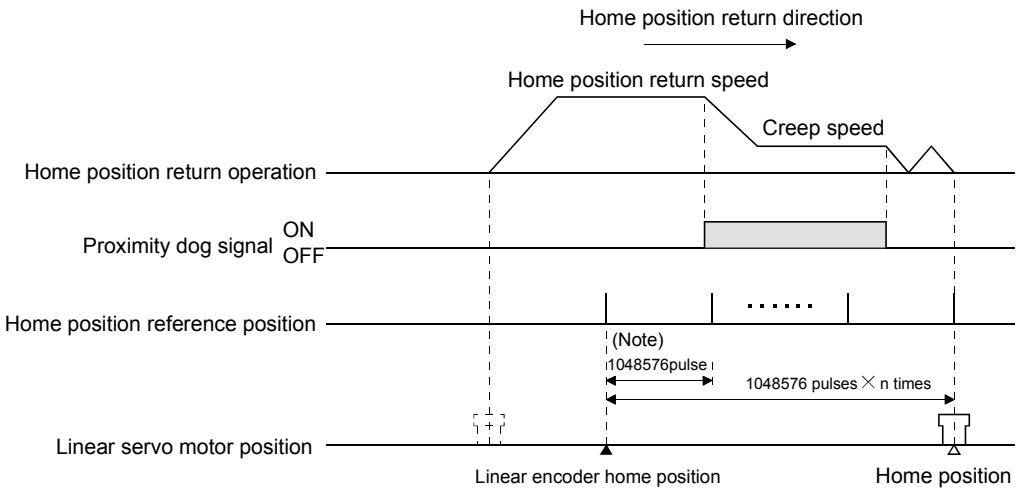

Note. Can be changed with the parameter No.PS01.

(2) When the linear encoder home position does not exist in the home position return direction

If the home position return is performed from the position where the linear encoder does not exist in the home position return direction, the controller will be a home position return error. Error contents differ depending on types of controller. In this chase, move it once with the JOG operation from the controller, etc. to the stroke end on the opposite side of the home position return direction, and then perform the home position return.

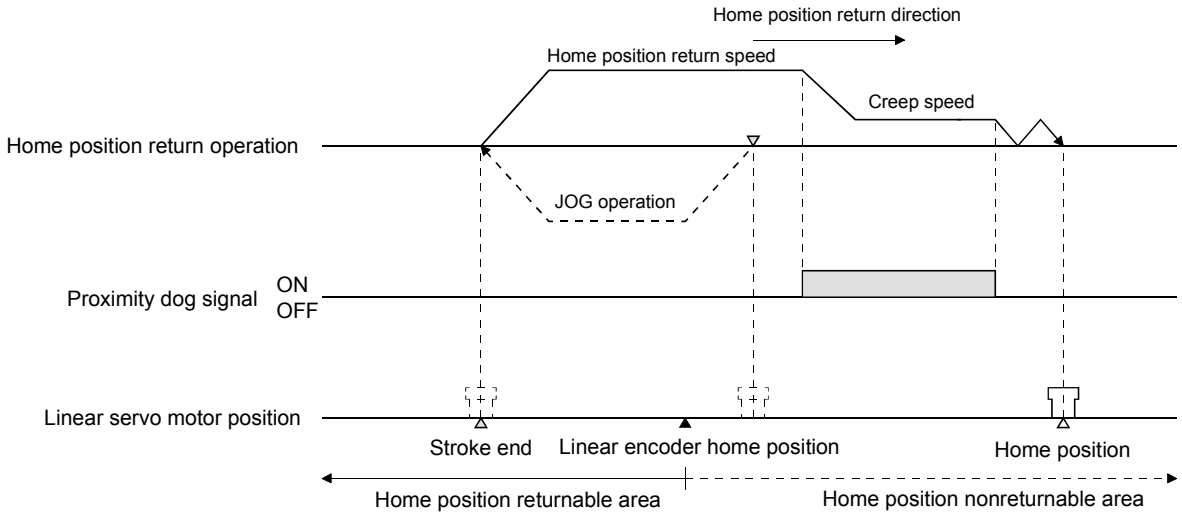

POINT

- For surely carrying out the home position return, make sure to execute the home position return after moving it to the stroke end on the opposite side with the JOG operation from the controller, etc.
- Change the setting value for the third digit of parameter No.PS01 according to the linear encoder resolution.

5.3.2 Absolute position linear encoder

The home position reference position on the absolute position linear encoder is a position per 1048576 pulses (changeable with the third digit of the parameter No.PS01), which is based on the linear encoder home position (absolute position data = 0).
For the proximity dog type home position return, the nearest home position reference position after turning the proximity dog signal off will be the home position. There is no restriction on the setting position for the home position of linear encoder. The encoder Z-phase pulse (LZ) cannot be used.

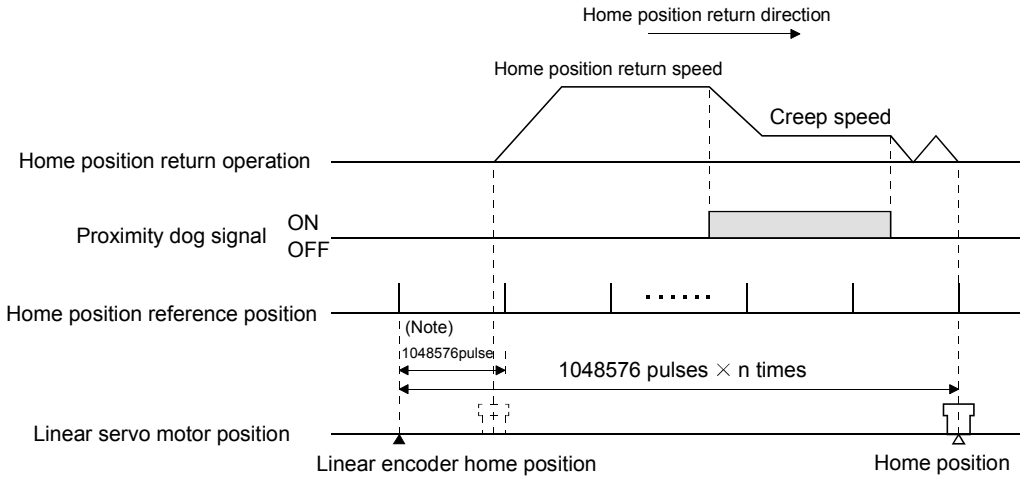

Note. Can be changed with the parameter No.PS01.

POINT
・The data set type home position return can be also carried out.

5.4 Test operation mode in MR Configurator

⚠ CAUTION	・The test operation mode is designed for servo operation confirmation and not for machine operation confirmation. Do not use this mode with the machine. Always use the linear servo motor alone. ・If an operation fault occurred, use the forced stop (EM1) to make a stop.

POINT

・The content described in this section indicates the environment that servo amplifier and personal computer are directly connected.

By using a personal computer and the MR Configurator, you can execute, positioning operation, DO forced output program operation without connecting the servo system controller.

(1) Test operation mode

(a) Positioning operation

Positioning operation can be performed without using the servo system controller. Use this operation with the forced stop reset. This operation may be used independently of whether the servo is on or off and whether the servo system controller is connected or not.

Exercise control on the positioning operation screen of the MR Configurator.

1) Operation pattern

Item	Initial value	Setting range
Travel [pulse]	4000	0 to 99999999
Speed [r/min]	200	0 to max. speed
Acceleration/deceleration time constant [ms]	1000	0 to 50000

2) Operation method

Operation	Screen control
Forward rotation start	Click the "Forward" button.
Reverse rotation start	Click the "Reverse" button.
Pause	Click the "Pause" button.

(b) Output signal (DO) forced output

Output signals can be switched on/off forcibly independently of the servo status. Use this function for output signal wiring check, etc.

Exercise control on the DO forced output screen of the MR Configurator.

(c) Program operation

Positioning operation can be performed in two or more operation patterns combined, without using the servo system controller. Use this operation with the forced stop reset. This operation may be used independently of whether the servo is on or off and whether the servo system controller is connected or not.

Exercise control on the programmed operation screen of the MR Configurator. For full information, refer to the MR Configurator Installation Guide.

Operation	Screen control
Start	Click the "Start" button.
Stop	Click the "Reset" button.

(2) Operation procedure

(a) Jog operation, positioning operation, program operation, DO forced output.

1) Switch power off.

2) Set SW2-1 to "UP".

When SW1 and SW2-1 is set to the axis number and operation is performed by the servo system controller, the test operation mode screen is displayed on the personal computer, but no function is performed.

3) Switch servo amplifier power on.

When initialization is over, the display shows the following screen.

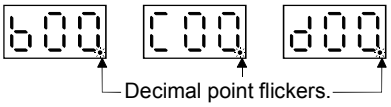

4) Perform operation with the personal computer.

5.5 Operation from the controller

When establishing the absolute position detection system, the absolute position linear encoder is required. There is no need to mount a battery (MR-J3BAT) on the servo amplifier.
The linear servo motor can be used in combination with the following controllers.

Servo system controller	Model	Remarks
Motion controller	Q17□DCPU/Q17□HCPU	Speed control (II) instructions (VVF and VVR) cannot be used.
Positioning module	QD75MH□	

5.5.1 Operation method

The positioning operation from the controller is basically the same as that of MR-J3-□B.
For the system using the incremental linear encoder, however, the magnetic pole detection is automatically performed at the first servo-on after turning the power on. For this reason, when performing the positioning operation, configure the sequence which surely confirms the servo-on status as the inter lock condition of the positioning command.
Also, some parameter settings and home position return operation varies depending on types of controllers.

5.5.2 Servo system controller setting

(1) Setting instructions

When using the linear servo, set it as described in this section. For other servo parameters and control parameters, set them in the same method as that of MR-J3-□B servo amplifier.

The following servo parameters will be valid by turning the power of servo amplifier off once and then turning it on again after writing to the servo amplifier from the controller.

Setting item					Setting description	
					Motion controller Q17□DCPU/ Q17□HCPU	(Note 3) Positioning module QD75MH□
Command resolution					Linear encoder resolution unit	
Servo parameters	Amplifier setting				MR-J3-B Linear	MR-J3-B
	Motor setting				Automatic setting	
	No.	(Note 1) Symbol	Name	Initial value	Set as necessary.	Set with sequence program. It is necessary to set the initial values of these parameters at the startup of linear servo motor. Refer to (3) in this section.
	PA01		For manufacturer setting (Note 2)	0040h		
	PA19	*BLK	Parameter write inhibit	000Dh		
	PC01	*ERZ	Error excessive alarm level	100		
	PC03	*ENRS	Encoder output pulse selection	0010h		
	PC26	**COP8	Function selection C-8	0100h		
	PC27	**COP9	Function selection C-9	0000h		
	PS01	**LIT1	Linear function selection 1	0301h		
	PS02	**LIM	Linear encoder resolution setting Numerator	1000		
	PS03	**LID	Linear encoder resolution setting Denominator	1000		
	PS04	*LIT2	Linear function selection 2	0003h		
	PS05	LB1	Linear servo motor control position deviation error detection level	50		
	PS06	LB2	Linear servo motor control speed deviation error detection level	1000		
	PS07	LB3	Linear servo motor control thrust deviation error detection level	100		
	PS08	*LIT3	Linear function selection 3	0010h		
	PS09	LPWM	Magnetic pole detection voltage level	30		
	PS10	LFH	At magnetic pole detection current detection method Identification signal frequency	5		
	PS11	LIDH	At magnetic pole detection current detection method Identification signal amplitude	100		
	PS12		For manufacturer setting (Note 2)	500		
Parameter for positioning control	Unit setting				mm	mm
	Number of pulses (AP) Travel (AL)				Refer to (2) in this section.	

Note 1. The parameters having * before the symbol will be valid in the following conditions.

* : Turn the power of servo amplifier off once after the setting and then turn it on again, or execute the controller reset.

** : Turn the power of servo amplifier off once after the setting, and then turn it on again.

2. For the QD75 MH□, make sure to set the initial value.

3. Pay attention on the followings.

- If the parameter (servo parameter) of servo amplifier has been changed, it automatically reads the servo parameter and stores in the buffer memory of QD75MH□. However, it does not reflect to the flash ROM.
- When turning off, resetting the power of QD75MH□ or turning off the control circuit power supply of servo amplifier right after changing the servo parameter, the servo parameter may not reflect to the buffer memory of QD75MH□. In such a case, change it again.

(2) Setting for the number of pulses (AP) and travel (AL)

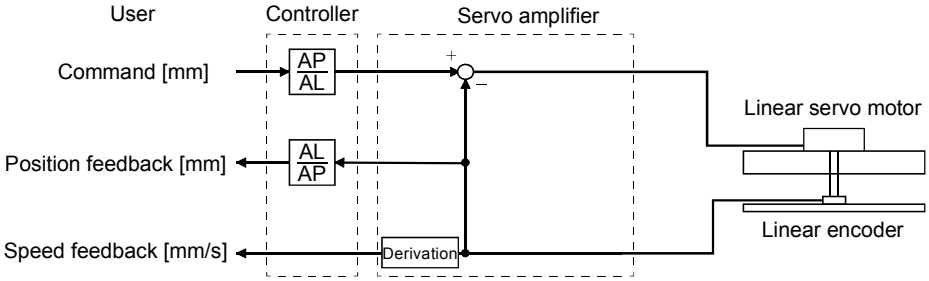

The number of pulses (AP) and travel (AL) of the linear encoder are calculated in the following condition.

When the linear encoder resolution is 0.05 μm

$$\frac{\text{Number of pulses (AP) [pulse]}}{\text{Travel (AL) [}\mu\text{m]}} = \frac{1}{0.05} = \frac{20}{1}$$

(3) Sequence program example of servo parameters on the QD75MH□

(a) Sequence program example

The following shows the example of writing the axis No.1 servo parameter to the flash ROM.

After changing the servo parameter, turn on the power of QD75MH□ again or reset the CPU, then send the setting value to the servo amplifier. Refer to (4) in this section for the special setting parameter (No.PS□) address of servo parameter.

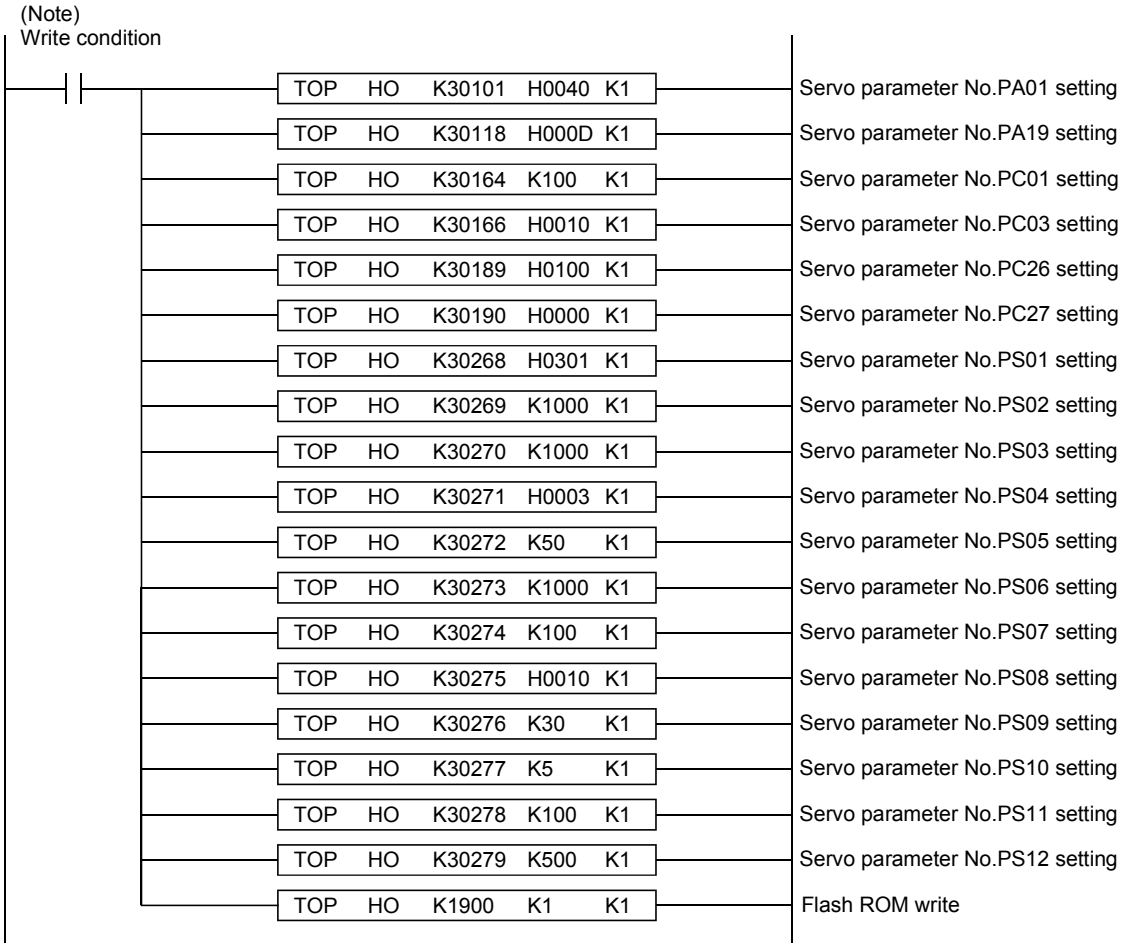

The number of write time to the flash ROM is limited to 100,000. For this reason, try to write to the flash ROM when changing the servo parameter instead of writing with every sequence program. When controlling multiple axes, write the parameters to all axes.

(b) Initialization of the servo amplifier at the startup of linear servo

1) Before turning the power of servo amplifier on, write the servo parameter initial value, which is unique to the linear servo, to the flash ROM of QD75MH□ referring to the sequence program example shown in (3) (a) in this section.

2) After completion of writing to the flash ROM, turn the power of servo amplifier on.

POINT
・For the linear servo motor on the QD75MH□, the parameter error (37) occurs if the initialization of servo parameter is not executed. ・Writing the initial value to the flash ROM is limited for only once at the startup. There is no need to write to the flash ROM at the next power-on or later. If the module write with GX Configurator-QP has been performed, however, initialize the servo parameter again.

(c) When the magnetic pole detection limit switch is not used on the linear servo motor

For changing the setting of the parameter No.PD02, add the following program to the sequence program example shown in (3) (a) in this section, and set the upper stroke limit (FLS) and lower stroke limit (RLS) to automatically ON.

```
TOP   HO   K30197   H0003   K1
```

Servo parameter No.PD02 setting
(When automatically turning on the FLS and RLS)

When using the FLS and RLS on the controller side, however, do not set them to automatically ON because both magnetic pole detection signals and input signals are used.

(4) QD75MH□ buffer address of special setting parameter (No.PS□□)

Description			Initial value	Unit	Buffer memory address			
No.	Symbol	Name			Axis 1	Axis 2	Axis 3	Axis 4
PS01	**LIT1	Linear function selection 1	0301h		30268	30468	30668	30868
PS02	**LIM	Linear encoder resolution setting Numerator	1000		30269	30469	30669	30869
PS03	**LID	Linear encoder resolution setting Denominator	1000		30270	30470	30670	30870
PS04	*LIT2	Linear function selection 2	0003h		30271	30471	30671	30871
PS05	LB1	Linear servo motor control position deviation error detection level	50	mm	30272	30472	30672	30872
PS06	LB2	Linear servo motor control speed deviation error detection level	1000	mm/s	30273	30473	30673	30873
PS07	LB3	Linear servo motor control thrust deviation error detection level	100	%	30274	30474	30674	30874
PS08	*LIT3	Linear function selection 3	0010h		30275	30475	30675	30875
PS09	LPWM	Magnetic pole detection voltage level	30	%	30276	30476	30676	30876
PS10	LFH	At magnetic pole detection current detection method Identification signal frequency	5	Hz	30277	30477	30677	30877
PS11	LIDH	At magnetic pole detection current detection method Identification signal amplitude.	100	%	30278	30478	30678	30878
PS12		For manufacturer setting	500		30279	30479	30679	30879
PS13			0000h		30280	30480	30680	30880
PS14			0000h		30281	30481	30681	30881
PS15			0000h		30282	30482	30682	30882
PS16			0000h		30283	30483	30683	30883
PS17			0000h		30284	30484	30684	30884
PS18			0000h		30285	30485	30685	30885
PS19			0000h		30286	30486	30686	30886
PS20			0000h		30287	30487	30687	30887
PS21			0000h		30288	30488	30688	30888
PS22			0000h		30289	30489	30689	30889
PS23			0000h		30290	30490	30690	30890
PS24			0000h		30291	30491	30691	30891
PS25			0000h		30292	30492	30692	30892
PS26			0000h		30293	30493	30693	30893
PS27			0000h		30294	30494	30694	30894
PS28			0000h		30295	30495	30695	30895
PS29			0000h		30296	30496	30696	30896
PS30			0000h		30297	30497	30697	30897
PS31			0000h		30298	30498	30698	30898
PS32			0000h		30299	30499	30699	30899

5.6 Functions

5.6.1 Linear servo control error detection function

POINT
・For the linear servo control error detection function, the position and speed deviation error detections are enabled as factory-set. (Parameter No.PS04: □□□3)

If the linear servo control gets unstable for some reasons, the linear servo motor may not operate properly. The protective function for detecting this before happens and stopping the operation is the linear servo control error detection function.
As the linear servo control error detection function, there are three types of detection methods: speed deviation, position deviation and thrust deviation. An error is detected when each error detection function is enabled with the setting of the parameter No.PS04 (Linear function selection 2). The detection level can be changed with the parameter Nos. PS05, PS06 and PS07.

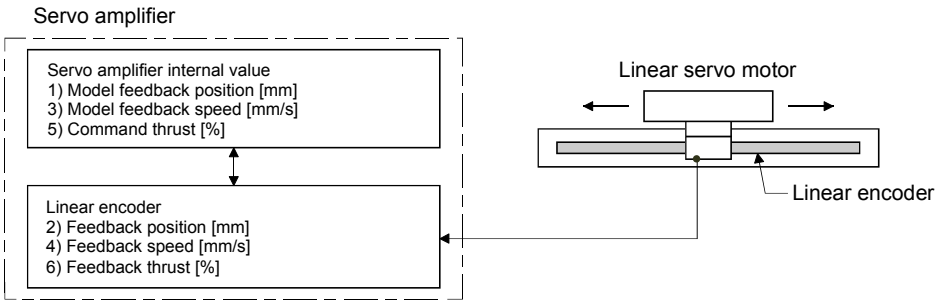

Figure 5.1 Outline of linear servo control error detection function

(1) Position deviation error detection
Set the parameter No.PS04 to "□□□1" to make the position deviation error detection enabled.

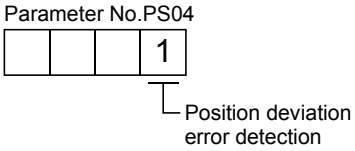

If there is a deviation larger than the setting value (1 to 200mm) of the parameter No.PS05 (Linear servo control position deviation error detection level) after comparing the model feedback position 1) and the feedback position 2) in Figure 5.1, the alarm (Linear servo control error 42) occurs, and the linear servo motor stops. The initial value of parameter No.PS05 is 50mm. Change the setting value as necessary.

(2) Speed deviation error detection

Set the parameter No.PS04 to "□□□2" to make the speed deviation error detection enabled.

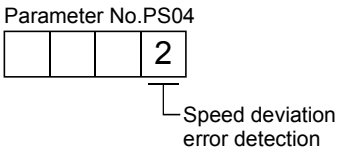

If there is a deviation larger than the setting value (0 to 5000 m/s) of the parameter No.PS06 (Linear servo control speed deviation error detection level) after comparing the model feedback speed 3) and the feedback speed 4) in Figure 5.1, the alarm (Linear servo control error 42) occurs, and the linear servo motor stops. The initial value of parameter No.PS06 is 1,000 mm/s. Change the setting value as necessary.

(3) Thrust deviation error detection

Set the parameter No.PS04 to "□□□4" to make the thrust deviation error detection enabled.

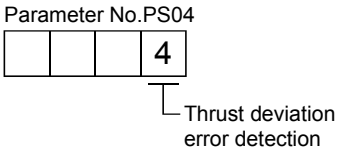

If there is a deviation larger than the setting value (1 to 1,000%) of the parameter No.PS07 (Linear servo control thrust deviation error detection level) after comparing the command thrust 5) and the feedback thrust 6) in Figure 5.1, the alarm (Linear servo control error 42) occurs, and the linear servo motor stops. The initial value of parameter No.PS05 is 100%. Change the setting value as necessary.

(4) Detecting multiple deviation errors

Setting the parameter No.PS04 as shown below allows the linear servo motor to detect multiple deviation errors. For the error detection methods, refer to (1) to (3) in this section.

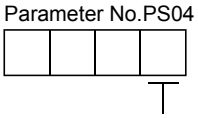

Setting value	Position deviation error detection	Speed deviation error detection	Thrust deviation error detection
3	○	○	
5	○		○
6		○	○
7	○	○	○

5.6.2 Auto tuning function

The auto tuning function during the linear servo operation is the same as that of normal servo, but the calculation method of load inertia moment ratio (J ratio) is different. The load inertia moment ratio (J ratio) on the linear servo is a mass ratio calculated dividing the load mass by the mass of linear servo motor primary side (coil).

Example) Linear servo motor primary side (coil) mass = 2kg
Load mass (excluding the motor primary side (coil) mass) = 4kg
Mass ratio = 4/2 = Twice

Other parameters set with the auto tuning function are the same as those of MR-J3-□B servo amplifier. For details, refer to chapter 6 of the MR-J3-□B Servo Amplifier Instruction Manual.

POINT

- If not meeting with the following conditions, the auto tuning mode 1 may not operate properly.
  - The acceleration/deceleration time constant which takes less than 5s to reach to 2,000mm/s
  - The linear servo motor speed is 150mm/s or faster.
  - The load mass ratio to the mass of linear servo motor primary side (coil) is 100 times or smaller.
  - The acceleration/deceleration thrust is 10% or less of the rated thrust.

5.6.3 Machine analyzer function

The machine analyzer function of MR Configurator is the same as that of MR-J3-□B.

POINT

- Make sure to carry out the machine analyzer function after the magnetic pole detection. If the magnetic pole detection is not executed, the function may not operate properly.
- The stop position at the completion of machine analyzer can be any position.

5.7 Absolute position detection system

When using the linear servo motor for the absolute position detection system, the absolute position linear encoder is required. The backup of absolute position data is performed by the linear encoder. For this reason, there is no need to mount a battery (MR-J3BAT) for encoder on the servo amplifier. Also, the alarm (25) and warnings (92, 9F and E3) related to the absolute position are not detected.

MEMO

6. PARAMETERS

⚠ CAUTION	・Never adjust or change the parameter values extremely as it will make operation instable.

In the MR-J3-□B servo amplifier, the parameters are classified into the following groups on a function basis.

Parameter group	Main description
Basic setting parameters (No.PA□□)	When using this servo amplifier in the position control mode, make basic setting with these parameters.
Gain/filter parameters (No.PB□□)	Use these parameters when making gain adjustment manually.
Extension setting parameters (No.PC□□)	When changing settings such as analog monitor output signal or encoder electromagnetic brake sequence output, use these parameters.
I/O setting parameters (No.PD□□)	Use these parameters when changing the I/O signals of the servo amplifier.
Special setting parameters (No.PS□□)	Use these parameters when setting specially for the linear servo motor.

6.1 Parameter write inhibit (Parameter No.PA19)

POINT

・This parameter is made valid when power is switched off, then on after setting, or when the controller reset has been performed.

In the factory setting, this servo amplifier allows changes to the all parameters, settings. With the setting of parameter No.PA19, write can be disabled to prevent accidental changes.
The next table indicates the parameters which are enabled for reference and write by the setting of parameter No.PA19. Operation can be performed for the parameters marked ○ .

Parameter No.PA19 setting	Setting operation	Basic setting parameters No.PA□□	Gain/filter parameters No.PB□□	Extension setting parameters No.PC□□	I/O setting parameters No.PD□□	Special setting parameters No.PS□□
0000h	Reference	○				
	Write	○				
000Bh	Reference	○	○	○		
	Write	○	○	○		
000Ch	Reference	○	○	○	○	
	Write	○	○	○	○	
000Dh (initial value)	Reference	○	○	○	○	○
	Write	○	○	○	○	○
100Bh	Reference	○				
	Write	Parameter No.PA19 only				
100Dh	Reference	○	○	○	○	○
	Write	Parameter No.PA19 only				

6.2 Basic setting parameters (No.PA□□)

6.2.1 Parameter list

POINT

- For details of the parameters in which columns MR-J3-□B is written, refer to the MR-J3-□B Servo Amplifier Instruction Manual.
- Parameter whose symbol is preceded by * is made valid with the following conditions.
  * : Set the parameter value, switch power off once after setting, and then switch it on again, or perform the controller reset.
  **: Set the parameter value, switch power off once, and then switch it on again.
- Never change the parameters for the manufacturer setting.

No.	Symbol	Name	Initial value	Unit	Reference
PA01		For manufacturer setting	0040h		
PA02	**REG	Regenerative option	0000h		MR-J3-□B
PA03	*ABS	Absolute position detection system	0000h		Section 6.2.2
PA04	*AOP1	Function selection A-1	0000h		MR-J3-□B
PA05		For manufacturer setting	0		
PA06			1		
PA07			1		
PA08	ATU	Auto tuning	0001h		MR-J3-□B
PA09	RSP	Auto tuning response	12		
PA10	INP	In-position range	100	pulse	Section 6.2.2
PA11		For manufacturer setting	1000.0		
PA12			1000.0		
PA13			0000h		
PA14	*POL	Moving direction selection	0		Section 6.2.2
PA15	*ENR	Encoder output pulses	4000		
PA16	*ENR2	Encoder output pulses 2	0		
PA17		For manufacturer setting	0000h		
PA18			0000h		
PA19	*BLK	Parameter write inhibit	000Dh		Section 6.2.2

6.2.2 List of details

Classification	No.	Symbol	Name and function	Initial value	Unit	Setting range
Basic setting parameter	PA01		For manufacturer setting	0040h		
	PA03	*ABS	Absolute position detection system Set this parameter when using the absolute position detection system in the position control mode. 0 0 0 □ └ Selection of absolute position detection system (refer to MR-J3-□B Servo Amplifier Instruction Manual chapter 12) 0: Used in incremental system 1: Used in absolute position detection system If the absolute position detection system is enabled when the linear encoder of the incremental type is being used, parameter error (37) occurs. POINT ・This parameter cannot be used in the speed control mode.	0000h		Refer to the name and function column
	PA10	INP	In-position range Set the range, where In position (INP) is output, in the command pulse unit. Command pulse - Droop pulse Servo motor droop pulse Command pulse In-position range [pulse] In position (INP) ON OFF POINT ・This parameter cannot be used in the speed control mode.	100	pulse	0 to 65535

<table>
<tr><th>Classification</th><th>No.</th><th>Symbol</th><th>Name and function</th><th>Initial value</th><th>Unit</th><th>Setting range</th></tr>
<tr><td rowspan="2">Basic setting parameter</td><td>PA14</td><td>*POL</td><td>Moving direction selection
Select linear servo motor moving direction relative.

<table>
<tr><th rowspan="2">Setting</th><th colspan="2">Linear Servo Motor Moving Direction</th></tr>
<tr><th>When positioning address increases</th><th>When positioning address decreases</th></tr>
<tr><td>0</td><td>Positive direction</td><td>Negative direction</td></tr>
<tr><td>1</td><td>Negative direction</td><td>Positive direction</td></tr>
</table>

The positive/negative directions of the linear servo motor are as shown below.
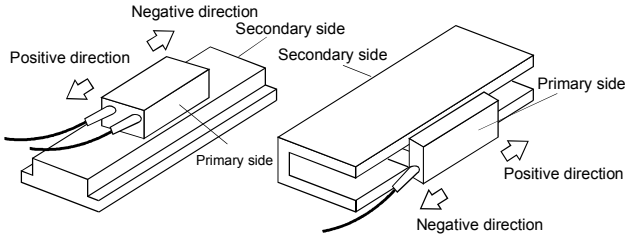

LM-H2 and LM-F series LM-U2 series

POINT
・This parameter cannot be used in the speed control mode.</td><td>0</td><td></td><td>0 1</td></tr>
<tr><td>PA15</td><td>*ENR</td><td>Encoder output pulses
This parameter is made valid when parameter No.PC03 is set to "□□1□ (initial value)".
Set the encoder pulses (A-phase, B-phase) output by the servo amplifier.
Set the encoder pulses output by the servo amplifier by division ratio.
Travel [pulse] of the linear encoder is divided by the set value.
$\text{Output pulse} = \frac{\text{Travel of linear encoder}}{\text{Set value}}$ [pulse]
The number of A/B-phase pulses actually output is 1/4 times greater than the preset number of pulses. Also, the maximum output frequency is 4.6Mpps (after multiplication by 4). Use this parameter within the range.</td><td>4000</td><td></td><td>1 to 65535</td></tr>
</table>

<table>
<tr><th>Classification</th><th>No.</th><th>Symbol</th><th>Name and function</th><th>Initial value</th><th>Unit</th><th>Setting range</th></tr>
<tr><td rowspan="2">Basic setting parameter</td><td>PA16</td><td>*ENR2</td><td>Encoder output pulse 2
This parameter is made valid when parameter No.PC03 is set to "□□3□".
Set the encoder pulses (A-phase, B-phase) output by the servo amplifier.
Set the encoder pulses output by the servo amplifier by parameter No.PA15 and parameter No.PA16.
Travel [pulse] of the linear encoder is multiplied by the set value.

Output pulse = Travel of linear encoder × $\frac{\text{Set value of parameter No.PA15}}{\text{Set value of parameter No.PA16}}$ [pulse]

The number of A/B-phase pulses actually output is 1/4 times greater than the preset number of pulses. Also, the maximum output frequency is 4.6Mpps (after multiplication by 4). Use this parameter within the range.
When the set value is "0 (initial value)", it is internally treated as "1".</td><td>0</td><td></td><td>1 to 65535</td></tr>
<tr><td>PA19</td><td>*BLK</td><td>Parameter write inhibit
<table>
<tr><th rowspan="2">Setting</th><th rowspan="2">Operation</th><th colspan="5">Applicable parameters</th></tr>
<tr><th>No.PA□□</th><th>No.PB□□</th><th>No.PC□□</th><th>No.PD□□</th><th>No.PS□□</th></tr>
<tr><td rowspan="2">0000h</td><td>Reference</td><td>○</td><td></td><td></td><td></td><td></td></tr>
<tr><td>Write</td><td>○</td><td></td><td></td><td></td><td></td></tr>
<tr><td rowspan="2">000Bh</td><td>Reference</td><td>○</td><td>○</td><td>○</td><td></td><td></td></tr>
<tr><td>Write</td><td>○</td><td>○</td><td>○</td><td></td><td></td></tr>
<tr><td rowspan="2">000Ch</td><td>Reference</td><td>○</td><td>○</td><td>○</td><td>○</td><td></td></tr>
<tr><td>Write</td><td>○</td><td>○</td><td>○</td><td>○</td><td></td></tr>
<tr><td rowspan="2">000Dh</td><td>Reference</td><td>○</td><td>○</td><td>○</td><td>○</td><td>○</td></tr>
<tr><td>Write</td><td>○</td><td>○</td><td>○</td><td>○</td><td>○</td></tr>
<tr><td rowspan="2">100Bh</td><td>Reference</td><td>○</td><td></td><td></td><td></td><td></td></tr>
<tr><td>Write</td><td>Parameter No.PA19 only</td><td></td><td></td><td></td><td></td></tr>
<tr><td rowspan="2">100Dh</td><td>Reference</td><td>○</td><td>○</td><td>○</td><td>○</td><td>○</td></tr>
<tr><td>Write</td><td>Parameter No.PA19 only</td><td></td><td></td><td></td><td></td></tr>
</table></td><td>000Dh</td><td></td><td>Refer to the name and function column</td></tr>
</table>

6.3 Gain/Filter parameters (No.PB□□)

6.3.1 Parameter list

POINT

- For details of the parameters in which columns MR-J3-□B is written, refer to the MR-J3-□B Servo Amplifier Instruction Manual.
- Parameter whose symbol is preceded by * is made valid with the following conditions.
  * : Set the parameter value, switch power off once after setting, and then switch it on again, or perform the controller reset.
  **: Set the parameter value, switch power off once, and then switch it on again.
- Never change the parameters for the manufacturer setting.

No.	Symbol	Name	Initial value	Unit	Reference
PB01	FILT	Adaptive tuning mode(Adaptive filter II)	0000h		MR-J3-□B
PB02	VRFT	Vibration suppression control filter tuning mode(Advanced vibration suppression control)	0000h		
PB03		For manufacturer setting	0		
PB04	FFC	Feed forward gain	0	%	MR-J3-□B
PB05		For manufacturer setting	500		
PB06	GD2	Load mass ratio to the linear servo motor primary side (coil)	7.0	Multi-plier (×1)	Section 6.3.2
PB07	PG1	Model loop gain	24	rad/s	MR-J3-□B
PB08	PG2	Position loop gain	37	rad/s	
PB09	VG2	Speed loop gain	823	rad/s	
PB10	VIC	Speed integral compensation	33.7	ms	
PB11	VDC	Speed differential compensation	980		
PB12		For manufacturer setting	0		
PB13	NH1	Machine resonance suppression filter 1	4500	Hz	MR-J3-□B
PB14	NHQ1	Notch form selection 1	0000h		
PB15	NH2	Machine resonance suppression filter 2	4500	Hz	
PB16	NHQ2	Notch form selection 2	0000h		
PB17		Automatic setting parameter			
PB18	LPF	Low-pass filter	3141	rad/s	
PB19	VRF1	Vibration suppression control vibration frequency setting	100.0	Hz	
PB20	VRF2	Vibration suppression control resonance frequency setting	100.0	Hz	
PB21		For manufacturer setting	0.00		
PB22			0.00		
PB23	VFBF	Low-pass filter selection	0000h		MR-J3-□B
PB24	*MVS	Slight vibration suppression control selection	0000h		
PB25		For manufacturer setting	0000h		
PB26	*CDP	Gain changing selection	0000h		MR-J3-□B
PB27	CDL	Gain changing condition	10		
PB28	CDT	Gain changing time constant	1	ms	
PB29	GD2B	Gain changing - load mass ratio to the linear servo motor primary side (coil)	7.0	Multi-plier (×1)	Section 6.3.2
PB30	PG2B	Gain changing position loop gain	37	rad/s	MR-J3-□B
PB31	VG2B	Gain changing speed loop gain	823	rad/s	
PB32	VICB	Gain changing speed integral compensation	33.7	ms	
PB33	VRF1B	Gain changing vibration suppression control vibration frequency setting	100.0	Hz	
PB34	VRF2B	Gain changing vibration suppression control resonance frequency setting	100.0	Hz	

6.3.2 List of details

No.	Symbol	Name and function	Initial value	Unit	Setting range
PB06	GD2	Load mass ratio to the linear servo motor primary side (coil) Used to set the load mass ratio to the mass of the linear servo motor primary side (coil) When auto tuning mode 1 and interpolation mode are selected, the result of auto tuning is automatically used. In this case, it varies between 0 and 100.0. When parameter No.PA08 is set to "□□□2" or "□□□3", this parameter can be set manually.	7.0	Multi-plier (×1)	0 to 300.0
PB29	GD2B	Gain changing - load mass ratio to the linear servo motor primary side (coil) Used to set the load mass ratio to the linear servo motor primary side (coil) when gain changing is valid. This parameter is made valid when the auto tuning is invalid (parameter No.PA08: □□□3).	7.0	Multi-plier (×1)	0 to 300.0

6.4 Extension setting parameters (No.PC□□)

6.4.1 Parameter list

POINT

- For details of the parameters in which columns MR-J3-□B is written, refer to the MR-J3-□B Servo Amplifier Instruction Manual.
- Parameter whose symbol is preceded by * is made valid with the following conditions.

  * : Set the parameter value, switch power off once after setting, and then switch it on again, or perform the controller reset.

  **: Set the parameter value, switch power off once, and then switch it on again.
- Never change the parameters for the manufacturer setting.

No.	Symbol	Name	Initial value	Unit	Reference
PC01	*ERZ	Error excessive alarm level	100	mm	Section 6.4.2
PC02	MBR	Electromagnetic brake sequence output	0	ms	MR-J3-□B
PC03	*ENRS	Encoder output pulses selection	0010h		Section 6.4.2
PC04		For manufacturer setting	0000h		
PC05			0000h		
PC06			0000h		
PC07	ZSP	Zero speed	50	mm/s	Section 6.4.2
PC08		For manufacturer setting	0		
PC09	MOD1	Analog monitor output 1	0000h		Section 6.4.2 Section 6.4.3
PC10	MOD2	Analog monitor output 2	0001h		
PC11	MO1	Analog monitor 1 offset	0	mV	
PC12	MO2	Analog monitor 2 offset	0	mV	
PC13		For manufacturer setting	0		
PC14			0		
PC15			0		
PC16			0000h		
PC17	**COP4	Function selection C-4	0000h		MR-J3-□B
PC18		For manufacturer setting	0000h		
PC19			0000h		
PC20			0000h		
PC21	*BPS	Alarm history clear	0000h		MR-J3-□B
PC22		For manufacturer setting	0000h		
PC23			0000h		
PC24			0000h		
PC25			0000h		
PC26	**COP8	Function selection C-8	0100h		Section 6.4.2
PC27	**COP9	Function selection C-9	0000h		
PC28		For manufacturer setting	0000h		
PC29			0000h		
PC30			0000h		
PC31			0000h		
PC32			0000h		

6.4.2 List of details

Classification	No.	Symbol	Name and function	Initial value	Unit	Setting range
Extension Setting Parameters	PC01	*ERZ	Error excessive alarm level This parameter cannot be used in the speed control mode. Set error excessive alarm level with rotation amount of linear servo motor.	100	mm	1 to 1000
	PC03	*ENRS	Encoder output pulse selection Use to select the, encoder output pulse direction and encoder pulse output setting. 0 0 ☐ ☐ Encoder output pulse phase changing Changes the phases of A, B-phase encoder output pulses. Encoder output pulse setting selection 1: Division ratio setting 2: A, B-phase pulse electronic gear setting (Set with the electronic gear parameter No.PA15 and PA16.)	0010h		Refer to the name and function column
	PC04		For manufacturer setting Do not change these values by any means.	0000h		
	PC05			0000h		
	PC07	ZSP	Zero speed Used to set the output range of the zero speed (ZSP). Zero speed signal detection has hysteresis width of 20mm/s.	50	mm/s	0 to 10000
	PC09	MOD1	Analog monitor 1 output Used to selection the signal provided to the analog monitor 1 (MO1) output. 0 0 0 ☐ Analog monitor 1 (MO1) output selection	0000h		Refer to the name and function column

Encoder output pulse phase changing — Linear Servo motor moving direction

Set value	Positve direction	Negotive direction
0	A-phase / B-phase	A-phase / B-phase
1	A-phase / B-phase	A-phase / B-phase

Analog monitor 1 (MO1) output selection

Setting	Item
0	Servo motor speed (±8V/max. speed)
1	Thrust (±8V/max. thrust) (Note 2)
2	Servo motor speed (+8V/max. speed)
3	Thrust (±8V/max. thrust) (Note 2)
4	Current command (±8V/max. current command)
5	Speed command (±8V/max. speed)
6	Droop pulses (±10V/100 pulses) (Note 1)
7	Droop pulses (±10V/1000 pulses) (Note 1)
8	Droop pulses (±10V/10000 pulses) (Note 1)
9	Droop pulses (±10V/100000 pulses) (Note 1)
D	Bus voltage (±8V/400V)

Note 1. Encoder pulse unit.
2. 8V is outputted at the maximum thrust.

Classification	No.	Symbol	Name and function	Initial value	Unit	Setting range
Extension Setting Parameters	PC10	MOD2	Analog monitor 2 output Used to selection the signal provided to the analog monitor 2 (MO2) output. 0 0 0 □ └ Analog monitor 2 (MO2) output selection The setting details are the same as analog monitor 1 output. For the setting details, refer to parameter No.PC09.	0001h		Refer to the name and function column
	PC13		For manufacturer setting Do not change these values by any means.	0		
	PC14			0		
	PC26	**COP8	Function selection C-8 The communication method of the encoder cable for the serial interface encoder connected to the CN2L connector can be selected. □ 1 0 0 └ Encoder cable communication system selection 0: Two-wire type 1: Four-wire type Incorrect setting will result in an encoder alarm 1 (16) or encoder alarm 2 (20).	0100h		Refer to the name and function column
	PC27	**COP9	Function selection C-9 The polarity setting of the encoder connected to the CN2L connector and the Z-phase connection judgement of the ABZ-phase input interface encoder. 0 □ 0 □ └ Encoder pulse count polarity selection 0: Linear servo motor positive direction and linear encoder pulse increase direction 1: Linear servo motor positive direction and linear encoder pulse decrease direction └ ABZ-phase input interface encoder Z-phase connection judge function selection When the ABZ-phase input interface encoder is connected, the alarm judge function can be selected when the Z-phase is not connected. 0: Alarm valid When not connected, encoder error 2 (20) occurs. 1: Alarm invalid Even when not connected, encoder error 2 (20) does not occur.	0000h		Refer to the name and function column

6.4.3 Analog monitor

The servo status can be output to two channels in terms of voltage. The servo status can be monitored using an ammeter.

(1) Setting

Change the following digits of parameter No.PC09, PC10.

Parameter No.PC09

0	0	0	

Analog monitor (MO1) output selection
(Signal output to across MO1-LG)

Parameter No.PC10

0	0	0	

Analog monitor (MO2) output selection
(Signal output to across MO2-LG)

Parameters No.PC11 and PC12 can be used to set the offset voltages to the analog output voltages. The setting range is between −999 and 999mV.

Parameter No.	Description	Setting range [mV]
PC11	Used to set the offset voltage for the analog monitor 1 (MO1).	−999 to 999
PC12	Used to set the offset voltage for the analog monitor 2 (MO2).	

(2) Set content

The servo amplifier is factory-set to output the servo motor speed to analog monitor 1 (MO1) and the torque to analog monitor (MO2). The setting can be changed as listed below by changing the parameter No.PC14 and PC12 value.

Refer to (3) for the measurement point.

Setting	Output item	Description	Setting	Output item	Description
0	Servo motor speed	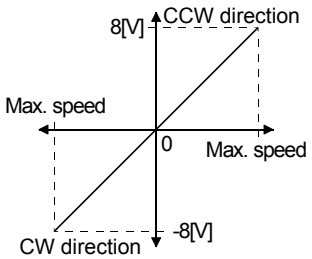	1	Thrust (Note 2)	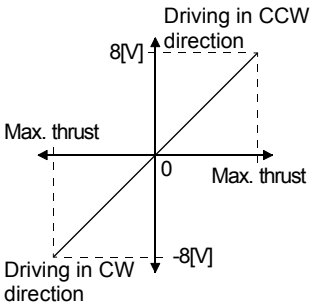
2	Servo motor speed	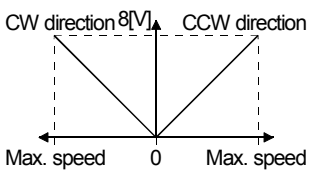	3	Thrust (Note 2)	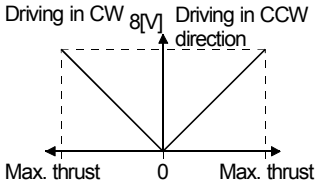
4	Current command	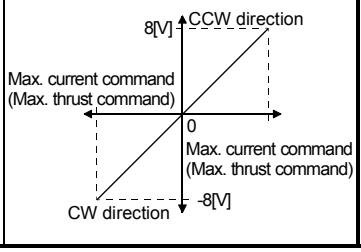	5	Speed command	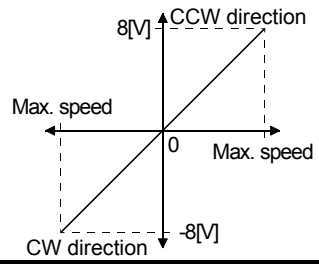

Setting	Output item	Description	Setting	Output item	Description
6	Droop pulses (Note 1) (±10V/100 pulses)	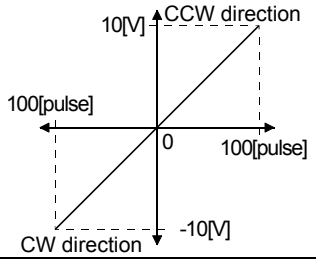	7	Droop pulses (Note 1) (±10V/1000 pulses)	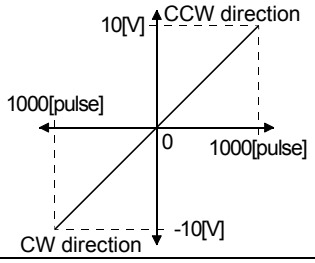
8	Droop pulses (Note 1) (±10V/10000 pulses)	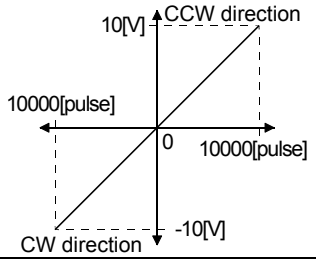	9	Droop pulses (Note 1) (±10V/100000 pulses)	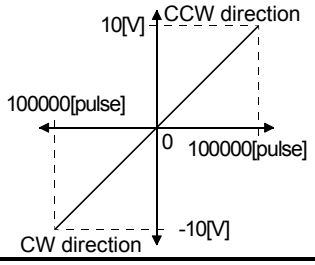
D	Bus voltage	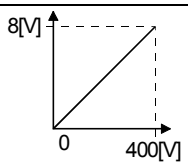			

Note 1. Encoder pulse unit.
2. Outputs 8V at the maximum torque.

(3) Analog monitor block diagram

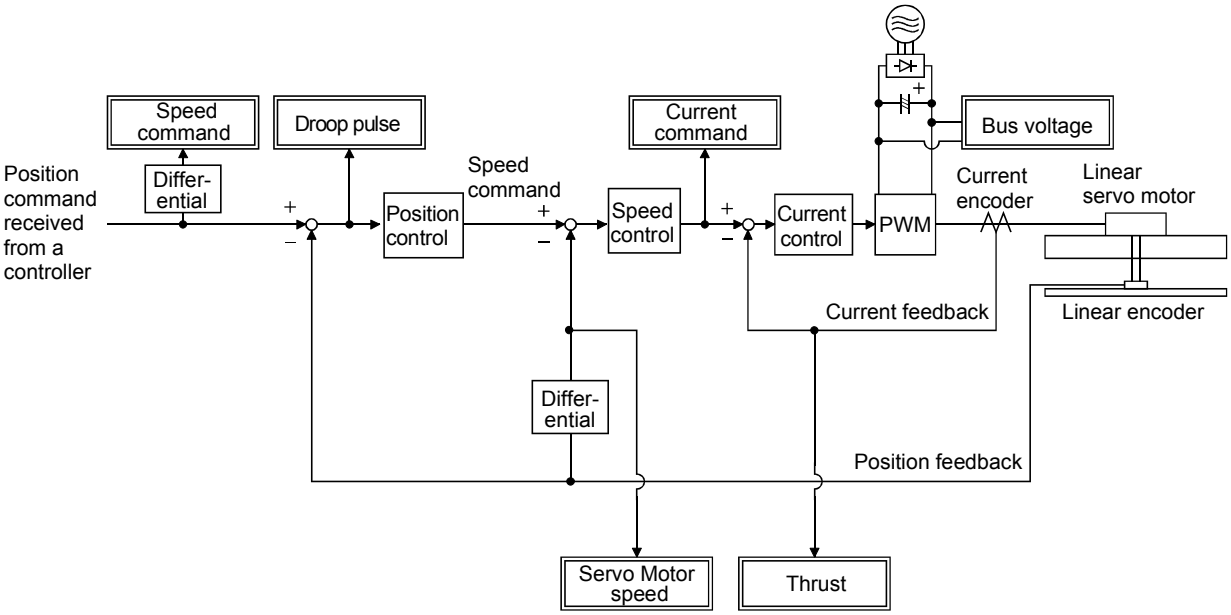

6.5 I/O setting parameters (No.PD□□)

6.5.1 Parameter list

POINT

- For details of the parameters in which columns MR-J3-□B is written, refer to the MR-J3-□B Servo Amplifier Instruction Manual.
- Parameter whose symbol is preceded by * is made valid with the following conditions.
  * : Set the parameter value, switch power off once after setting, and then switch it on again, or perform the controller reset.
  **: Set the parameter value, switch power off once, and then switch it on again.
- Never change the parameters for the manufacturer setting.

No.	Symbol	Name	Initial value	Unit	Reference
PD01		For manufacturer setting	0000h		
PD02	*DIA2	Input signal automatic ON selection	0000h		Section 6.5.2
PD03		For manufacturer setting	0020h		
PD04			0021h		
PD05			0000h		
PD06			0000h		
PD07	*D01	Output signal device selection 1(CN3-pin 13)	0005h		MR-J3-□B
PD08	*D02	Output signal device selection 2(CN3-pin 9)	0004h		
PD09	*D03	Output signal device selection 3(CN3-pin 15)	0003h		
PD10		For manufacturer setting	0000h		
PD11			0004h		
PD12			0000h		
PD13			0000h		
PD14	*DOP3	Function selection D-3	0000h		MR-J3-□B
PD15		For manufacturer setting	0000h		
PD16			0000h		
PD17			0000h		
PD18			0000h		
PD19			0000h		
PD20			0000h		
PD21			0000h		
PD22			0000h		
PD23			0000h		
PD24			0000h		
PD25			0000h		
PD26			0000h		
PD27			0000h		
PD28			0000h		
PD29			0000h		
PD30			0000h		
PD31			0000h		
PD32			0000h		

6.5.2 List of details

Classification	No.	Symbol	Name and function	Initial value	Unit	Setting range
I/O Setting Parameters	PD02	*DIA2	Input signal automatic ON selection Select the input devices to be automatically turned ON. 0 0 0 □ □□□□ Signal name / Initial value BIN / Initial value HEX Upper stroke limit (FLS): BIN 0 Lower stroke limit (RLS): BIN 0 BIN 0 BIN 0 HEX 0 BIN 0: Used as external input signal BIN 1: Automatic ON For example, to turn ON RLS, the setting is "□□□2". When the upper stroke limit (FLS) or the lower stroke limit (RLS) is used on the controller side, do not set to automatically ON since the magnetic pole detection signal is shared with the input signal.	0000h		Refer to the name and function column

6.6 Special setting parameters (No.PS□□)

6.6.1 Parameter list

POINT

- For details of the parameters in which columns MR-J3-□B is written, refer to the MR-J3-□B Servo Amplifier Instruction Manual.
- Parameter whose symbol is preceded by * is made valid with the following conditions.
  * : Set the parameter value, switch power off once after setting, and then switch it on again, or perform the controller reset.
  **: Set the parameter value, switch power off once, and then switch it on again.
- Never change the parameters for the manufacturer setting.

No.	Symbol	Name	Initial value	Unit	Reference
PS01	**LIT1	Linear function selection 1	0301h		Section 6.6.2
PS02	**LIM	Linear encoder resolution setting Numerator	1000		
PS03	**LID	Linear encoder resolution setting Denominator	1000		
PS04	**LIT2	Linear function selection 2	0003h		
PS05	LB1	Linear servo motor control position deviation error detection level	50	mm	
PS06	LB2	Linear servo motor control speed deviation error detection level	1000	mm/s	
PS07	LB3	Linear servo motor control thrust deviation error detection level	100	%	
PS08	*LIT3	Linear function selection 3	0010h		
PS09	LPWM	Magnetic pole detection voltage level	30	%	
PS10	LFH	At magnetic pole detection current detection method Identification signal frequency	5	Hz	
PS11	LIDH	At magnetic pole detection current detection method Identification signal amplitude	100	%	
PS12		For manufacturer setting	500		
PS13			0000h		
PS14			0000h		
PS15			0000h		
PS16			0000h		
PS17			0000h		
PS18			0000h		
PS19			0000h		
PS20			0000h		
PS21			0000h		
PS22			0000h		
PS23			0000h		
PS24			0000h		
PS25			0000h		
PS26			0000h		
PS27			0000h		
PS28			0000h		
PS29			0000h		
PS30			0000h		
PS31			0000h		
PS32			0000h		

6.6.2 List of details

Classification	No.	Symbol	Name and function	Initial value	Unit	Setting range
Special setting parameters	PS01	*LIT1	Linear function selection 1 The magnetic pole detection setting, the stop interval setting at home position return, the valid/invalid setting of the linear servo motor thermistor can be selected. (Refer to section 5.2) [ ][ ]0[ ] Linear servo motor magnetic pole detection setting 0: Magnetic pole detection invalid (Absolute position linear encoder is valid.) 1: Magnetic pole always valid Stop interval setting at home position return The stop interval for the dog method home position return is set. Setting value / Movement cycle [pulse] 0: 8192 1: 131072 2: 262144 3: 1048576 4: 4194304 5: 16777216 6: 67108864 Linear servo motor thermistor valid/invalid setting 0: Valid 1: Invalid When the linear servo motor without thermistor is used, this setting is invalid.	0301h		Refer to the name and function column
	PS02	**LIM	Linear encoder resolution setting Numerator Set the linear encoder resolution in 1μm unit. (Refer to section 5.1.3) Set the numerator for parameter No.PS02. Linear encoder resolution (μm) = LIM/LID	1000		1 to 65535
	PS03	**LID	Linear encoder resolution setting Denominator Set the denominator for parameter No.PS03	1000		1 to 65535
	PS04	*LIT2	Linear function selection 2 Linear servo motor control error detection function and linear servo motor control error reset can be selected. [ ]0[0][ ] Linear servo motor control error detection function selection (Refer to section 5.6.1) 0: Invalid 1: Position deviation error detection valid 2: Speed deviation error detection valid 3: Position/speed detection deviation error detection valid 4: Thrust deviation error detection valid 5: Position/thrust deviation error detection valid 6: Speed/thrust deviation error detection valid 7: Position/speed/thrust deviation error detection valid Linear servo motor control error detection reset selection Set the controller reset condition of the linear servo motor control error detection (42). 0: Reset impossible (Reset by switching OFF is possible.) 1: Reset possible	0003h		Refer to the name and function column
	PS05	LBI	Linear servo motor control position deviation error detection level Used to set the position deviation error detection level of the linear servo motor control error detection. When the difference between the model feedback position and the feedback position is bigger than this setting value, the linear servo motor control error is detected (42). (Refer to section 5.6.1)	50	mm	1 to 1000

Classification	No.	Symbol	Name and function	Initial value	Unit	Setting range
Special setting parameters	PS06	LB2	Linear servo motor control speed deviation error detection level Used to set the speed deviation error detection level of the linear servo motor control error detection. When the difference between the model feedback speed and the feedback speed is bigger than this setting value, the linear servo motor control error is detected (42). (Refer to section 5.6.1)	1000	mm/s	1 to 5000
	PS07	LB3	Linear servo motor control thrust deviation error detection level Used to set the thrust deviation error detection level of the linear servo motor control error detection. When the difference between the command thrust and the feedback thrust is bigger than this setting value, the linear servo motor control error is detected (42). (Refer to section 5.6.1)	100	%	1 to 1000
	PS08	*LIT3	Linear function selection 3 The magnetic pole detection method can be selected. (Refer to section 5.2.6) 0 0 1 □ └ Selection of magnetic pole 0: Detection method 1: Position detection method 2: Current detection method	0010h		Refer to the name and function column
	PS09	LPWM	Magnetic pole detection voltage level Used to set the direct current exciting voltage level during the magnetic pole detection. When the overload alarm (50 and 51) or overcurrent alarm (32) occurs, set the smaller value. When the initial magnetic pole detection error occurs during the magnetic pole detection, set the bigger value. (Refer to section 5.2.3)	30	%	0 to 100
	PS10	LFH	At magnetic pole detection current detection method Identification signal frequency Used to set the identification signal frequency of the magnetic pole detection current detection method. This parameter is made valid when parameter No.PS08 is set to "□□□1" or "□□□2". The upper limit of the setting value must be under half of the speed loop response frequency. (Refer to section 5.2.6)	5	Hz	1 to 50
	PS11	LIDH	At magnetic pole detection current detection method Identification signal amplitude. Used to designate the identification signal amplitude of the magnetic pole detection current detection method. This parameter is made valid when parameter No.PS08 is set to "□□□1" or "□□□2". When the overload alarm (50 and 51) occurs, set the smaller value. (Refer to section 5.2.6)	100	%	50 to 100
	PS12		For manufacturer setting Do not change these values by any means.	500		
	PS13			0000h		
	PS14			0000h		
	PS15			0000h		
	PS16			0000h		
	PS17			0000h		
	PS18			0000h		
	PS19			0000h		
	PS20			0000h		
	PS21			0000h		
	PS22			0000h		
	PS23			0000h		

Classification	No.	Symbol	Name and function	Initial value	Unit	Setting range
Special setting parameters	PS24		For manufacturer setting Do not change these values by any means.	0000h		
	PS25			0000h		
	PS26			0000h		
	PS27			0000h		
	PS28			0000h		
	PS29			0000h		
	PS30			0000h		
	PS31			0000h		
	PS32			0000h		

7. TROUBLESHOOTING

> **POINT**
> - Alarms and warnings are basically the same as those of the MR-J3-□B servo amplifier. Here, items different from the MR-J3-□B servo amplifier are described.
> - As soon as an alarm occurs, make the Servo off status and interrupt the main circuit power.

If an alarm/warning has occurred, refer to this chapter and remove its cause.

7.1 Alarms and warning list

When an fault occurs during operation, the corresponding alarm or warning is displayed.
If any alarm has occurred, refer to section 7.2, and section 8.2 of the MR-J3-□B Servo Amplifier Instruction Manual; if any warning has occurred, refer to section 7.3, and section 8.3 of the MR-J3-□B Servo Amplifier Instruction Manual, and take the appropriate action. When an alarm occurs, ALM turns OFF.
After its cause has been removed, the alarm can be deactivated in any of the methods marked ○ in the alarm deactivation column.

	Display	Name	Alarm deactivation		
			Power OFF→ON	Error reset	CPU reset
Alarms	10	Undervoltage	○	○	○
	12	Memory error1 (RAM)	○		
	13	Clock error	○		
	15	Memory error2 (EEP-ROM)	○		
	16	Encoder error1 (At power on)	○		
	17	Board error	○		
	19	Memory error3 (Flash-ROM)	○		
	20	Encoder error2	○		
	24	Main circuit error	○	○	○
	27	Initial magnetic pole detection error	○	○	○
	28	Linear encoder error2	○		
	2A	Linear encoder error1	○		
	30	Regenerative error	(Note 1)○	(Note 1)○	(Note 1)○
	31	Overspeed	○	○	○
	32	Overcurrent	○		
	33	Overvoltage	○	○	○
	34	Receive error 1	○	(Note 2)○	○
	35	Command frequency alarm	○	○	○
	36	Receive error 2	○	○	○
	37	Parameter error	○		
	42	Linear servo control error	○	(Note 3)○	(Note 3)○
	45	Main circuit device overheat	(Note 1)○	(Note 1)○	(Note 1)○
	46	Linear servo motor overheat	(Note 1)○	(Note 1)○	(Note 1)○
	47	Cooling fan alarm	○		
	50	Overload1	(Note 1)○	(Note 1)○	(Note 1)○
	51	Overload2	(Note 1)○	(Note 1)○	(Note 1)○
	52	Error excessive	○	○	○
	8A	USB communication time-out error	○	○	○
	8E	USB communication error	○	○	○
	888	Watchdog	○		

	Display	Name
Warnings	96	Home position setting error
	E0	Excessive regeneration warning
	E1	Overload warning 1
	E2	Linear servo motor overheat warning
	E4	Parameter warning
	E6	Servo forced stop warning
	E7	Controller emergency stop warning
	E8	Cooling fan speed reduction warning
	E9	Main circuit off warning
	EC	Overload warning 2
	ED	Output watt excess warning

Note 1. Deactivate the alarm about 30 minutes of cooling time after removing the cause of occurrence.
2. In some controller communication status, the alarm factor may not be removed.
3. The alarm can be deactivated by setting parameter No.PS04 to "1□□□".

7.2 Remedies for alarms

⚠ CAUTION

- When any alarm has occurred, eliminate its cause, ensure safety, then reset the alarm, and restart operation. Otherwise, injury may occur.
- As soon as an alarm occurs, mark servo-off and power off the main circuit and control circuit.

POINT

- When any of the following alarms has occurred, do not deactivate the alarm and resume operation repeatedly. To do so will cause the servo amplifier/linear servo motor to fail. Remove the cause of occurrence, and leave a cooling time of more than 30 minutes before resuming operation. To protect the main circuit elements, any of these servo alarms cannot be deactivated from the servo system controller until the specified time elapses after its occurrence. Judging the load changing condition until the alarm occurs, the servo amplifier calculates this specified time automatically.
- Regenerative error (30)
- Overload 1 (50)
- Overload 2 (51)
- The alarm can be deactivated by switching power off, then on or by the error reset command・CPU reset from the servo system controller. For details, refer to section 8.1.

When an alarm occurs, the trouble (ALM) switches off and the dynamic brake is operated to stop the linear servo motor. At this time, the display indicates the alarm No.
The linear servo motor comes to a stop. Remove the cause of the alarm in accordance with this section. Use the MR Configurator to refer to a factor of alarm occurrence.

Display	Name	Definition	Cause	Action
10	Undervoltage	Refer to chapter 8 of the MR-J3-□B Servo Amplifier Instruction Manual.		
12	Memory error1 (RAM)			
13	Clock error			
15	Memory error2 (EEP-ROM)			
16	Encoder error1 (At power on)	Communication error occurred between serial communications type encoder and servo amplifier.	1. Encoder connector (CN2L) disconnected.	Connect correctly.
			2. Encoder fault	Change the linear encoder.
			3. Encoder cable faulty (Wire breakage or shorted)	Repair or change the cable.
			4. Encoder cable type (2-wire, 4-wire) selection was wrong in parameter setting.	Correct the setting in the fourth digit of parameter No.PC26.
		Communication error occurred between ABZ differential output type and servo amplifier.	5. Encoder connector (CN2L) disconnected.	Connect correctly.
			6. Encoder fault	Change the linear encoder.
			7. Encoder cable faulty (Wire breakage or shorted The connection between PSEL and LG is not established.)	Repair or change the cable.

Display	Name	Definition	Cause	Action
17	Board error	Refer to chapter 8 of the MR-J3-□B Servo Amplifier Instruction Manual.		
19	Memory error3 (Flash-ROM)			
20	Encoder error2	Communication error occurred between serial communications type encoder and servo amplifier.	1. Encoder connector (CN2L) disconnected.	Connect correctly.
			2. Encoder fault	Change the linear encoder.
			3. Encoder cable faulty (Wire breakage or shorted)	Repair or change the cable.
			4. Encoder cable type (2-wire, 4-wire) selection was wrong in parameter setting.	Correct the setting in the fourth digit of parameter No.PC26.
		Communication error occurred between ABZ differential output type and servo amplifier.	5. Encoder connector (CN2L) disconnected.	Connect correctly.
			6. Encoder fault	Change the linear encoder.
			7. Encoder cable faulty (Wire breakage or shorted. The connection between PSEL and LG is not established.)	1. Repair or change the cable. 2. When the linear encoder does not have a Z-phase, set parameter No.PC27 to "□1□□".
24	Main circuit error	Refer to chapter 8 of the MR-J3-□B Servo Amplifier Instruction Manual.		
27	Initial magnetic pole detection error	Initial magnetic pole detection did not operate normally	1. Machine struck.	Perform the magnetic pole detection in order not to strike the machine.
			2. Accuracy at initial magnetic pole detection is bad.	Check the parameter No.PS09 setting (magnetic pole detection voltage level).
			3. Poor wiring of U, V, and W.	Correct the wiring.
			4. Linear encoder signal resolution is different from the setting value.	Check the parameter No.PS02 and PS03 setting (linear encoder resolution setting). Check the installation of the linear encoder.
			5. Mismatch of the linear encoder installation direction.	Check the installation direction of the linear encoder. Check the encoder pulse count polarity selection in parameter No.PC27. Check the linear servo motor control error detection level.
			6. Magnetic pole detection limit switch is not on.	Connect the magnetic detection limit switch correctly. Set the magnetic pole detection limit switch to automatically ON by the parameter No.PD02 setting. (When the magnetic pole detection limit switch is used on the controller side, do not set to automatically ON since it is shared with the input signal.)
28	Linear encoder error2	Working environment of linear encoder is not normal.	1. The temperature of linear encoder is high.	Check the temperature of linear encoder and contact with the linear encoder manufacturer.
			2. The signal level of linear encoder has dropped.	Check the installation of the linear encoder.

Display	Name	Definition	Cause	Action
2A	Linear encoder error 1	An alarm is output from the linear encoder.	1. The speed of linear encoder has exceeded the range of use.	Change the speed of linear encoder within the range of use.
			2. Noise entered.	Take the noise reduction measures.
			3. Alarm of the linear encoder.	Contact with the linear encoder manufacturer.
			4. Defective installation positions of the scale and head.	Adjust the positions of the scale and head.
30	Regenerative error	Refer to chapter 8 of the MR-J3-□B Servo Amplifier Instruction Manual.		
31	Overspeed			
32	Overcurrent			
33	Overvoltage			
34	Receive error 1			
35	Command frequency alarm			
36	Receive error 2			
37	Parameter error			
42	Linear servo control error	Linear servo motor control error occurred.	1. Linear encoder signal resolution is different from the setting value.	Check the settings of parameter No.PS02 and PS03 setting (linear encoder resolution setting). Check the installation of the linear encoder.
			2. Initial magnetic pole detection has not been performed.	Perform initial magnetic pole detection.
			3. Mismatch of the linear encoder installation direction.	Check the installation direction of the linear encoder. Check the encoder pulse count polarity selection in parameter No.PC27.
			4. The position deviation exceeded the detection level.	Check the operation condition. Check the setting of parameter No.PS05 (linear servo motor control position deviation error detection level) as required.
			5. The speed deviation exceeded the detection level.	Check the operation condition. Check the setting of parameter No.PS06 (linear servo motor control speed deviation error detection level) as required.
			6. Thrust deviation exceeded the detection level.	Check the operation condition. Check the parameter No.PS07 setting (linear servo motor control thrust deviation error detection level) as necessary.
			7. Wrong connection of linear servo motor. Servo amplifier's output terminals U, V, W do not match with linear servo motor's input terminals U, V, W.	Connect correctly.
45	Main circuit device overheat	Refer to chapter 8 of the MR-J3-□B Servo Amplifier Instruction Manual.		

Display	Name	Definition	Cause	Action
46	Linear servo motor overheat	Linear servo motor temperature rose. (Detected by thermistor)	1. Ambient temperature of linear servo motor is over 40℃ (104℉).	Check environment so that ambient temperature is 0 to 40℃ (32 to 104℉).
			2. Linear servo motor is overloaded.	1. Reduce load. 2. Check operation pattern. 3. Use linear servo motor that provides larger output.
			3. Thermistor in linear servo motor is faulty.	Replace the primary side (coil) of linear servo motor.
			4. Thermistor wire breakage.	Repair the wire.
			5. Thermistor connector (CN2) disconnected.	Connect correctly.
47	Cooling fan alarm	Refer to chapter 8 of the MR-J3-□B Servo Amplifier Instruction Manual.		
50	Overload1	Load exceeded overload protection characteristic of servo amplifier.	1. Servo amplifier is used in excess of its continuous output current.	1. Reduce load. 2. Check operation pattern. 3. Use linear servo motor that provides larger output.
			2. Servo system is instable and hunting.	1. Repeat acceleration/ deceleration to execute auto tuning. 2. Change auto tuning response setting. 3. Set auto tuning to OFF and make gain adjustment manually.
			3. Machine struck something.	1. Check operation pattern. 2. Install limit switches.
			4. Wrong connection of linear servo motor. Servo amplifier's output terminals U, V, W do not match linear servo motor's input terminals U, V, W.	Connect correctly.
			5. Encoder faulty. Checking method When the linear encoder is moved with the servo off, the cumulative feedback pulses do not vary in proportion to the movement amount of the linear encoder, and the indication skips or returns midway.	Change the linear encoder.
			6. Linear encoder signal resolution is different from the setting value.	Check the parameter No.PS02 and PS03 setting (linear encoder resolution setting). Confirm the linear encoder installation.
			7. Initial magnetic pole detection has not been performed.	Perform initial magnetic pole detection.
			8. Discordance of the linear encoder mounting direction.	Confirm the linear encoder mounting direction. Check the encoder pulse count polarity selection in the parameter No.PC27 setting.
			9. After Overload 2 (51) occurred, turn OFF/ON the power supply to clear the alarm. Then the overload operation is repeated.	1. Reduce load. 2. Check operation pattern. 3. Use servo motor that provides larger output.

Display	Name	Definition	Cause	Action
51	Overload2	Machine collision or the like caused max. output current to flow successively for several seconds.	1. Machine struck something.	1. Check operation pattern. 2. Install limit switches.
			2. Wrong connection of linear servo motor. Servo amplifier's output terminals U, V, W do not match linear servo motor's input terminals U, V, W.	Connect correctly.
			3. Servo system is instable and hunting.	1. Repeat acceleration/deceleration to execute auto tuning. 2. Change auto tuning response setting. 3. Set auto tuning to OFF and make gain adjustment manually.
			4. Encoder faulty. Checking method When the linear encoder is moved with the servo off, the cumulative feedback pulses do not vary in proportion to the movement amount of the linear encoder, and the indication skips or returns midway.	Change the linear encoder.
			5. Linear encoder signal resolution is different from the setting value.	Check the parameter No.PS02 and PS03 setting (linear encoder resolution setting). Confirm the linear encoder installation.
			6. Initial magnetic pole detection has not been performed.	Perform initial magnetic pole detection.
			7. Discordance of the linear encoder mounting direction.	Confirm the linear encoder mounting direction. Check the encoder pulse count polarity selection in the parameter No.PC27 setting.
52	Error excessive	Refer to chapter 8 of the MR-J3-□B Servo Amplifier Instruction Manual.		
8A	USB communication time-out error			
8E	USB communication error			
888	Watchdog			

7.3 Remedies for warnings

POINT

- When any of the following alarms has occurred, do not resume operation by switching power of the servo amplifier OFF/ON repeatedly. The servo amplifier and linear servo motor may become faulty. If the power of the servo amplifier is switched OFF/ON during the alarms, allow more than 30 minutes for cooling before resuming operation.
  - Excessive regenerative warning (E0)
  - Overload warning 1 (E1)

If E6, E7 or E9 occurs, the servo off status is established. If any other warning occurs, operation can be continued but an alarm may take place or proper operation may not be performed.
Remove the cause of warning according to this section. Use the MR Configurator to refer to a factor of warning occurrence.

Display	Name	Definition	Cause	Action
96	Home position setting error	Refer to chapter 8 of the MR-J3-□B Servo Amplifier Instruction Manual.		
E0	Excessive regeneration warning			
E1	Overload warning 1			
E2	Linear servo motor overheat warning	Linear servo motor temperature rose and exceeded 85% of the alarm occurrence level.	1. Ambient temperature of linear servo motor is over 40℃ (104℉).	Check environment so that ambient temperature is 0 to 40℃ (32 to 104℉).
			2. Linear servo motor is overloaded.	1. Reduce load. 2. Check operation pattern. 3. Use linear servo motor that provides larger output.
			3. Thermistor in linear servo motor is faulty.	Replace the primary side of linear servo motor.
E4	Parameter warning	Refer to chapter 8 of the MR-J3-□B Servo Amplifier Instruction Manual.		
E6	Servo forced stop warning			
E7	Controller emergency stop warning			
E8	Cooling fan speed reduction warning			
E9	Main circuit off warning			
EC	Overload warning 2			
ED	Output watt excess warning			

7.4 Detailed explanation of linear encoder error 1 (2A)

If the cause of Linear encoder error 1(2A) occurrence is not identified, confirm the details shown on the following table according to the alarm detailed information for the alarm history display of MR Configurator, and then contact with the linear encoder manufacturer.

Table 7.1 Detailed explanation of linear encoder error 1 (2A) for each manufacturer

Detail information bit	Linear encoder error 1 (2A) details				
	Mitutoyo Corporation		Sony Manufacturing Systems Corporation	Heidenhain Corporation	Renishaw Inc.
	AT343A/AT543A	ST741/ST743			
Bit7	Optical overspeed	Servo alarm	—	Overspeed error	—
Bit6	ROM・RAM error	Signal strength alarm	—	—	Overspeed
Bit5	EEPROM error	Signal strength error	Encoder alarm	EEPROM error	—
Bit4	CPU error	Transducer error	—	CPU error	—
Bit3	Capacitive error	ABS detection error	—	ABS data error	—
Bit2	Photoelectric error	Hardware error	—	INC data error	—
Bit1	Photoelectric・capacitive data mismatch	Initialization error	Encoder warning	Scale level error INC/ABS data mismatch error —	Level error
Bit0	Initialization error	Overspeed error	—	Initialization error	—

As an example, the following describes the detailed information when Linear encoder error 1(2A) occurs in the linear encoder AT343A manufactured by Mitutoyo Corporation.

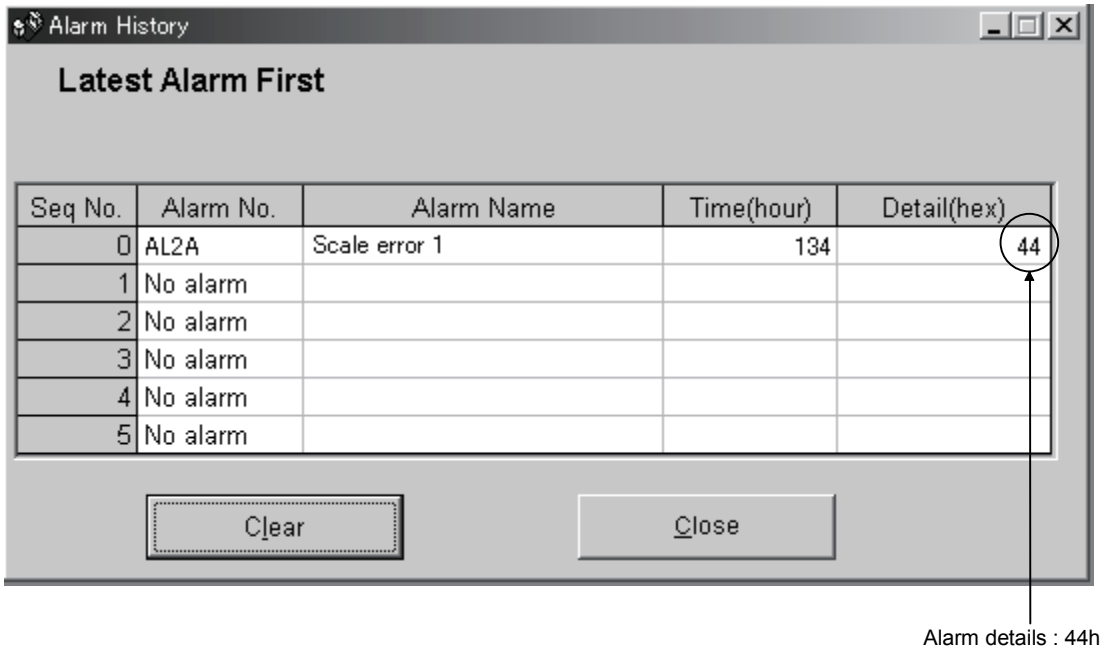

In this case, the alarm detailed information of Linear encoder error 1(2A) is "44". This numeral is indicated in hexadecimal number. Convert "44" of hexadecimal number to a binary-coded form as shown below.

	bit7	bit6	bit5	bit4	bit3	bit2	bit1	bit0
44h=	0	1	0	0	0	1	0	0

The digits for bit6 and bit2 are "1". Check the details of the bit being "1" in Table 7.1. In this case, the occurrences of ROM・RAM error (bit6) and Photoelectric error (bit2) are identified.

8. SERVO AMPLIFIER OUTLINE DRAWINGS

POINT
・For the outline drawings of connectors, refer to section 9.2 of the MR-J3-□B Servo Amplifier Instruction Manual. For the connector for CN2L, refer to the outline drawings of the connector for CN2 since it is the same as that for CN2.

(1) MR-J3-10B-RJ004・MR-J3-20B-RJ004

[Unit: mm]

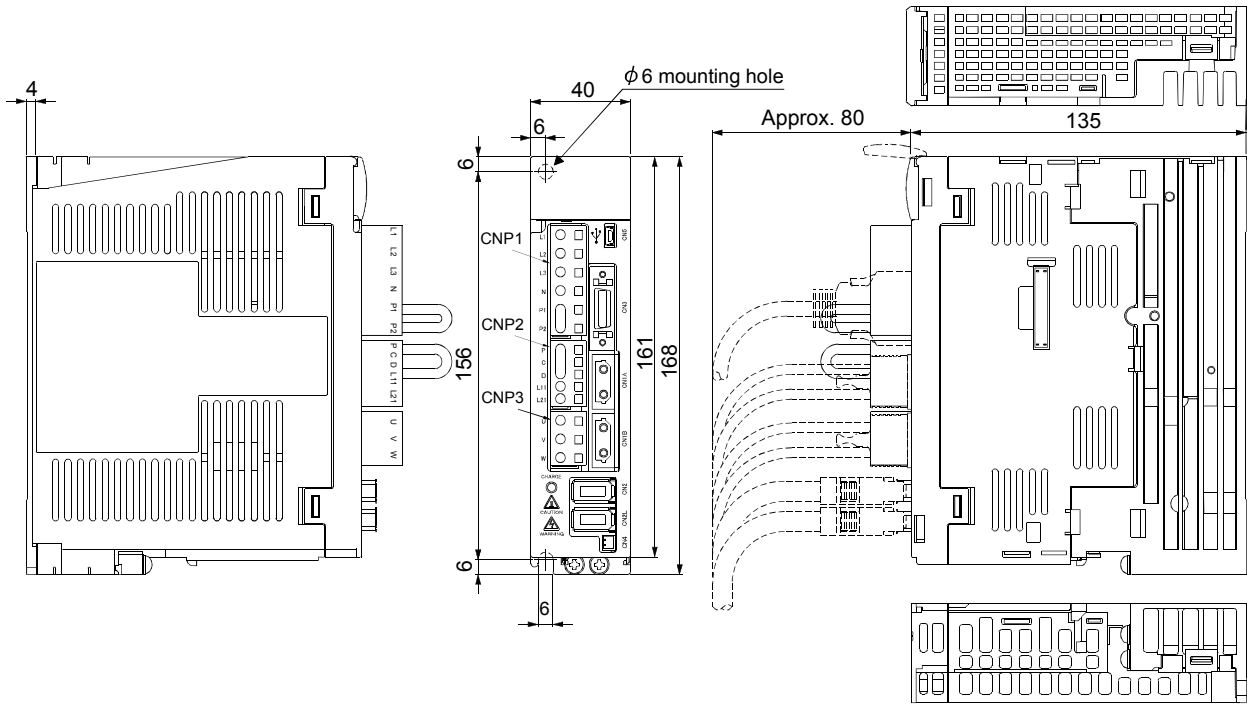

Mass: 0.8 [kg] (1.76 [lb])

Terminal signal layout

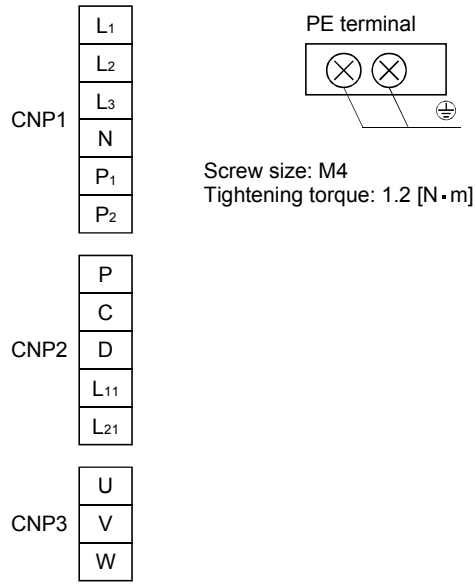

PE terminal

Screw size: M4
Tightening torque: 1.2 [N・m] (10.6 [lb・in])

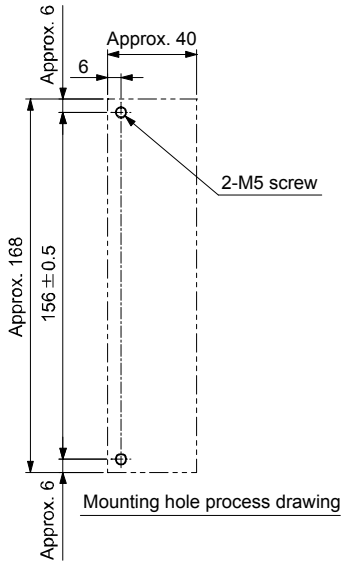

Mounting screw
Screw size: M5
Tightening torque: 3.24 [N・m] (28.7 [lb・in])

(2) MR-J3-40B-RJ004 ▪ MR-J3-60B-RJ004

[Unit: mm]

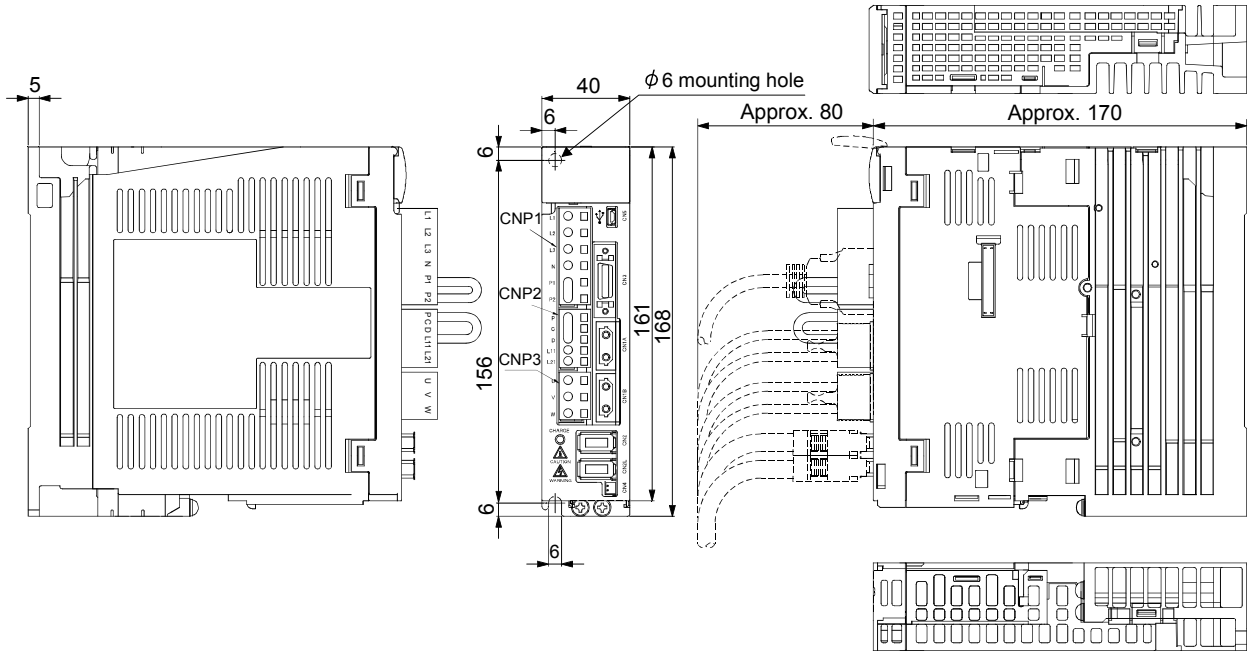

Mass: 1.0 [kg] (2.21 [lb])

Terminal signal layout

CNP1	L_1, L_2, L_3, N, P_1, P_2
CNP2	P, C, D, L_{11}, L_{21}
CNP3	U, V, W

PE terminal

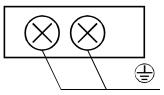

Screw size: M4
Tightening torque: 1.2 [N・m] (10.6 [lb・in])

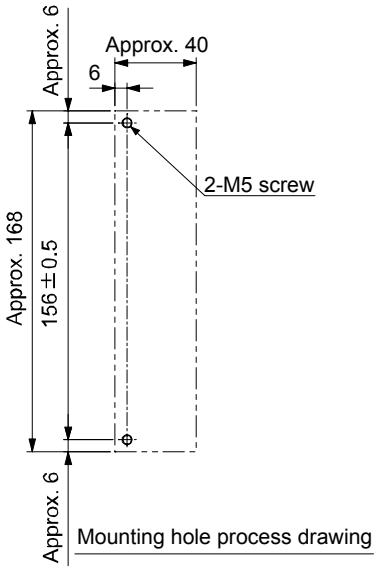

Mounting screw
Screw size: M5
Tightening torque: 3.24 [N・m] (28.7 [lb・in])

(3) MR-J3-70B-RJ004 ・MR-J3-100B-RJ004

[Unit: mm]

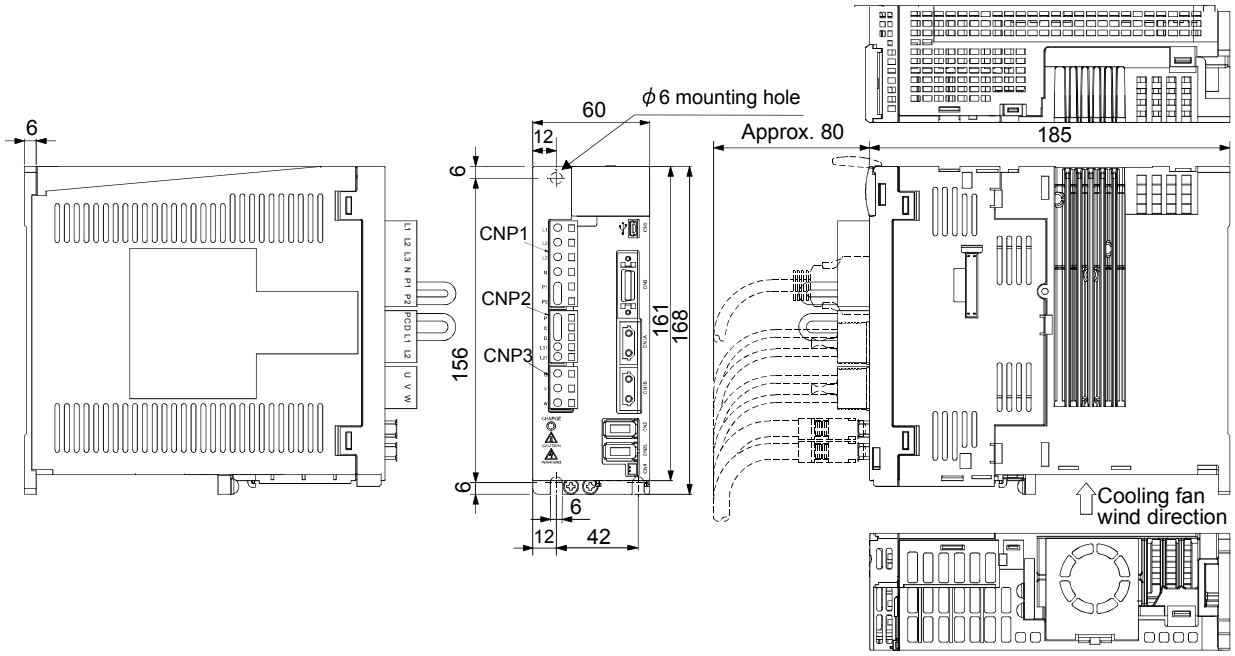

Mass: 1.4 [kg] (3.09 [lb])

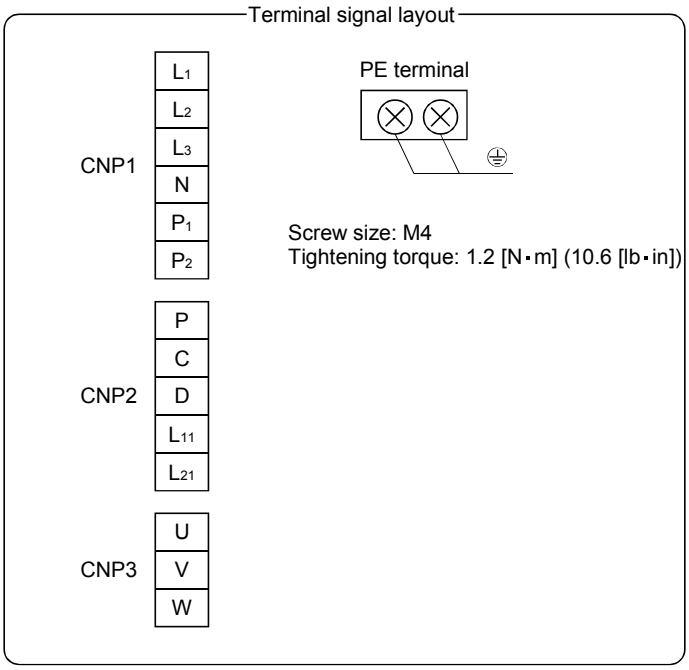

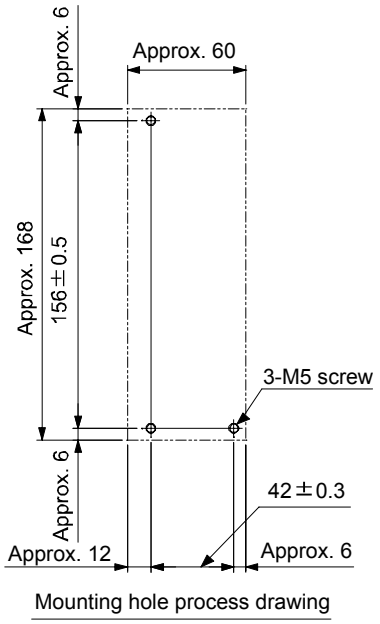

Mounting screw
Screw size: M5
Tightening torque: 3.24 [N・m] (28.7 [lb・in])

(4) MR-J3-200B-RJ004

POINT
・Connectors (CNP1, CNP2, and CNP3) and appearance of MR-J3-200B-RJ004 servo amplifier have been changed from April 2008 production. For existing servo amplifier, refer to appendix 5.

[Unit: mm]

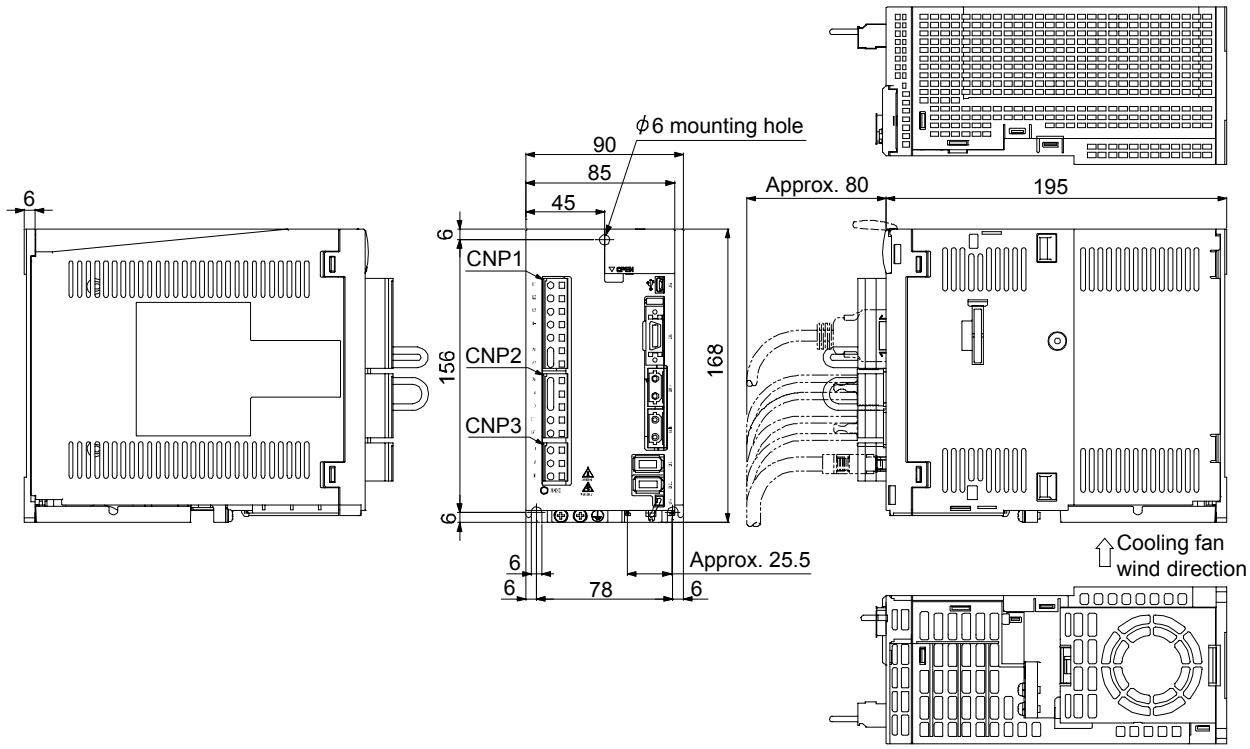

Mass: 2.1 [kg] (4.63 [lb])

Terminal signal layout

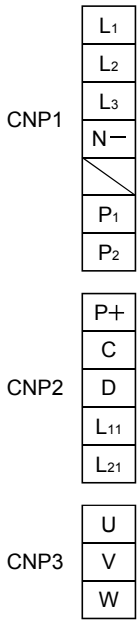

PE terminal

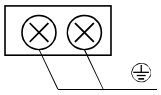

Screw size: M4
Tightening torque: 1.2[N・m]

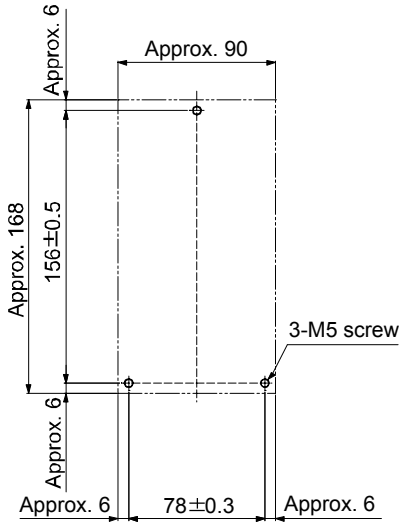

Mounting hole process drawing

Mounting screw
Screw size: M5
Tightening torque: 3.24 [N・m] (28.7 [lb・in])

(5) MR-J3-350B-RJ004

[Unit: mm]

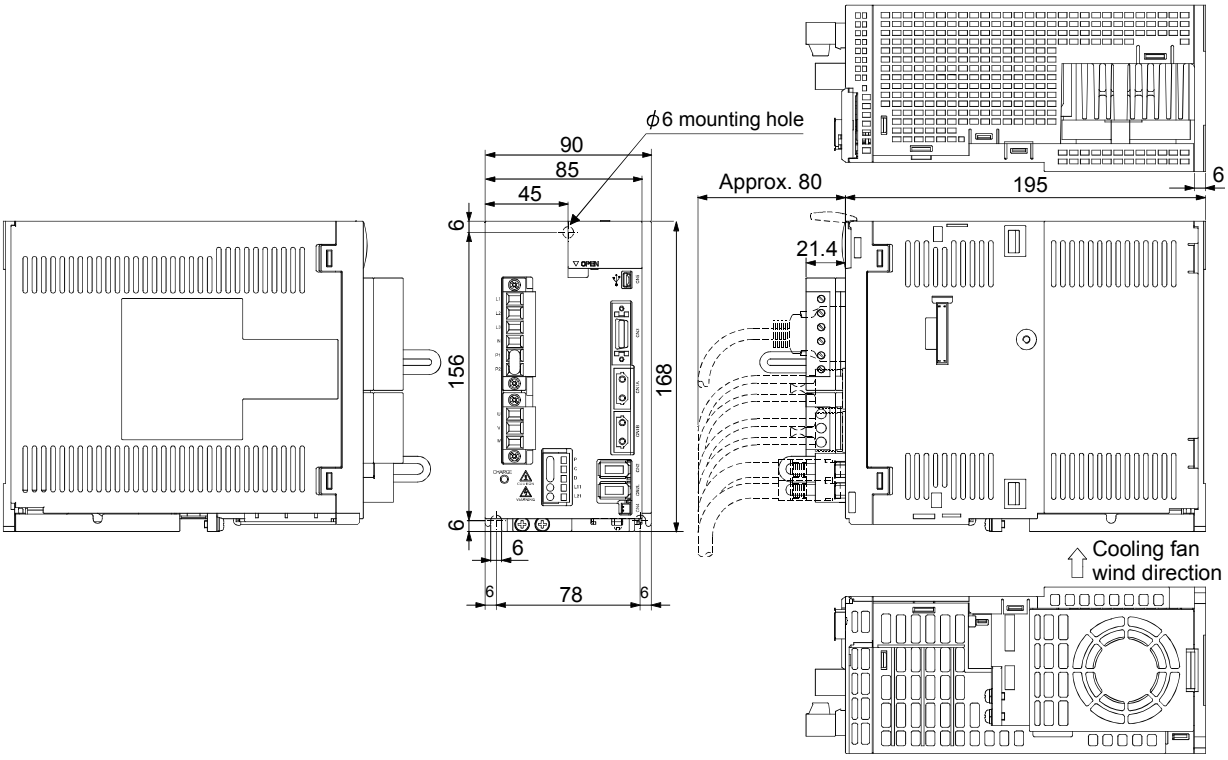

Mass: 2.3 [kg] (5.07 [lb])

Terminal signal layout

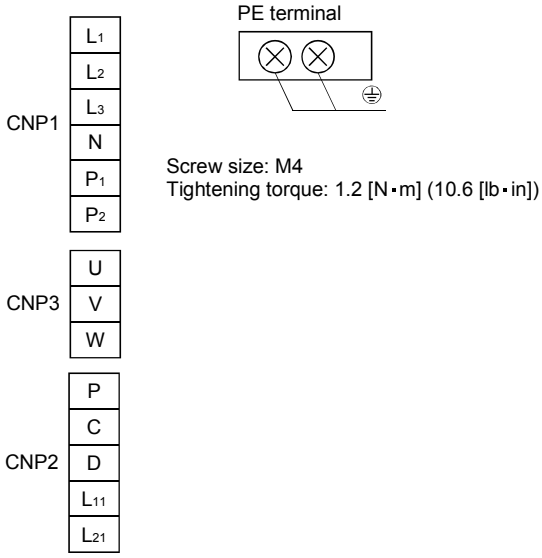

Screw size: M4
Tightening torque: 1.2 [N・m] (10.6 [lb・in])

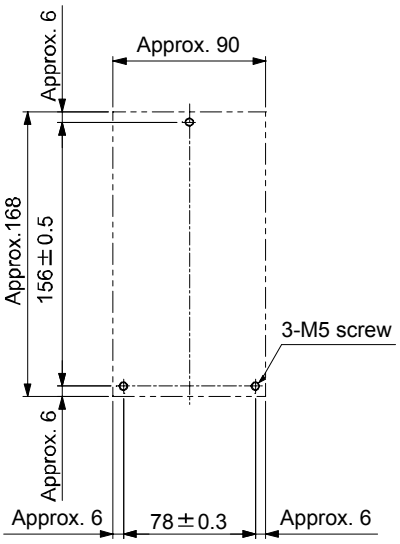

Mounting hole process drawing

Mounting screw
Screw size: M5
Tightening torque: 3.24 [N・m] (28.7 [lb・in])

(6) MR-J3-500B-RJ004

[Unit: mm]

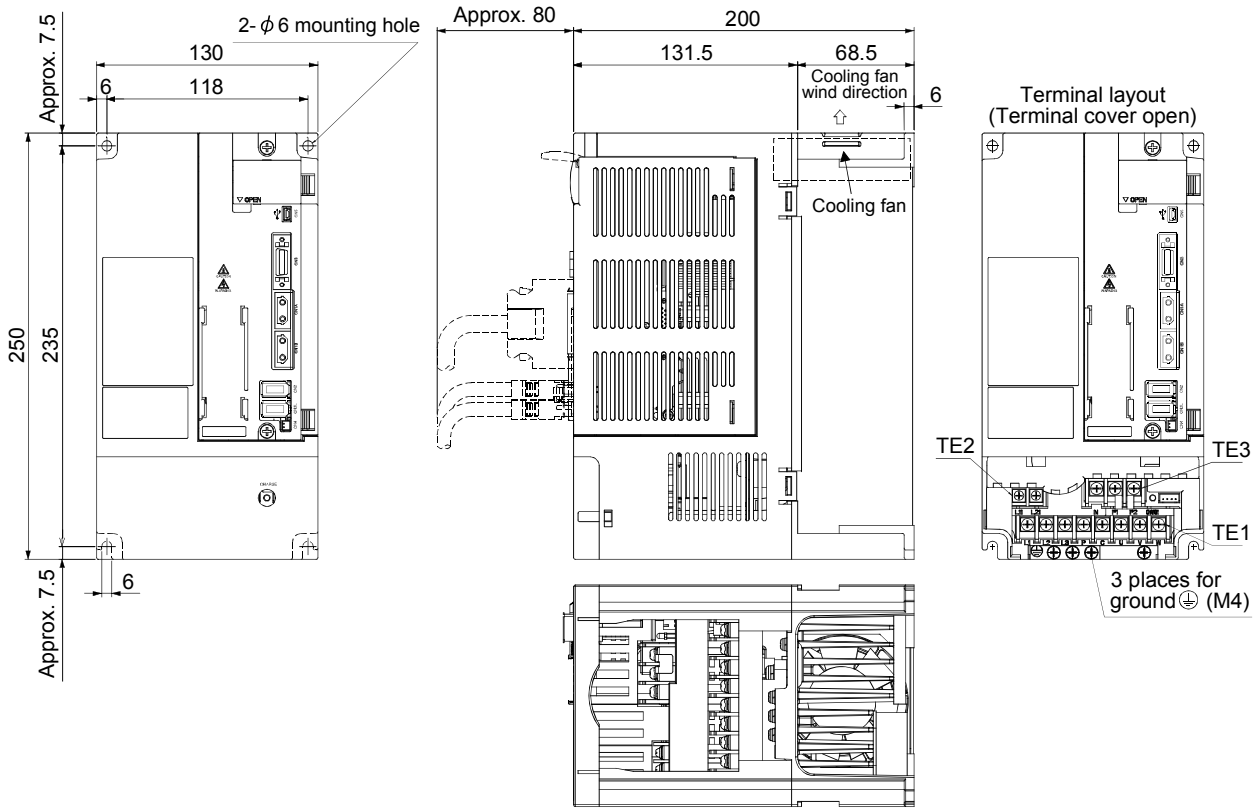

Mass: 4.6 [kg] (10.1 [lb])

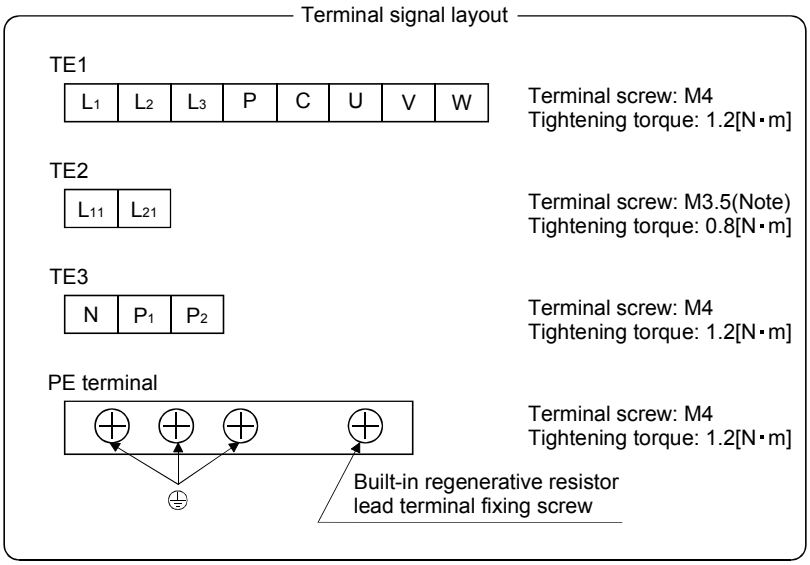

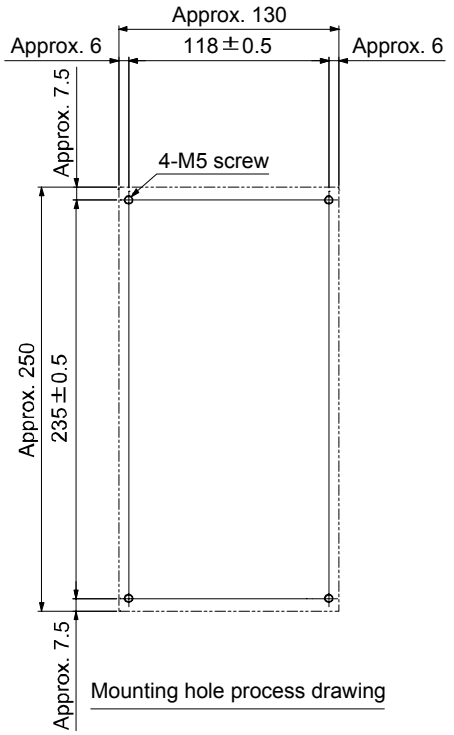

Note. Screw size is M3.5 for the control circuit terminal block (TE2) of the servo amplifier manufactured in April 2007 or later. Screw size is M3 for the control terminal block (TE2) of the servo amplifier manufactured in March 2007 or earlier.

Mounting screw
Screw size: M5
Tightening torque: 3.24 [N・m] (28.7 [lb・in])

(7) MR-J3-700B-RJ004

[Unit: mm]

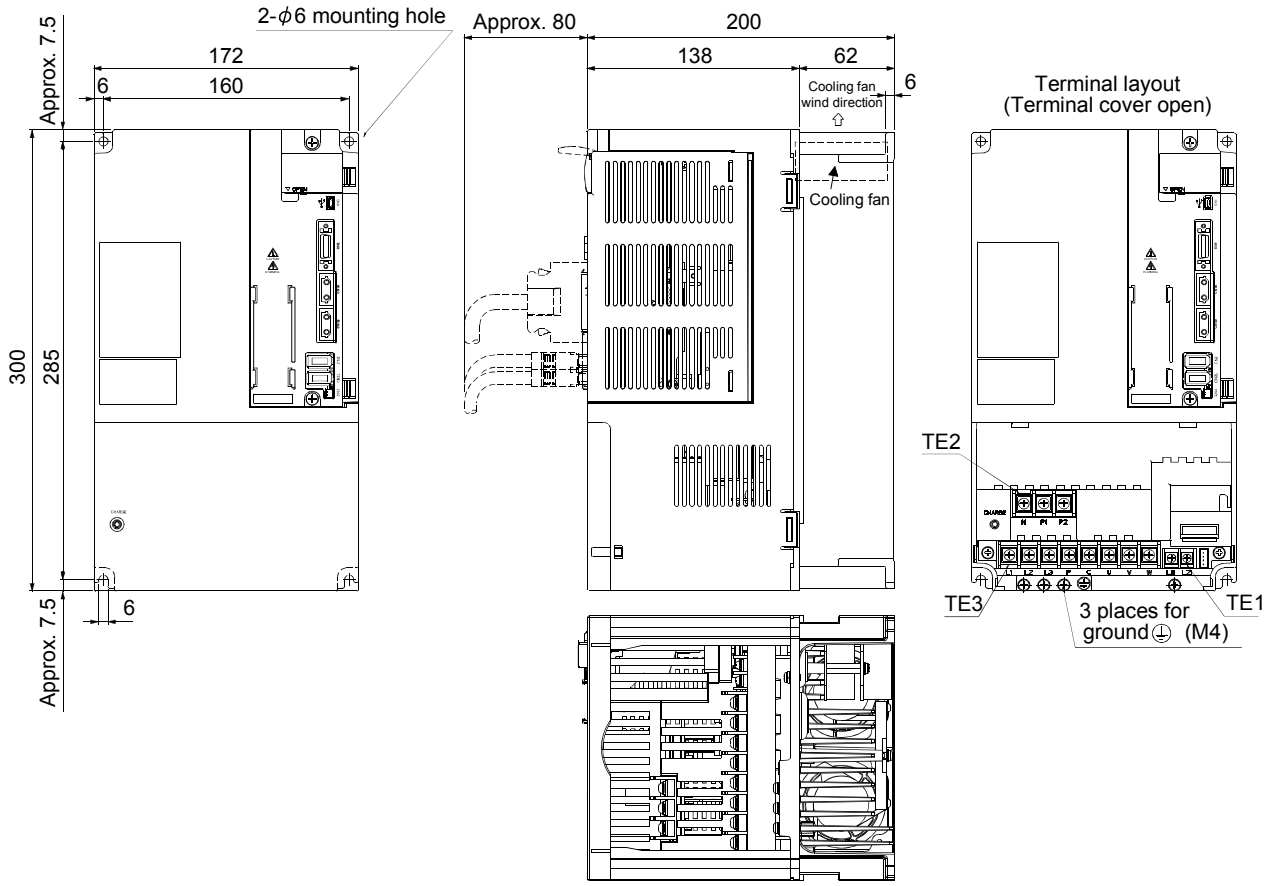

Mass: 6.2 [kg] (13.7[lb])

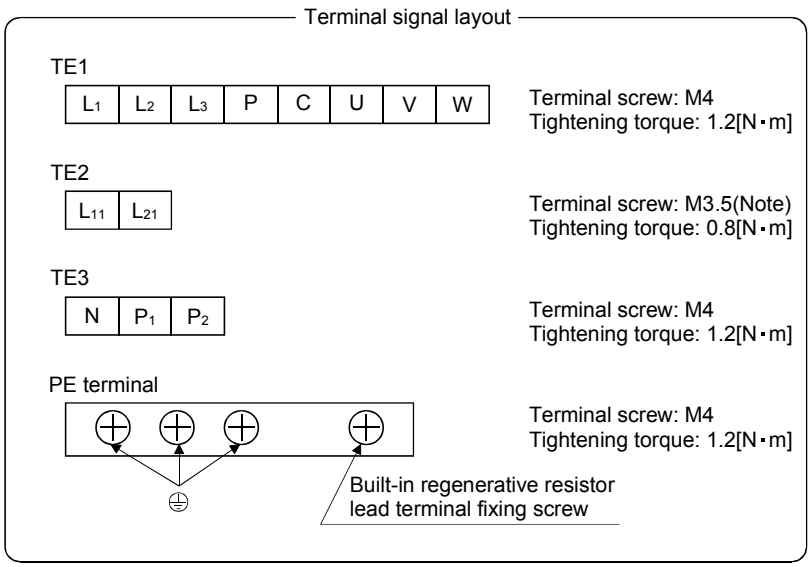

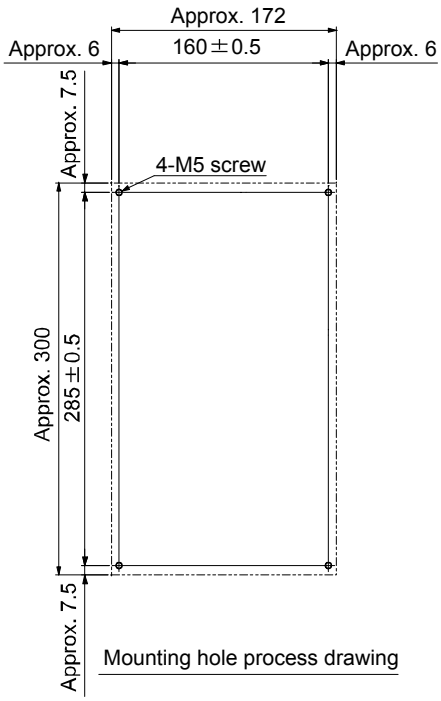

Note. Screw size is M3.5 for the control circuit terminal block (TE2) of the servo amplifier manufactured in April 2007 or later. Screw size is M3 for the control terminal block (TE2) of the servo amplifier manufactured in March 2007 or earlier.

Mounting screw
Screw size: M5
Tightening torque: 3.24 [N・m] (28.7 [lb・in])

(8) MR-J3-11KB-RJ004 ▪ MR-J3-15KB-RJ004 ▪ MR-J3-22KB4-RJ004

[Unit: mm]

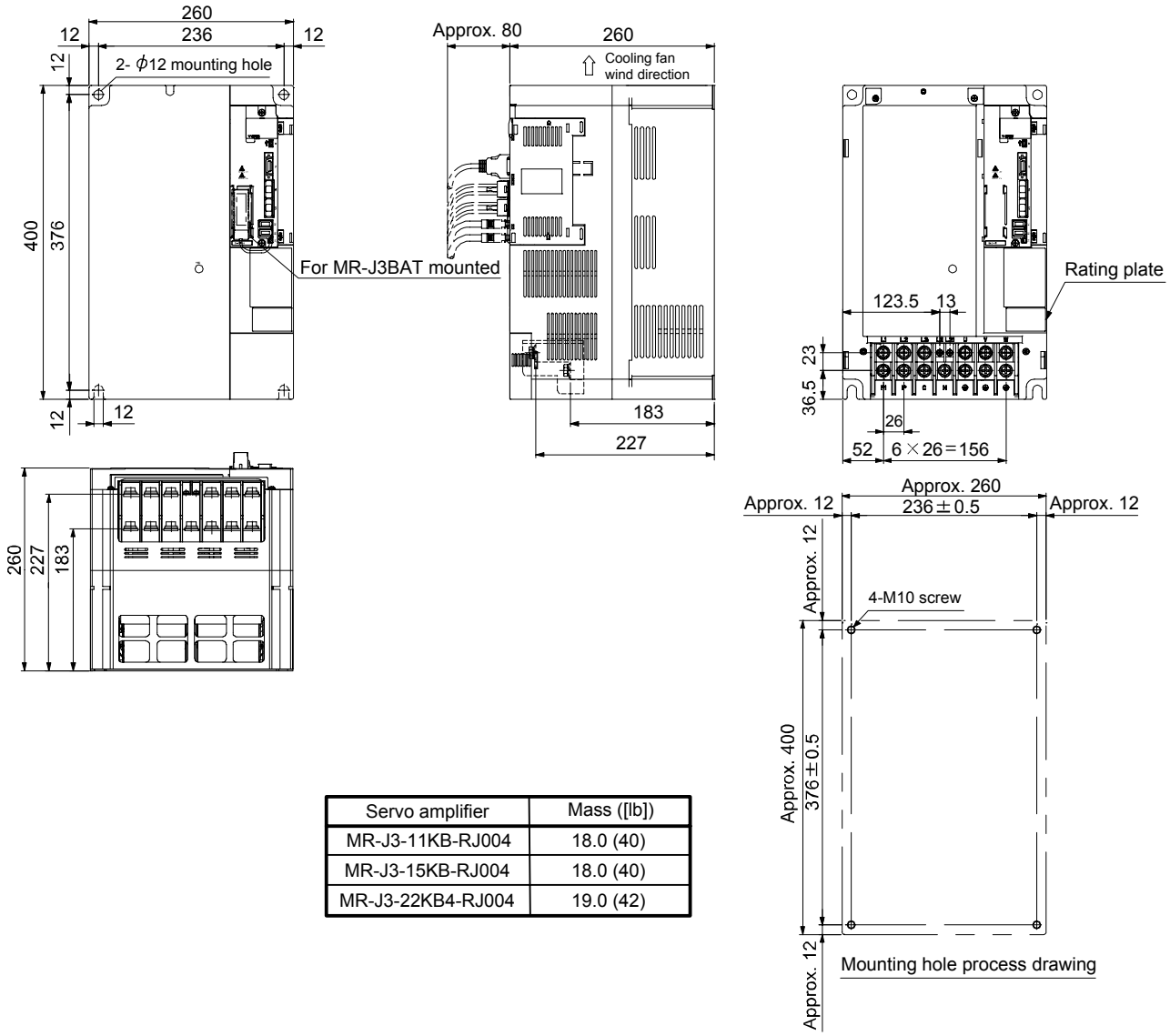

Servo amplifier	Mass ([lb])
MR-J3-11KB-RJ004	18.0 (40)
MR-J3-15KB-RJ004	18.0 (40)
MR-J3-22KB4-RJ004	19.0 (42)

Terminal signal layout

L_1	L_2	L_3	L_{11}	L_{21}	U	V	W
P_1	P	C	N		⏚	⏚	⏚

		L_1 ▪ L_2 ▪ L_3 ▪ U ▪ V ▪ W ▪ P_1 ▪ P ▪ C ▪ N ▪ ⏚	L_{11} ▪ L_{21}
MR-J3-11KB-RJ004 MR-J3-15KB-RJ004	Terminal screw	M6	M4
	Tightening torque [N ▪ m]	3.0	1.2
MR-J3-22KB4-RJ004	Terminal screw	M8	M4
	Tightening torque [N ▪ m]	6.0	1.2

Mounting screw

Servo amplifier	Terminal screw	Tightening torque [N ▪ m] ([lb▪in])
MR-J3-11KB-RJ004 MR-J3-15KB-RJ004 MR-J3-22KB4-RJ004	M10	26.5 (234.5)

9. CHARACTERISTICS

9.1 Overload protection characteristics

An electronic thermal relay is built in the servo amplifier to protect the linear servo motor and servo amplifier from overloads. Overload 1 alarm (50) occurs if overload operation performed is above the electronic thermal relay protection curve shown in any of Figs 10.1. Overload 2 alarm (51) occurs if the maximum current flew continuously for several seconds due to machine collision, etc. Use the equipment on the left-hand side area of the continuous or broken line in the graph.

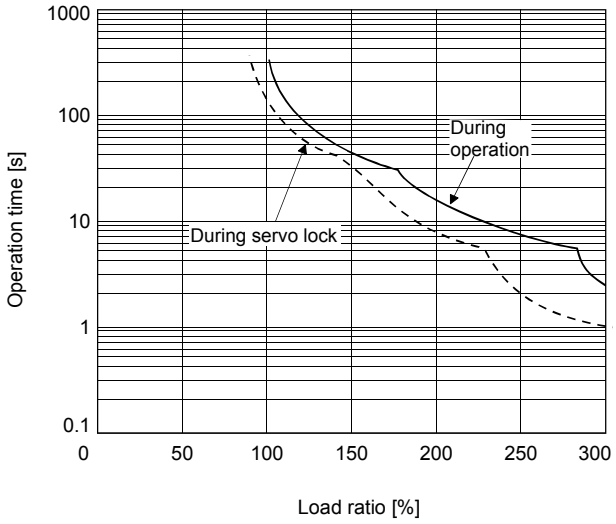

a. LM-H2 series

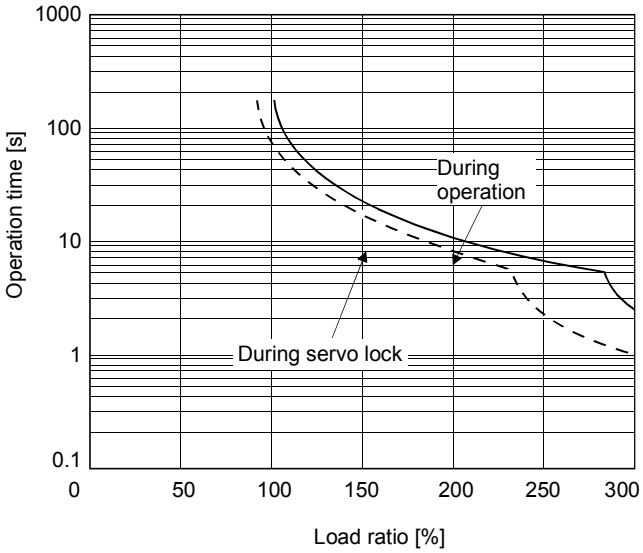

b. LM-U2 series

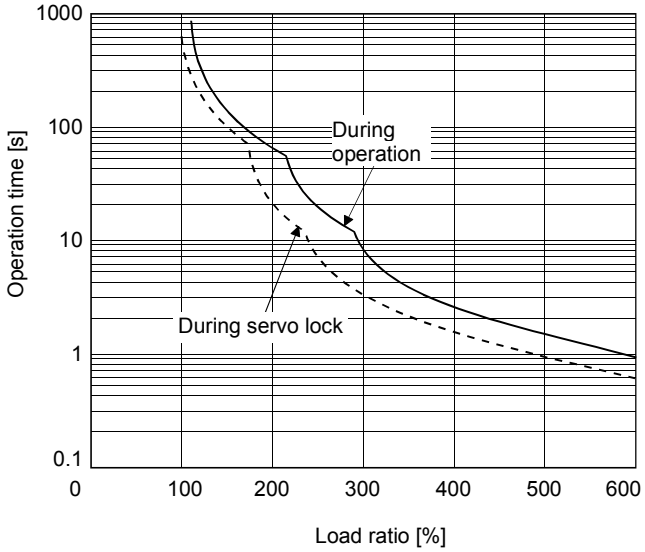

c. LM-F (Self-cooled)

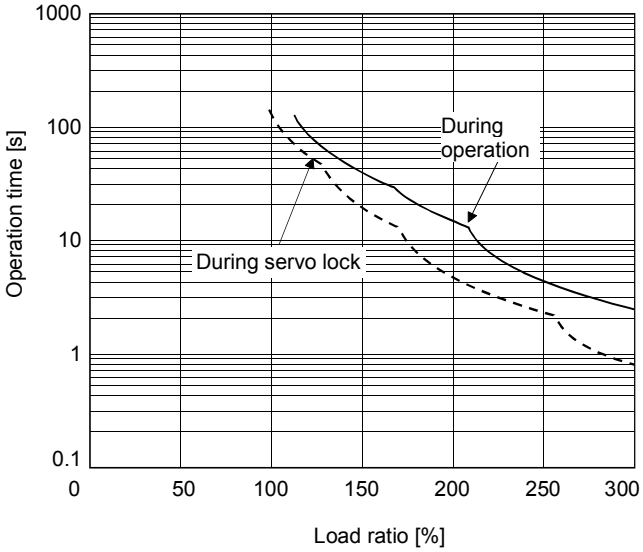

d. LM-F (Liquid-cooled)

Fig 9.1 Electronic thermal relay protection characteristics

9.2 Dynamic brake characteristics

Use the next equation to calculate an approximate coasting distance to a stop when the dynamic brake is operated.

$$Lmax = V_0 \cdot \{0.03 + M \cdot (A + B \cdot V_0^2)\}$$

Lmax : Machine coasting distance [m]
V_0 : Brake time speed [m/s]
M : Movable part total mass [kg]
A : Coefficient (according to the table below)
B : Coefficient (according to the table below)

Linear servo motor	Coefficient A	Coefficient B
LM-H2P1A-06M	2.91×10^{-2}	8.44×10^{-3}
LM-H2P2A-12M	1.01×10^{-2}	5.71×10^{-3}
LM-H2P2B-24M	3.14×10^{-2}	7.26×10^{-4}
LM-H2P2C-36M	1.57×10^{-3}	4.16×10^{-4}
LM-H2P2D-48M	1.28×10^{-3}	3.16×10^{-4}
LM-H2P3A-24M	3.28×10^{-2}	7.59×10^{-4}
LM-H2P3B-48M	1.12×10^{-3}	2.72×10^{-4}
LM-H2P3C-72M	9.05×10^{-4}	1.50×10^{-4}
LM-H2P3D-96M	8.01×10^{-4}	1.20×10^{-4}

Linear servo motor	Coefficient A	Coefficient B
LM-U2PAB-05M-0SS0	5.72×10^{-2}	1.72×10^{-4}
LM-U2PAD-10M-0SS0	2.82×10^{-2}	8.60×10^{-5}
LM-U2PAF-15M-0SS0	1.87×10^{-2}	5.93×10^{-5}
LM-U2PBB-07M-1SS0	3.13×10^{-2}	1.04×10^{-4}
LM-U2PBD-15M-1SSO	1.56×10^{-2}	5.18×10^{-5}
LM-U2PBF-22M-1SS0	4.58×10^{-2}	1.33×10^{-5}
LM-U2P2B-40M-2SS0	1.47×10^{-3}	1.27×10^{-5}
LM-U2P2C-60M-2SS0	1.07×10^{-3}	7.66×10^{-6}
LM-U2P2D-80M-2SS0	9.14×10^{-4}	5.38×10^{-6}

Linear servo motor	Coefficient A	Coefficient B
LM-FP2B-06M-1SS0	8.96×10^{-4}	1.19×10^{-3}
LM-FP2D-12M-1SS0	5.55×10^{-4}	4.81×10^{-4}
LM-FP2F-18M- 1SS0	4.41×10^{-4}	2.69×10^{-4}
LM-FP4B-12M-1SS0	5.02×10^{-4}	4.36×10^{-4}
LM-FP4D-24M-1SS0	3.55×10^{-4}	1.54×10^{-4}
LM-FP4F-36M-1SS0	1.79×10^{-4}	1.36×10^{-4}
LM-FP4H-48M-1SS0	1.15×10^{-4}	1.19×10^{-4}
LM-FP5H-60M-1SS0	1.95×10^{-4}	4.00×10^{-5}

⚠ CAUTION

- The coasting distance is a theoretically calculated value which ignores the running load such as friction. The calculated value is considered to be longer than it really is. However, if a sufficient braking distance is not obtained when some margin is allowed, it may result in crashing into the stroke edge, which is highly dangerous. Install the anti-crash mechanism such as an air brake or an electric/mechanical stopper such as a shock absorber to reduce the shock of movable parts. No linear servo motor with an electromagnetic brake is available.

App. 1 Parameter list

POINT

- Parameter whose symbol is preceded by * is made valid with the following conditions.
  * : Set the parameter value, switch power off once after setting, and then switch it on again, or perform the controller reset.
  **: Set the parameter value, switch power off once, and then switch it on again.

Basic setting parameters (PA□□)		
No.	Symbol	Name
PA01		For manufacturer setting
PA02	**REG	Regenerative option
PA03	*ABS	Absolute position detection system
PA04	*AOP1	Function selection A-1
PA05 to PA07		For manufacturer setting
PA08	ATU	Auto tuning
PA09	RSP	Auto tuning response
PA10	INP	In-position range
PA11 to PA13		For manufacturer setting
PA14	*POL	Moving direction selection
PA15	*ENR	Encoder output pulses
PA16	*ENR2	Encoder output pulses 2
PA17 PA18		For manufacturer setting
PA19	*BLK	Parameter write inhibit

Gain/filter parameters (PB□□)		
No.	Symbol	Name
PB01	FILT	Adaptive tuning mode (Adaptive filter II)
PB02	VRFT	Vibration suppression control filter tuning mode (Advanced vibration suppression control)
PB03		For manufacturer setting
PB04	FFC	Feed forward gain
PB05		For manufacturer setting
PB06	GD2	Load mass ratio to the linear servo motor primary side (coil)
PB07	PG1	Model loop gain
PB08	PG2	Position loop gain
PB09	VG2	Speed loop gain
PB10	VIC	Speed integral compensation
PB11	VDC	Speed differential compensation
PB12		For manufacturer setting
PB13	NH1	Machine resonance suppression filter 1
PB14	NHQ1	Notch form selection 1
PB15	NH2	Machine resonance suppression filter 2
PB16	NHQ2	Notch form selection 2
PB17		Automatic setting parameter
PB18	LPF	Low-pass filter
PB19	VRF1	Vibration suppression control vibration frequency setting
PB20	VRF2	Vibration suppression control resonance frequency setting
PB21 PB22		For manufacturer setting
PB23	VFBF	Low-pass filter selection
PB24	*MVS	Slight vibration suppression control selection
PB25		For manufacturer setting
PB26	*CDP	Gain changing selection
PB27	CDL	Gain changing condition
PB28	CDT	Gain changing time constant
PB29	GD2B	Gain changing-load mass ratio to the linear servo motor primary side (coil)
PB30	PG2B	Gain changing position loop gain
PB31	VG2B	Gain changing speed loop gain
PB32	VICB	Gain changing speed integral compensation
PB33	VRF1B	Gain changing vibration suppression control vibration frequency setting
PB34	VRF2B	Gain changing vibration suppression control resonance frequency setting
PB35 to PB45		For manufacturer setting

Extension setting parameters (PC□□)		
No.	Symbol	Name
PC01	*ERZ	Error excessive alarm level
PC02	MBR	Electromagnetic brake sequence output
PC03	*ENRS	Encoder output pulses selection
PC04	**COP1	Function selection C-1
PC05	**COP2	Function selection C-2
PC06		For manufacturer setting
PC07	ZSP	Zero speed
PC08		For manufacturer setting
PC09	MOD1	Analog monitor output 1
PC10	MOD2	Analog monitor output 2
PC11	MO1	Analog monitor 1 offset
PC12	MO2	Analog monitor 2 offset
PC13 to PC16		For manufacturer setting
PC17	**COP4	Function selection C-4
PC18 to PC20		For manufacturer setting
PC21	*BPS	Alarm history clear
PC22 to PC25		For manufacturer setting
PC26	**COP8	Function selection C-8
PC27	**COP9	Function selection C-9
PC28 to PC32		For manufacturer setting

Extension setting parameters (PS□□)		
No.	Symbol	Name
PS01	*LIT1	Linear function selection 1
PS02	**LIM	Linear encoder resolution setting Numerator
PS03	**LID	Linear encoder resolution setting Denominator
PS04	*LIT2	Linear function selection 2
PS05	LB1	Linear servo motor control position deviation error detection level
PS06	LB2	Linear servo motor control speed deviation error detection level
PS07	LB3	Linear servo motor control thrust deviation error detection level
PS08	*LIT3	Linear function selection 3
PS09	LPWM	Magnetic pole detection voltage level
PS10	LFH	At magnetic pole detection current detection method Identification signal frequency
PS11	LIDH	At magnetic pole detection current detection method Identification signal amplitude
PS12 to PS32		For manufacturer setting

I/O setting parameters (PD□□)		
No.	Symbol	Name
PD01		For manufacturer setting
PD02	*DIA2	Input signal automatic ON selection
PD03 to PD06		For manufacturer setting
PD07	*D01	Output signal device selection 1(CN3-pin 13)
PD08	*D02	Output signal device selection 2(CN3-pin 9)
PD09	*D03	Output signal device selection 3(CN3-pin 15)
PD10 to PD13		For manufacturer setting
PD14	*D0P3	Function selection D-3
PD15 to PD32		For manufacturer setting

App. 2 Signal layout recording paper

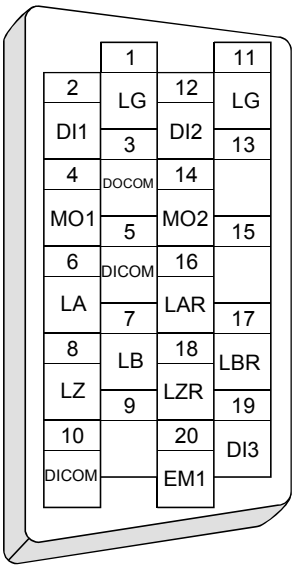

App. 3 Capacity selection of linear servo motor

App. 3.1 Selection of linear servo motor

Select a linear servo motor according to the purpose of the machine for which it is installed. When the machine on which a linear servo motor is installed is not compatible with the motor, the performance of the linear servo motor cannot be fully got out of and furthermore it becomes difficult to perform the gain adjustment. Select a linear servo motor correctly with the full understanding of the characteristics of the linear servo motor with reference to this section.

(1) Maximum feed speed

Maximum feed speed of the linear servo motor of each series is 2m/s. Note, however, that 2m/s cannot be reached depending on the selected linear encoder.

(2) Selection of the primary side (coil) (Logical value)

The linear servo motor has the output area (maximum thrust) that can be used only for a short time such as acceleration/deceleration aside from the continuous thrust and that can provide about triple thrust of the rated.

Calculate the continuous effective load thrust and the necessary maximum thrust from all data of the machine and the operation pattern, and select a linear servo motor applicable to those results. The following indicates the selection example for the operation pattern of line acceleration/deceleration.

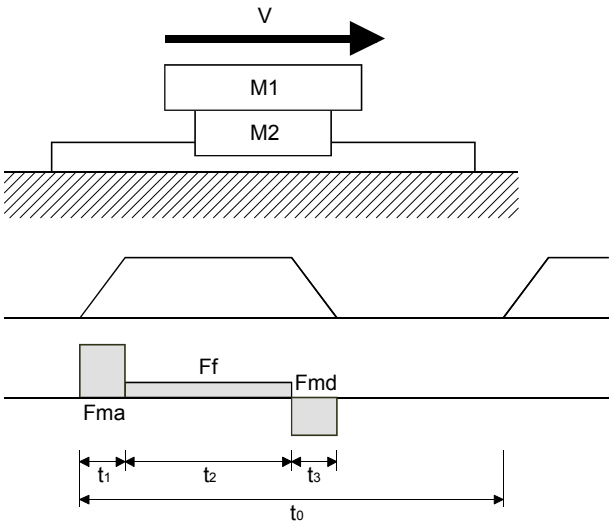

V : Feed speed [m/s]
M1 : Load mass [kg]
M2 : Weight on linear servo motor primary side
Fma : Acceleration time thrust [N]
Ff : Load power [N]
(Including friction, imbalance, cable bear)
Fmd : Deceleration time thrust [N]
t_1 : A1cceleration time [s]
t_2 : Constant speed time [s]
t_3 : Deceleration time [s]
t_0 : 1 cycle time [s]
a : Acceleration and deceleration time acceleration speed [m/s^2]
η : Efficiency of mechanical system
μ : Coefficient of friction

1) Temporary selection

Select temporarily the linear servo motor which mass ratios of the linear servo motor primary side (coil) and the load become less than the recommended load mass ratio (refer to the specification list of each linear servo motor).

Recommended load mass ratio ≧ M1/M2

2) Calculation of load power

$M = M1 + M2$ [kg]
$Ff = \mu \cdot (M \cdot 9.8 + \text{Magnetic suction})$ [N] (Counting only friction)

3) Calculation of acceleration time and deceleration time thrust

$Fma = M \cdot a + Ff$ [N]
$Fmd = -M \cdot a + Ff$ [N]

4) Calculation of continuous effective load thrust

$$Frms = \sqrt{(Fma^2 \cdot t_1 + Ff^2 \cdot t_2 + Fmd^2 \cdot t_3) / t_0} \text{ [N]}$$

5) Determination of linear servo motor selected.

Frms/ $\eta \leq$ REM Continuous thrust [N] of temporarily selected motor
Frms/ $\eta \leq$ REM Max. thrust [N] of temporarily selected motor

When the above equation is not satisfied after determination, increase the capacity of linear servo motor by one and calculate again.

(3) Number selection of secondary side (magnets)
Select number of the secondary side (magnets) by the combination with which the following equation is satisfied.

(Total length of which secondary side (magnet) are set out) ≧ (Max. feed distance)+(Length of primary side (coil))

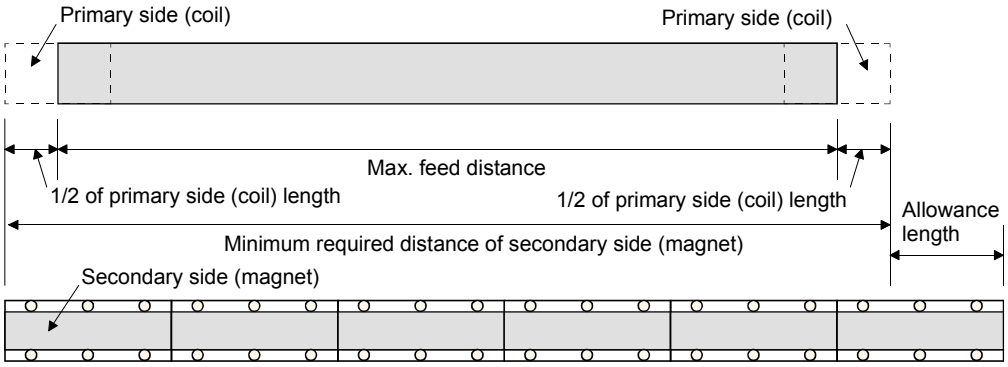

(4) Selection of regenerative option

The following table shows the energy that can be absorbed in the capacitor within the servo amplifier and the inverse efficiency of the linear servo motor.

Servo amplifier MR-J3-□-RJ004	Capacitor charge [%]	Inverse efficiency [J]	Regenerative power [W]							
			Built-in regenerative resistor	MR-RB032 [40Ω]	MR-RB12 [40Ω]	MR-RB30 [13Ω]	MR-RB31 [6.7Ω]	MR-RB32 [40Ω]	(Note 1) MR-RB50 [13Ω]	(Note 1) MR-RB51 [6.7Ω]
10B	55	9		30						
20B	70	9	10	30	100					
40B	85	11	10	30	100					
60B	85	11	10	30	100					
70B	80	18	20	30	100			300		
100B	80	18	20	30	100			300		
200B	85	40	100			300			500	
350B	85	40	100			300			500	
500B	90	45	130				300			500
700B	90	70	170				300			500

Servo amplifier MR-J3-□-RJ004	Capacitor charge [%]	Inverse efficiency [J]	(Note 2) Regenerative power [W]			
			External regenerative resistor (Accessory)	MR-RB5E [6Ω]	MR-RB9P [4.5Ω]	MR-RB6K-4 [10Ω]
11KB	90	120	500(800)	500(800)		
15KB	90	170	850(1300)		850(1300)	
22KB4	90	250	850(1300)			850(1300)

Note 1. Always install a cooling fan.
2. Values in parentheses assume the installation of a cooling fan.

The energy used by the regenerative resistor can be calculated by subtracting losses from the deceleration time thrust which has been calculated to select the linear servo motor.

$$\text{Regenerative energy P (W)} = (-\text{Fmd} \cdot t_3 \cdot (\text{Speed}/2) \cdot (\text{Inverse efficiency}/100) - \text{Capacitor charging})/t_0$$

Select the regenerative option as necessary so that the used energy becomes less than the regenerative power.

App. 3.2 Selection example including regenerative

Mechanical conditions	
Load mass	: 20 kg
Feed speed	: 2m/s
Efficiency of mechanical system η	: 0.9
Feed distance	: 1600 mm
Friction μ	: 0.01
Feed time	: 1s
1cycle time	: 2s

(1) Temporary selection and calculation of load power

When the operation pattern is decided by setting the acceleration time as t1 = 0.2s, the constant speed time will be t2 = 0.6s.

Acceleration: $a = 2\ [m/s] / 0.2\ [s] = 10\ [m/s^2]$

Select temporarily the linear servo motor LM-H2P2B-24M, which mass ratio is 9.6 times when the load mass is 20kg.

Mass	: 2.5 kg
Magnetic suction	: 1900N
Continuous thrust	: 240N
Maximum thrust	: 600N

(2) Calculation of acceleration time and deceleration time thrust (Counting only friction)

$Ff = \mu \cdot (M \cdot 9.8 + 1900) = 0.01 \times \{(20+2.5) \times 9.8 + 1900\} = 21.2\ [N]$

$Fma = M \cdot a + Ff = (20 + 2.5) \times 10m/s^2 + 21.2 = 246.2\ [N]$

$Fmd = -M \cdot a + Ff = -(20 + 2.5) \times 10m/s^2 + 21.2 = -203.8\ [N]$

(3) Calculation of continuous effective load thrust

$$Frms = \sqrt{(Fma^2 \cdot t_1 + Ff^2 \cdot t_2 + Fmd^2 \cdot t_3) / to}$$

$$= \sqrt{(246.2^2 \times 0.2 + 21.2^2 \times 0.6 + (-203.8)^2 \times 0.2) / 2} = 101.7\ [N]$$

$Frms/\eta = 101.7/0.9 = 113\ [N]$

As a result of this, the continuous thrust is less than 240N, and therefore the linear servo motor is available.

$Frms/\eta = 246.2/0.9 = 273.6\ [N]$

As a result of this, the maximum thrust is less than 600N, and therefore the linear servo motor is available.

(4) Number of secondary side (magnets)

(Max. feed distance) + (Length of primary side (coil)) = 1600 + 224 = 1824 [mm]

As a result of this, the total length of the secondary side (magnet) that is set out needs 1824mm or more. For example, one of the following examples can be selected.

(a) Four LM-H2S20-480-1SS0 magnets (Total of 1920mm)

(b) Five LM-H2S20-384-1SS0 magnets (Total of 1920mm)

(c) Seven LM-H2S20-288-1SS0 magnets (Total of 2016mm)

(d) Two LM-H2S20-768-1SS0 and one LM-H2S20-288 magnets (Total of 1824mm)

(5) Calculation of regenerative energy

$$P[W] = \{-Fmd \cdot t_3 \cdot (Speed/2) \cdot (Inverse\ effeiciency/100) - Capacitor\ charging\}/t_0$$

$$= \{203.8 \times 0.2 \times (2/2) \times (80/100) - 11\}/2 = 10.8\ [W]$$

(Use MR-J3-70B-RJ004U502 for the servo amplifier.)
As the regenerative energy does not exceed the regenerative power (20W), the regenerative option is not required.

Selection result	
Linear servo amplifier	: MR-J3-70B-RJ004U502
Linear servo motor	
Primary side (coil)	: LM-H2P2B-24M-1SS0
Secondary side (magnet)	: LM-H2S20-480-1SS0 (Four magnets)
Regenerative option	: Not required

App. 4 Change of connector sets to the RoHS compatible products

The following connector sets have been changed to RoHS compliant since September 2006.
RoHS compliant and non-RoHS compliant connector sets may be mixed based on availability.
Only the components of the connector set that have changed are listed below.

Model	Current product	RoHS compatible product
MR-J3SCNS	Servo amplifier connector (3M or equivalent of 3M)	Servo amplifier connector (3M or equivalent of 3M)
MR-ECNM	36210-0100JL (Receptacle) (Note)	36210-0100PL (Receptacle)

Note. RoHS compatible 36210-0100FD may be packed with current connector sets.

App. 5 MR-J3-200B-RJ004 servo amplifiers manufactured before March 2008

Connectors (CNP1, CNP2, and CNP3) and appearance of MR-J3-200B-RJ004 servo amplifier have been changed from April 2008 production. The difference between new MR-J3-200B-RJ004 servo amplifier and existing servo amplifier is described in this appendix. Sections within parentheses in the following sections indicate corresponding sections of the instruction manual.

App. 5.1 Parts identification (1.6 Parts identification)

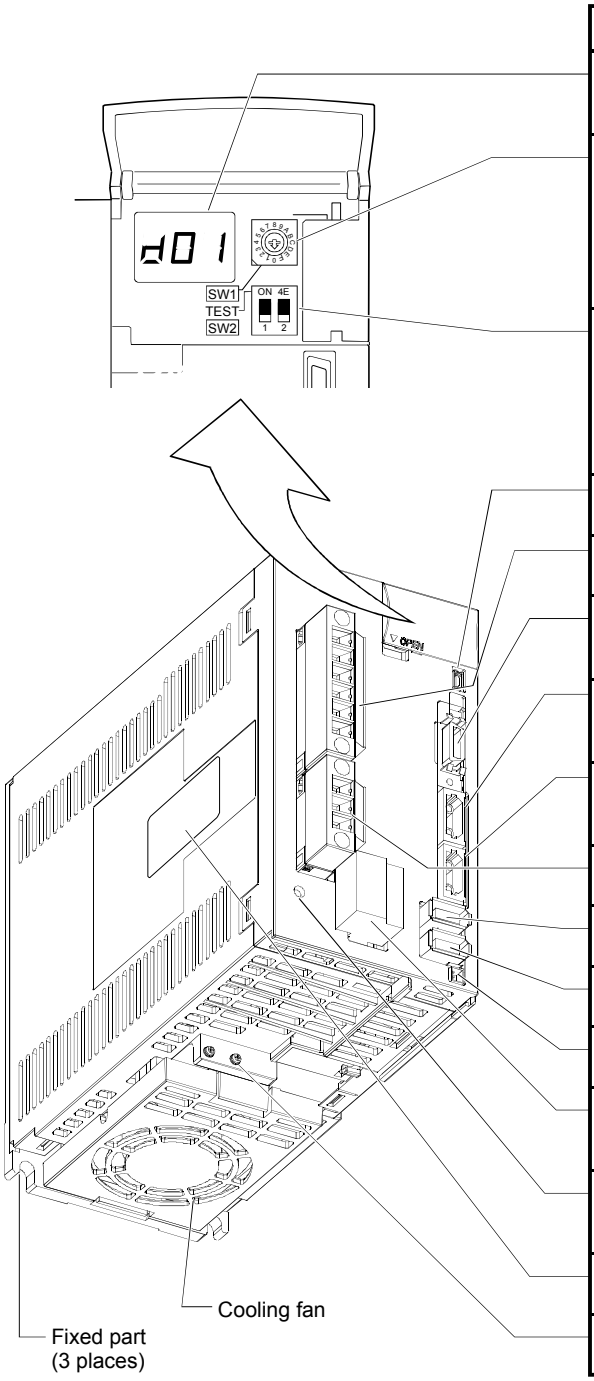

Name/Application	Detailed explanation
Display The 3-digit, seven-segment LED shows the servo status and alarm number.	Refer to the MR-J3-□B Servo Amplifier Instruction Manual.
Rotary axis setting switch (SW1) SW1 Used to set the axis No. of servo amplifier.	
Test operation select switch (SW2-1) SW2 Used to perform the test operation mode by using MR Configurator. Spare (Be sure to set to the "Down" position).	
USB communication connector (CN5) Used to connect the personal computer.	
Main circuit power supply connector (CNP1) Used to connect the input power supply.	Section 4.2
I/O signal connector (CN3) Used to connect digital I/O signals. More over an analog monitor is output.	Section 4.3
SSCNETⅢ cable connector (CN1A) Used to connect the servo system controller or the front axis servo amplifier.	Refer to the MR-J3-□B Servo Amplifier Instruction Manual.
SSCNETⅢ cable connector (CN1B) Used to connect the rear axis servo amplifier. For the final axis, puts a cap.	
Servo motor power supply connector (CNP3) Used to connect the servo motor.	Chapter 2 Section 4.2
Connector for thermistor (CN2) Used to connect the thermistor of the linear servo motor.	Chapter 2
Encoder connector (CN2L) Used to connect the linear encoder.	Chapter 3
Connector for manufacturer setting (CN4) Not used for this servo amplifier.	
Control circuit connector (CNP2) Connect the control circuit power supply/regenerative option.	Section 4.2
Charge lamp Lit to indicate that the main circuit is charged. While this lamp is lit, do not reconnect the cables.	
Rating plate	Section 1.4
Protective earth (PE) terminal (⏚) Ground terminal.	Section 4.2

App. 5.2 Configuration including auxiliary equipment (1.7 Configuration including auxiliary equipment)

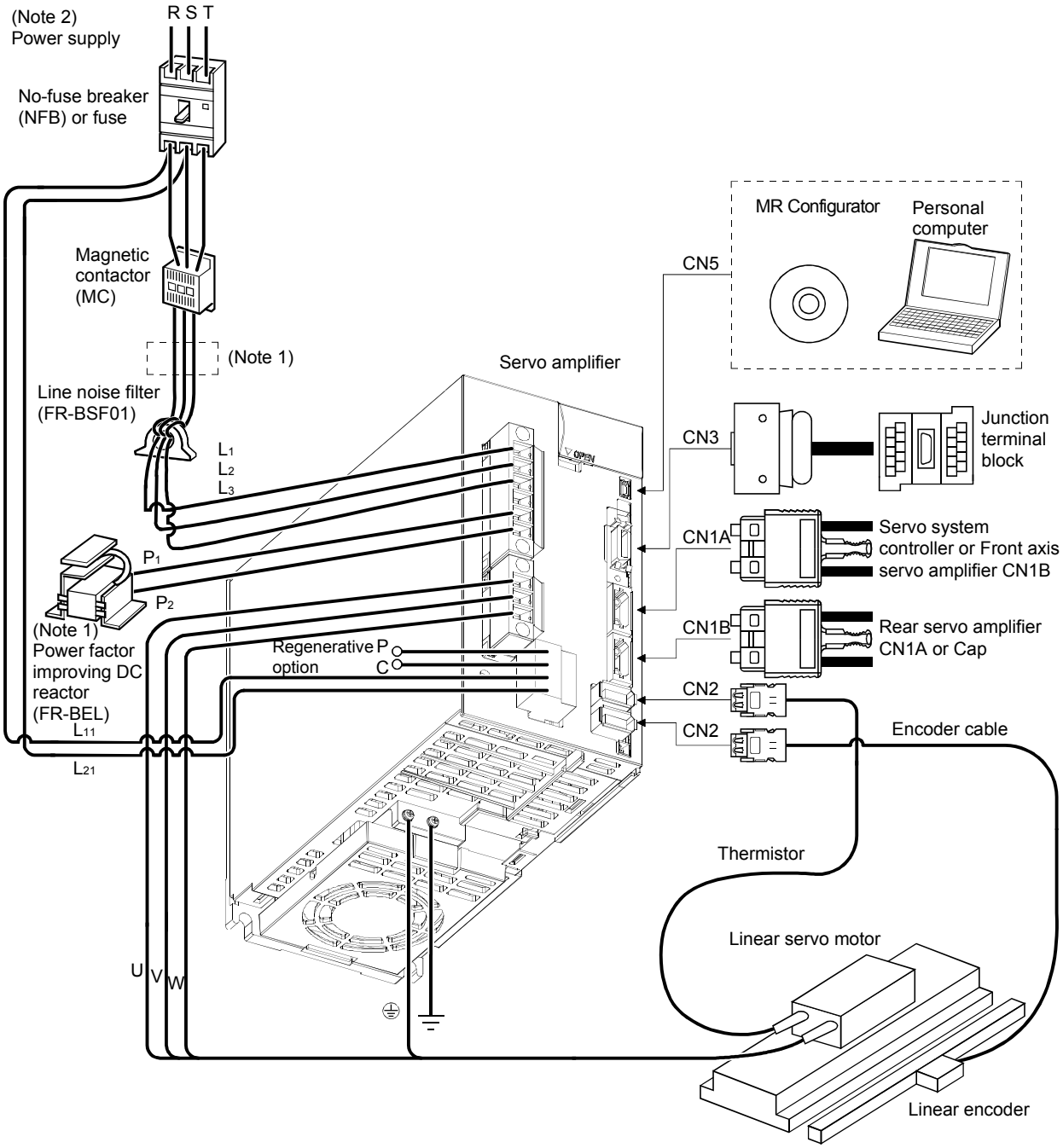

Note 1. The AC reactor can also be used. In this case, the DC reactor cannot be used. When not using DC reactor, short P_1 and P_2.
2. Refer to section 1.2 for the power supply specification.

App. 5.3 SERVO AMPLIFIER OUTLINE DRAWINGS
(Chapter 8 SERVO AMPLIFIER OUTLINE DRAWINGS)

[Unit: mm]

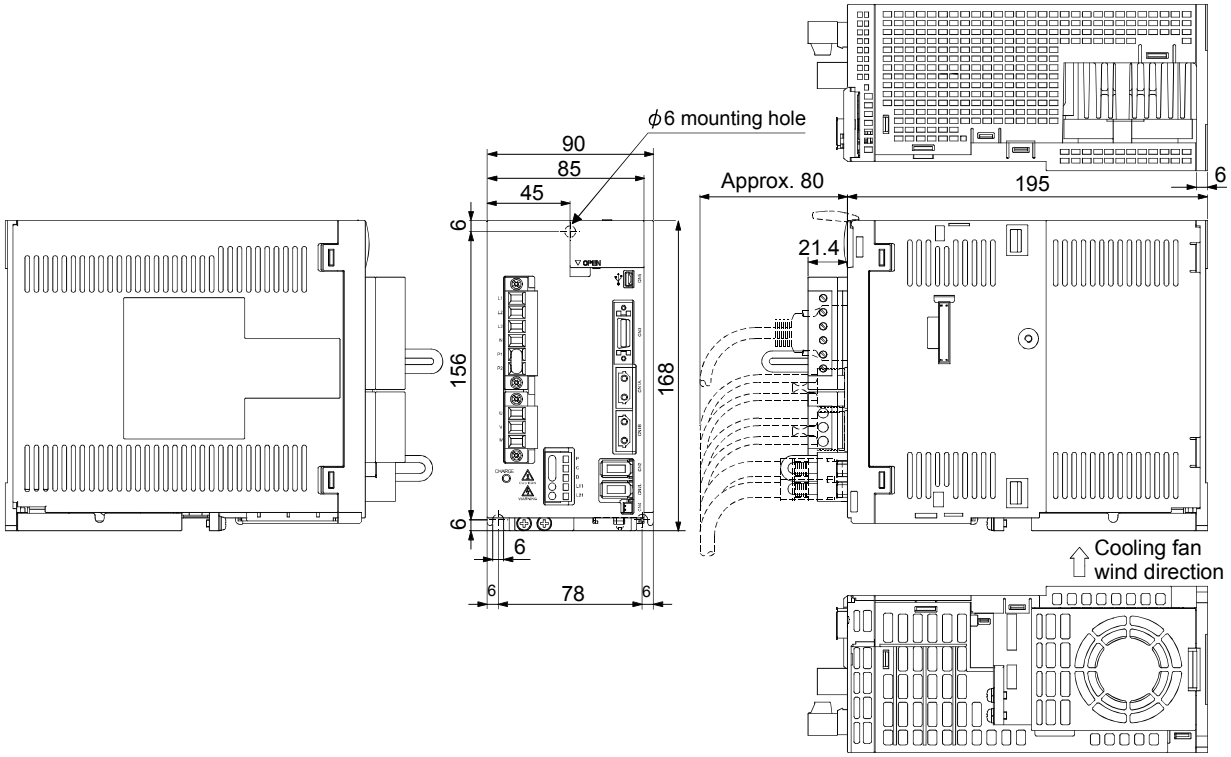

Mass: 2.3 [kg] (5.07 [lb])

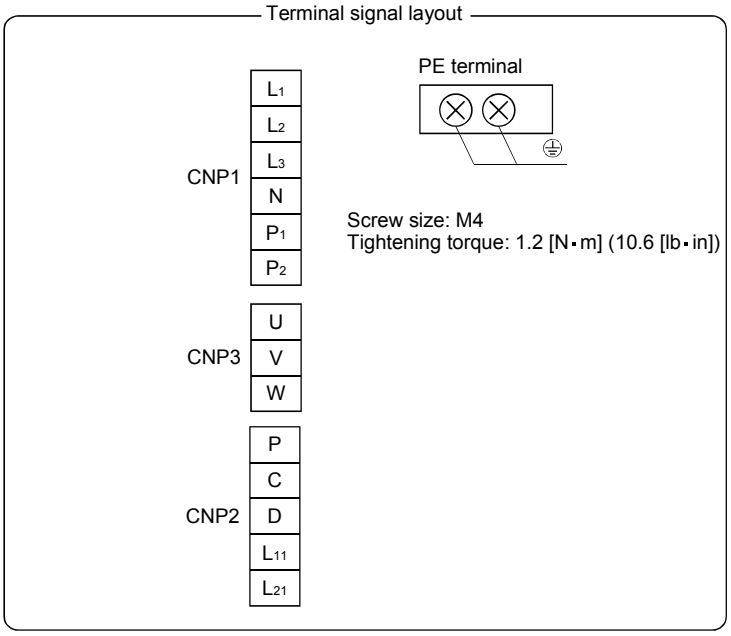

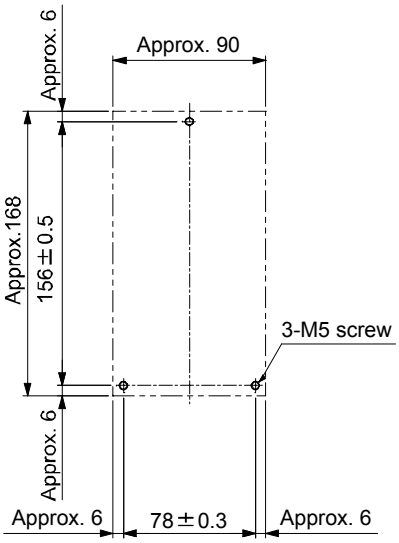

Mounting hole process drawing

Mounting screw
Screw size: M5
Tightening torque: 3.24 [N・m] (28.7 [lb・in])

REVISIONS

*The manual number is given on the bottom left of the back cover.

Print Data	*Manual Number	Revision
May, 2006	SH(NA)030054-A	First edition
Feb., 2008	SH(NA)030054-B	Linear servo motor addition LM-U2 series Primary side (Coil) LM-U2PAB-05M-0SS0, LM-U2PAD-10M-0SS0, LM-U2PAF-15M-0SS0 LM-U2PBB-07M-1SS0, LM-U2PBD-15M-1SS0, LM-U2PBF-22M-1SS0 Secondary side (Magnet) LM-U2SA0-240-0SS0, LM-U2SA0-300-0SS0, LM-U2SA0-420-0SS0 LM-U2SB0-240-1SS0, LM-U2SB0-300-1SS0, LM-U2SB0-420-1SS0 LM-F series Primary side (Coil) LM-FP2B-06M-1SS0, LM-FP2D-12M-1SS0, LM-FP2F-18M-1SS0 LM-FP4B-12M-1SS0, LM-FP4D-24M-1SS0, LM-FP4F-36M-1SS0 LM-FP4H-48M-1SS0, LM-FP5H-60M-1SS0 Secondary side (Magnet) LM-FS20-480-1SS0, LM-FS20-576-1SS0 LM-FS40-480-1SS0, LM-FS40-576-1SS0 LM-FS50-480-1SS0, LM-FS50-576-1SS0 Servo amplifier capacity 100W, 200W, 60W, 750W, 11kW, 15kW, 22kW added Safety Instructions 1. To prevent electric shock — Partial change of sentence 2. To prevent fire — Partial change of sentence 4. Additional Instructions (1) Transportation and installation — Partial change of sentence (2) Wiring — Sentence is added Section 1.2 — Servo amplifier capacity added The power supply of main and control circuit under 750W was single-phrase 230V Section 1.4 — Servo amplifier capacity added 400V class model code definition added Section 1.5 — LM-U2 thrust added, LM-F added Section 1.6 — Servo amplifier capacity added Section 1.7 — Servo amplifier capacity added Section 2.2 — Warning: Change of sentence Section 2.3.1 — Change of sentence Section 2.3.2 — Change of sentence Section 2.5.3 — The single-phrase voltage for the character of thrust changed to 200V Section 2.5.4 (1) — Note 1 changed Section 2.5.5 (1) — Drawing changed Section 2.5.6 (1) — Sentences in CAUTION changed Section 2.6.1 — LM-U2 thrust added Section 2.6.2 — LM-U2 thrust added Section 2.6.4 — LM-U2 thrust added

Print Data	*Manual Number	Revision	
Feb., 2008	SH(NA)030054-B	Section 2.6.5 (1)	LM-U2 thrust added LM-U2P2B-40M-2SS0, LM-U2P2C-60M-2SS0, LM-U2P2D-80M-2SS0 changed
		Section 2.6.5 (2)	LM-U2 thrust added
		Section 2.7	LM-U2 addition
		Section 3.1	ST743A produced by Mitutoyo Corporation added LC192M produced by The Optronics Co., Ltd.added
		Section 3.2.1 (1)	ST743A addition
		Section 3.2.1 (3)(a)	AT343A partly added
		Section 3.2.1 (3)(c)	ST743A added
		Section 3.2.1 (4)(c)	ST743A added Software unit for signal adjustment added
		Section 3.2.2 (1)(a)	LC192M added Output cable added
		Section 3.2.2 (1)(b)	Encoder cable added
		Section 3.2.2 (3)(b)	LC192M added
		Section 3.2.2 (4)(a)	LC192M added
		Section 3.2.3 (4)	POINT addition
		Section 3.3 (3)(b) 2)	POINT addition
		Chapter 4	Sentences in Warning changed Addition of CAUTION sentence
		Section 4.2	Sentences in CAUTION changed Table 4.1 wires added Table 4.2 changed Capacity in wiring diagram added
		Section 5.2.2 (1)(b)	LM-U2 thrust, LM-F in Note 2 added
		Section 5.3.1 (3)	Delete
		Section 6.6.2	Setting range in parameter No.PS10 changed
		Section 7.4	Error cause of ST741A/ST743A produced by Mitutoyo Corporation added
		Chapter 8	Servo amplifier capacity added
		Section 9.1	LM-U2 changed. LOM-F(Self-cooled) added LM-F (Liquid-cooled) added
		App. 4.1 (4)	Capacity added
May, 2008	SH(NA)030054-C	(2) Wiring	“Otherwise, the linear servo motor does not operate properly” changed to “Not doing so may cause unexpected operation” in clause of connection of servo amplifier and linear servo motor
		About the wires used for wiring	Criterion of selecting temperature listed
		Section 1.2	Mass of MR-J3-200B-RJ004 changed from “2.3” to “2.1”
		Section 1.6 (2)	Case of MR-J3-200B-RJ004 changed
		Section 1.6 (3) to (6)	MR-J3-200B-RJ004 deleted from section 1.6 (2), “(2) to (5)” changed to “(3) to (6)”
		Section 1.7 (2)	Case of MR-J3-200B-RJ004 changed
		Section 1.7 (3) to (6)	MR-J3-200B-RJ004 deleted from section 1.7 (2), “(2) to (5)” changed to “(3) to (6)”
		Section 4.2	Description partly deleted, Table 4.1 and 4.2 deleted
		Section 4.2.1	Selection example of wires added
		Section 4.2.2	Section 4.2 (1) to (5) merged into “Section 4.2.2 Connection example”

Print Data	*Manual Number	Revision	
May, 2008	SH(NA)030054-C	Section 4.3	Connection example for upper stroke limit (FLS) and lower stroke limit (RLS) changed to “Normally-closed contact” Description of Note 15 changed as bellow From “The following devices can be assigned for Q172HCPU • Q173HCPU •QD75MH.” to “The assigned devices are for the Q173DCPU, Q172DCPU, Q173HCPU, Q172HCPU, and QD75MH□.”
		Chapter 8 (4)	Case-changed MR-J3-200B-RJ004 added
		Chapter 8 (5) to (8)	MR-J3-200B-RJ004 deleted from chapter 8 (4), “(5) to (7)” changed to “(6) to (8)”
		App. 5	“MR-J3-200B-RJ004 servo amplifiers manufactured before March 2008” added

MODEL	LINEAR SERVO INSTRUCTION
MODEL CODE	1CW943

MITSUBISHI ELECTRIC CORPORATION

HEAD OFFICE : TOKYO BLDG MARUNOUCHI TOKYO 100-8310

SH (NA) 030054-C (0805) MEE Printed in Japan