MITSUBISHI

PROGRAMMABLE CONTROLLER

MELSEC-A

Mitsubishi General Use PC User's Manual

K/A Conversion Adaptor (Hardware)

Thank you for buying the Mitsubishi General Use PC MELSEC-A Series.
Before use, please read this manual carefully and correctly operate the module with a sufficient understanding of the A series PC functions and performance.
Please place this manual in a location where it is available to end users.

MODEL	A6K/A-HENKAN-U-E
MODEL CODE	13JL34

MITSUBISHI ELECTRIC
IB (NA)-66802-B (9711) MEE

● SAFETY PRECAUTIONS ●

(Read these precautions before using.)

When using Mitsubishi equipment, thoroughly read this manual and the associated manuals introduced in the manual. Also pay careful attention to safety and handle the module properly.
These precautions apply only to Mitsubishi equipment. Refer to the CPU module user's manual for a description of the PC system safety precautions.
These ● SAFETY PRECAUTIONS ● classify the safety precautions into two categories: "DANGER" and "CAUTION".

⚠DANGER	**Procedures which may lead to a dangerous condition and cause death or serious injury if not carried out properly.**
⚠CAUTION	**Procedures which may lead to a dangerous condition and cause superficial to medium injury, or physical damage only, if not carried out properly.**

Depending on circumstances, procedures indicated by ⚠**CAUTION** may also be linked to serious results.
In any case, it is important to follow the directions for usage.
Store this manual in a safe place so that you can take it out and read it whenever necessary. Always forward it to the end user.

[INSTALLATION PRECAUTIONS]

⚠CAUTION

- Use the conversion adaptor in an environment that meets the general specifications contained in the CPU module user's manual.
  Using this conversion adaptor in an environment outside the range of the general specifications could result in electric shock, fire, malfunction, and damage to or deterioration of the product.
- Do not directly touch the conversion adaptor's conductive parts.
  Doing so could cause malfunction or failure in the system.
- Securely tighten the conversion adaptor with installation screws with the specified torque.
  The conversion adaptor may fall out and cause breakdowns.

[WIRING PRECAUTIONS]

⚠DANGER

- Make sure to switch all phases of the external power supply off before beginning wiring and installation work. If you do not switch off the external power supply, it will cause electric shock, or damage to the module.
- When turning on the power or operating the module after installation or wiring work, be sure the module's terminal covers of the K-series terminal block are correctly closed. Failure to close the terminal covers may result in electric shock

⚠CAUTION

- When wiring the conversion adaptor, check the rated voltage and terminal layout of the wiring, and make sure the wiring is done correctly. Connecting a power supply that differs from the rated voltage or wiring it incorrectly may cause fire or failure.
- Securely tighten the terminal screws, K-series terminal block installation screws and K-series connector installation screws with the specified torque.
  If the screws are loose, it may result in short circuits, fire or malfunction. Tightening the screws too far may cause damage to the screw and/or the conversion adaptor, resulting in fallout, short circuits, or malfunction.
- Be sure there are no foreign substances such as sawdust or wiring debris inside the module.

[STARTING AND MAINTENANCE PRECAUTIONS]

⚠DANGER

- Do not touch the terminals and connectors while power is on. Doing so may cause electric shock or malfunction.
- Make sure to switch all phases of the external power supply off before cleaning or retightening terminal screws. If you do not switch off the external power supply, it will cause electric shock.
  Tightening the screws too far may cause damages to the screws and/or the conversion adaptor resulting in fallout, short circuits, or malfunction.

⚠CAUTION

- Do not disassemble or modify the conversion adaptor.
  Doing so could cause failure, malfunction, injury, or fire.
- The conversion adaptor case is made of resin. Do not drop the case or apply strong shock to it.
  Doing so may damage the conversion adaptor.

[DISPOSAL PRECAUTIONS]

⚠CAUTION

- When disposing of this product, treat it as industrial waste.

Revisions

* The manual number is noted at the lower left of the back cover.

Print Date	*Manual Number	Revision
Aug. 1997	IB (NA)-66802-A	First printing
Nov. 1997	IB (NA)-66802-B	Correction Chapter 2, Section 3.11, 3.12

Table of Contents

About This Manual

The following are manuals related to this product.
Request for the manuals as needed according to the chart below.

Related Manuals

Manual Name	Manual No. (Model Code)
Building Block Type I/O Module User's Manual	IB-66140 (13J643)

1. OVERVIEW

1.1 Overview

This manual describes about the K/A conversion adaptor. The K/A conversion adaptor converts the different pin assignments between the MELSEC-K series and the MELSEC-A series.

1.2 Features

(1) Time required for replacing the K-series with the A-series has been dramatically reduced.
The terminal block and connector of the MELSEC-K I/O module can be connected to the MELSEC-A I/O module without changing the wire arrangement. In addition, it requires no special tools, so the connection can be made quickly.

(2) Integration with the A-series
The appearance is integrated with the MELSEC-A series. Not only that, but the general specifications, integrity and security of the MELSEC-A series are still the same with the adaptor.

(3) Easy installation onto the A-series
The K/A conversion adaptor facilitates easy connection and disconnection, since it is shared with the terminal block and the connector installation area to the A-series, and thus no extra part is required.

1.3 Installation Example

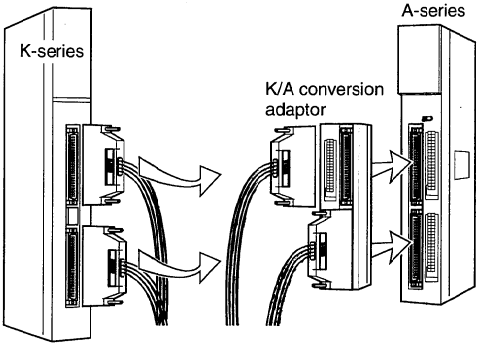

2. K/A CONVERSION ADAPTOR SPECIFICATIONS

Model	Corresponding K-series module	Type	Connection points	Corresponding A-series module	Weight (Kg (lb))
A6KA-TX10	KX10, KX10N	K-series terminal block (20 points) ↓ A-series terminal block (20 points)	16 points	AX10	0.18 (0.40)
A6KA-TX20	KX20, KX20N			AX20	0.18 (0. 40)
A6KA-TX40	KX40, KX40N			AX40	0.18 (0. 40)
A6KA-TY10	KY10, KY10N			AY10	0.18 (0. 40)
A6KA-TY11	KY11, KY11N			AY11	0.18 (0. 40)
A6KA-TY22	KY22, KY22N			AY22	0.18 (0. 40)
A6KA-TY40	KY40, KY40N			AY40	0.18 (0. 40)
A6KA-TX11	KX11N	K-series terminal block (40 points) ↓ A-series terminal block (38 points)	32 points	AX11	0.18 (0. 40)
A6KA-TX21	KX21N			AX21	0.18 (0. 40)
A6KA-TX41	KX41N			AX41	0.18 (0. 40)
A6KA-TY13	KY13N			AY13	0.18 (0. 40)
A6KA-TY23	KY23N			AY23	0.18 (0. 40)
A6KA-TY41	KY41N			AY41	0.18 (0. 40)
A6KA-TY51	KY51N			AY51	0.18 (0. 40)
A6KA-CX42	KX42N	K-series connector (2 units) ↓ A-series connector (2 units)	64 points	AX42	0.10 (0.22)
A6KA-CY42	KY42N			AY42	0.10 (0.22)
A6KA-CH32	KH32			AH42	0.10 (0.22)

General specification

For the general specification, refer to the general specification described in the Building Block Type I/O Module User's Manual to be used.

3. CONNECTION FIGURE

3.1 A6KA-TX10, A6KA-TX20 Connection Figure

Adaptor name	K-series module name	Number of connection	A-series module name
A6KA-TX10	KX10/KX10N	16 points	AX10
A6KA-TX20	KX20/KX20N	16 points	AX20

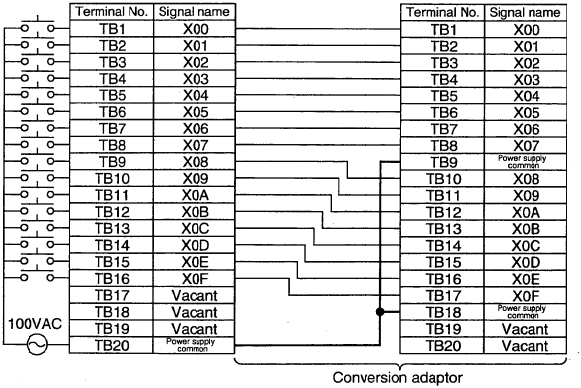

3.2 A6KA-TX40 Connection Figure

Adaptor name	K-series module name	Number of connection	A-series module name
A6KA-TX40	KX40/KX40N	16 points	AX40

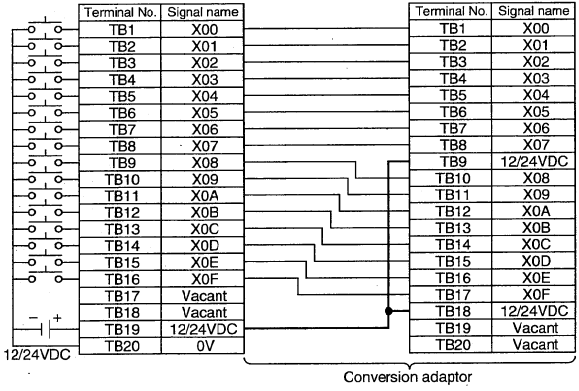

3.3 A6KA-TY10, A6KA-TY11 Connection Figure (Refer to Section 5.3 Restricted Matters for Using)

Adaptor name	K-series module name	Number of connection	A-series module name
A6KA-TY10	KY10/KY10N	16 points	AY10
A6KA-TY11	KY11/KY11N	16 points	AY11

(Use the same power supply for the power supply commons 1 and 2, and for 3 and 4 on the K-series side, since they are internally connected.)

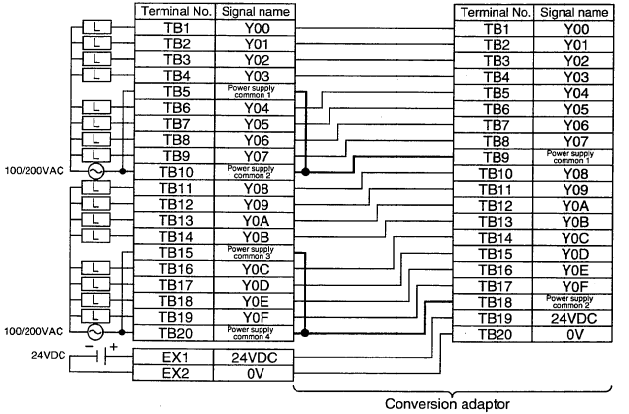

3.4 A6KA-TY22 Connection Figure

Adaptor name	K-series module name	Number of connection	A-series module name
A6KA-TY22	KY22/KY22N	16 points	AY22

(Use the same power supply for the power supply commons 1 and 2, and for 3 and 4 on the K-series side, since they are internally connected.)

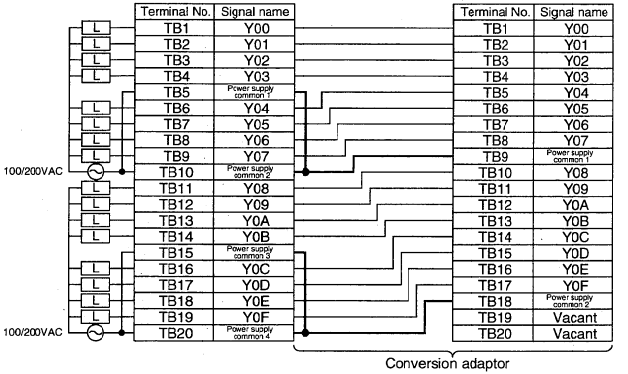

3.5 A6KA-TY40 Connection Figure

Adaptor name	K-series module name	Number of connection	A-series module name
A6KA-TY40	KY40/KY40N	16 points	AY40

(Use the same power supply for the terminal number TB10 and TB20 on the A-series side, since they are internally connected.)

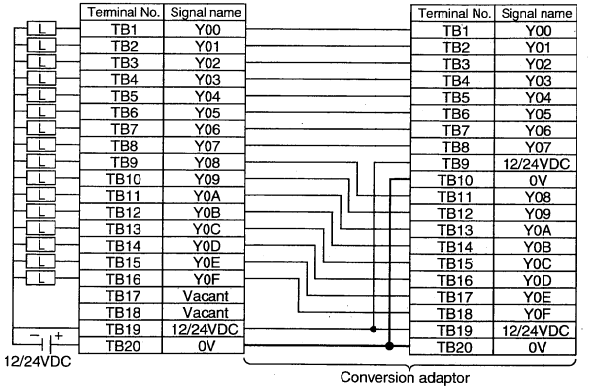

Terminal No.	Signal name
TB1	Y00
TB2	Y01
TB3	Y02
TB4	Y03
TB5	Y04
TB6	Y05
TB7	Y06
TB8	Y07
TB9	Y08
TB10	Y09
TB11	Y0A
TB12	Y0B
TB13	Y0C
TB14	Y0D
TB15	Y0E
TB16	Y0F
TB17	Vacant
TB18	Vacant
TB19	12/24VDC
TB20	0V

Terminal No.	Signal name
TB1	Y00
TB2	Y01
TB3	Y02
TB4	Y03
TB5	Y04
TB6	Y05
TB7	Y06
TB8	Y07
TB9	12/24VDC
TB10	0V
TB11	Y08
TB12	Y09
TB13	Y0A
TB14	Y0B
TB15	Y0C
TB16	Y0D
TB17	Y0E
TB18	Y0F
TB19	12/24VDC
TB20	0V

3.6 A6KA-TX11, A6KA-TX21 Connection Figure

Adaptor name	K-series module name	Number of connection	A-series module name
A6KA-TX11	KX11N	32 points	AX11
A6KA-TX21	KX21N	32 points	AX21

(Use the same power supply for the terminal number TB9, TB18, TB27 and TB36 on the A-series side, since they are internally connected.)

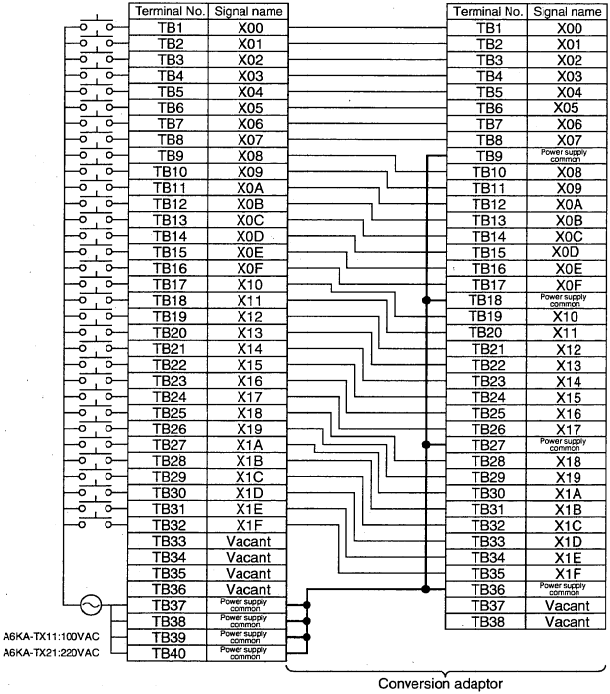

3.7 A6KA-TX41 Connection Figure

Adaptor name	K-series module name	Number of connection	A-series module name
A6KA-TX41	KX41N	32 points	AX41

(Use the same power supply for the terminal number TB9 and TB18, and for TB27 and TB36 on the A-series side, since they are internally connected.)

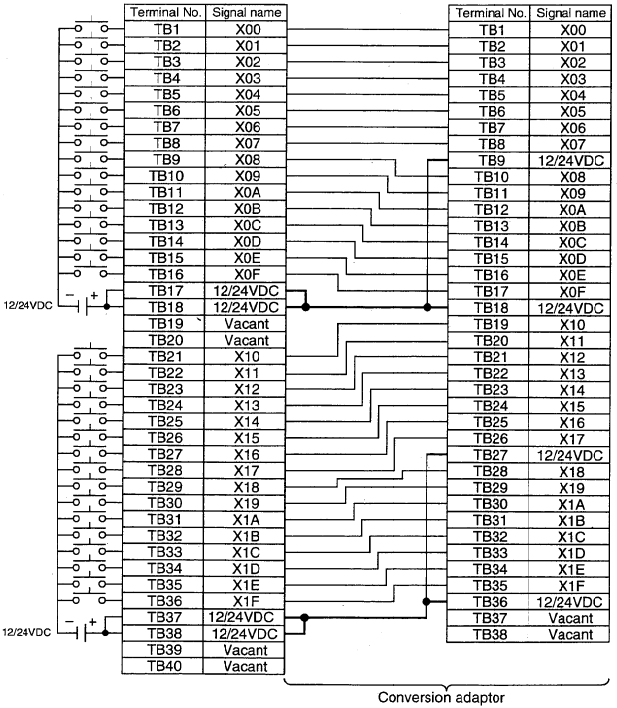

Terminal No.	Signal name
TB1	X00
TB2	X01
TB3	X02
TB4	X03
TB5	X04
TB6	X05
TB7	X06
TB8	X07
TB9	X08
TB10	X09
TB11	X0A
TB12	X0B
TB13	X0C
TB14	X0D
TB15	X0E
TB16	X0F
TB17	12/24VDC
TB18	12/24VDC
TB19	Vacant
TB20	Vacant
TB21	X10
TB22	X11
TB23	X12
TB24	X13
TB25	X14
TB26	X15
TB27	X16
TB28	X17
TB29	X18
TB30	X19
TB31	X1A
TB32	X1B
TB33	X1C
TB34	X1D
TB35	X1E
TB36	X1F
TB37	12/24VDC
TB38	12/24VDC
TB39	Vacant
TB40	Vacant

Terminal No.	Signal name
TB1	X00
TB2	X01
TB3	X02
TB4	X03
TB5	X04
TB6	X05
TB7	X06
TB8	X07
TB9	12/24VDC
TB10	X08
TB11	X09
TB12	X0A
TB13	X0B
TB14	X0C
TB15	X0D
TB16	X0E
TB17	X0F
TB18	12/24VDC
TB19	X10
TB20	X11
TB21	X12
TB22	X13
TB23	X14
TB24	X15
TB25	X16
TB26	X17
TB27	12/24VDC
TB28	X18
TB29	X19
TB30	X1A
TB31	X1B
TB32	X1C
TB33	X1D
TB34	X1E
TB35	X1F
TB36	12/24VDC
TB37	Vacant
TB38	Vacant

3.8 A6KA-TY13 Connection Figure (Refer to Section 5.3 Restricted Matters for Using)

Adaptor name	K-series module name	Number of connection	A-series module name
A6KA-TY13	KY13N	32 points	AY13

(Use the same power supply for the commons 1 and 2, for 3 and 4, for 5 and 6, and for 7 and 8 on the K-series side, since they are internally connected.)

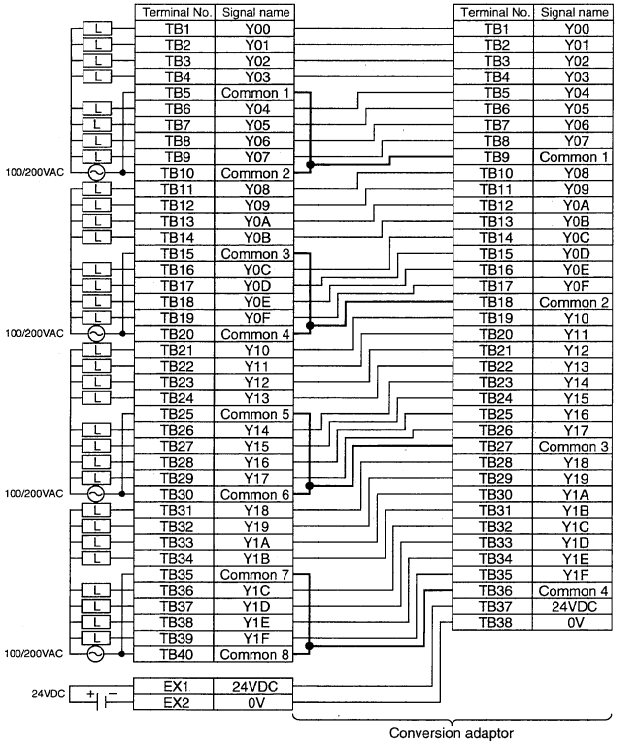

3.9 A6KA-TY23 Connection Figure

Adaptor name	K-series module name	Number of connection	A-series module name
A6KA-TY23	KY23N	32 points	AY23

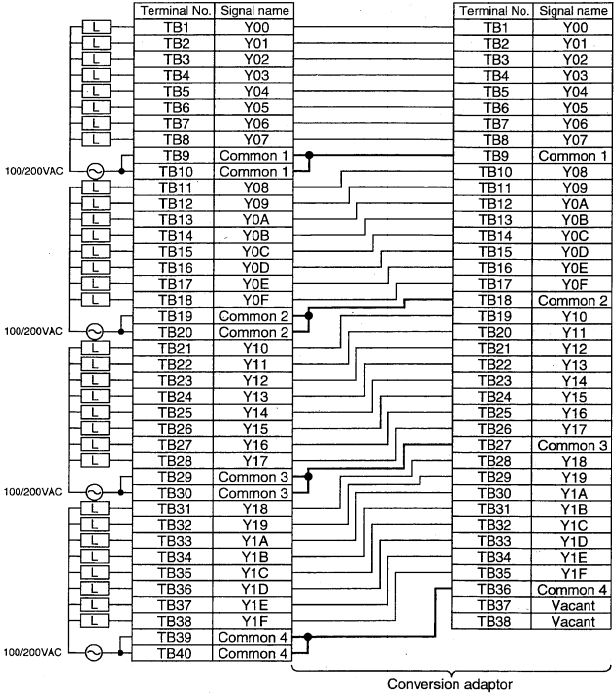

3.10 A6KA-TY41 (Refer to Section 5.3 Restricted Matters for Using), A6KA-TY51 Connection Figure

Adaptor name	K-series module name	Number of connection	A-series module name
A6KA-TY41	KY41N	32 points	AY41
A6KA-TY51	KY51N	32 points	AY51

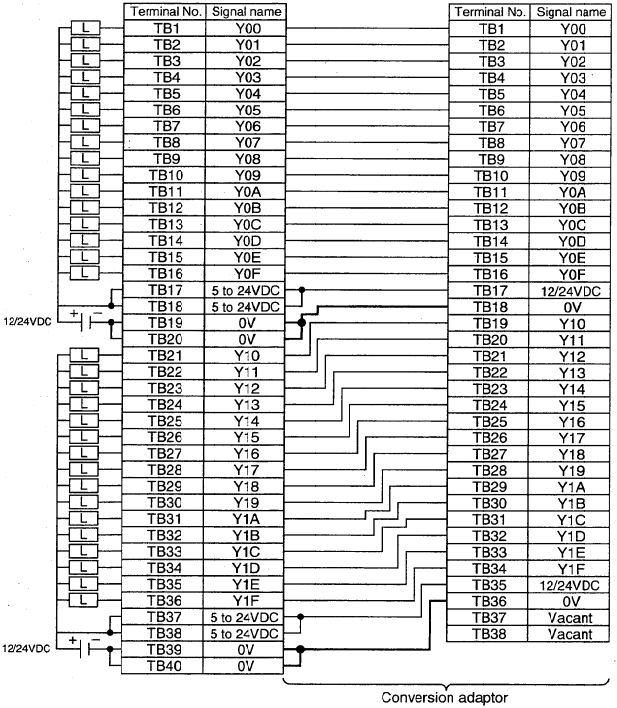

3.11 A6KA-CX42 Connection Figure

Adaptor name	K-series module name	Number of connection	A-series module name
A6KA-CX42	KX42N	64 points	AX42

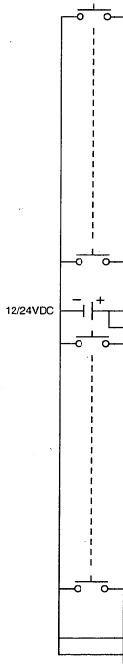

Terminal No.	Signal name	Terminal No.	Signal name
1A1	X00	1B20	X00
1A2	X01	1B19	X01
1A3	X02	1B18	X02
1A4	X03	1B17	X03
1A5	X04	1B16	X04
1A6	X05	1B15	X05
1A7	X06	1B14	X06
1A8	X07	1B13	X07
1A9	X08	1B12	X08
1A10	X09	1B11	X09
1A11	X0A	1B10	X0A
1A12	X0B	1B9	X0B
1A13	X0C	1B8	X0C
1A14	X0D	1B7	X0D
1A15	X0E	1B6	X0E
1A16	X0F	1B5	X0F
1A17	Vacant	1B4	Vacant
1A18	Vacant	1B3	Vacant
1A19	DC+12/24	1B2	DC+12/24
1A20	DC+12/24	1B1	DC+12/24
1B1	X10	1A20	X10
1B2	X11	1A19	X11
1B3	X12	1A18	X12
1B4	X13	1A17	X13
1B5	X14	1A16	X14
1B6	X15	1A15	X15
1B7	X16	1A14	X16
1B8	X17	1A13	X17
1B9	X18	1A12	X18
1B10	X19	1A11	X19
1B11	X1A	1A10	X1A
1B12	X1B	1A9	X1B
1B13	X1C	1A8	X1C
1B14	X1D	1A7	X1D
1B15	X1E	1A6	X1E
1B16	X1F	1A5	X1F
1B17	Vacant	1A4	Vacant
1B18	Vacant	1A3	Vacant
1B19	0V	1A2	Vacant
1B20	0V	1A1	Vacant

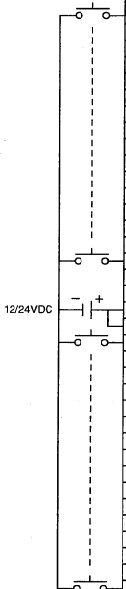

Terminal No.	Signal name		Terminal No.	Signal name
2A1	X20		2B20	X20
2A2	X21		2B19	X21
2A3	X22		2B18	X22
2A4	X23		2B17	X23
2A5	X24		2B16	X24
2A6	X25		2B15	X25
2A7	X26		2B14	X26
2A8	X27		2B13	X27
2A9	X28		2B12	X28
2A10	X29		2B11	X29
2A11	X2A		2B10	X2A
2A12	X2B		2B9	X2B
2A13	X2C		2B8	X2C
2A14	X2D		2B7	X2D
2A15	X2E		2B6	X2E
2A16	X2F		2B5	X2F
2A17	Vacant		2B4	Vacant
2A18	Vacant		2B3	Vacant
2A19	DC+12/24		2B2	DC+12/24
2A20	DC+12/24		2B1	DC+12/24
2B1	X30		2A20	X30
2B2	X31		2A19	X31
2B3	X32		2A18	X32
2B4	X33		2A17	X33
2B5	X34		2A16	X34
2B6	X35		2A15	X35
2B7	X36		2A14	X36
2B8	X37		2A13	X37
2B9	X38		2A12	X38
2B10	X39		2A11	X39
2B11	X3A		2A10	X3A
2B12	X3B		2A9	X3B
2B13	X3C		2A8	X3C
2B14	X3D		2A7	X3D
2B15	X3E		2A6	X3E
2B16	X3F		2A5	X3F
2B17	Vacant		2A4	Vacant
2B18	Vacant		2A3	Vacant
2B19	0V		2A2	Vacant
2B20	0V		2A1	Vacant

Conversion adaptor

3.12 A6KA-CY42 Connection Figure (Refer to Section 5.3 Restricted Matters for Using)

Adaptor name	K-series module name	Number of connection	A-series module name
A6KA-CY42	KY42N	64 points	AY42

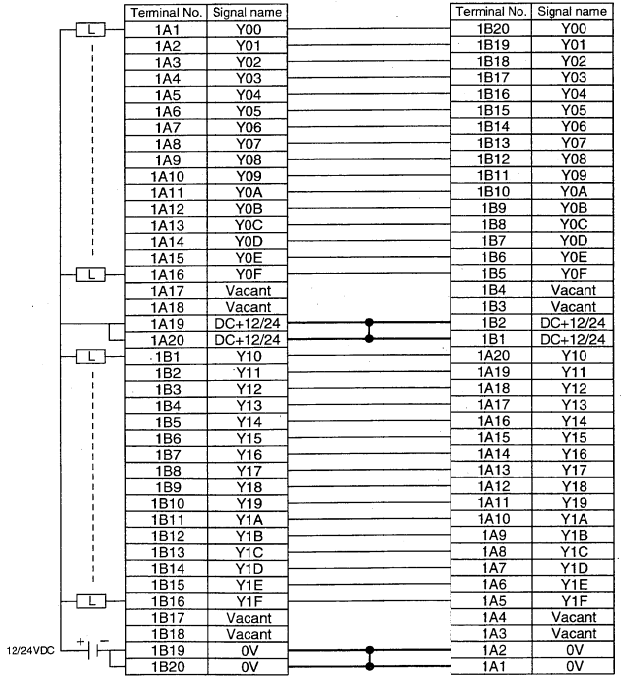

Terminal No.	Signal name	Terminal No.	Signal name
1A1	Y00	1B20	Y00
1A2	Y01	1B19	Y01
1A3	Y02	1B18	Y02
1A4	Y03	1B17	Y03
1A5	Y04	1B16	Y04
1A6	Y05	1B15	Y05
1A7	Y06	1B14	Y06
1A8	Y07	1B13	Y07
1A9	Y08	1B12	Y08
1A10	Y09	1B11	Y09
1A11	Y0A	1B10	Y0A
1A12	Y0B	1B9	Y0B
1A13	Y0C	1B8	Y0C
1A14	Y0D	1B7	Y0D
1A15	Y0E	1B6	Y0E
1A16	Y0F	1B5	Y0F
1A17	Vacant	1B4	Vacant
1A18	Vacant	1B3	Vacant
1A19	DC+12/24	1B2	DC+12/24
1A20	DC+12/24	1B1	DC+12/24
1B1	Y10	1A20	Y10
1B2	Y11	1A19	Y11
1B3	Y12	1A18	Y12
1B4	Y13	1A17	Y13
1B5	Y14	1A16	Y14
1B6	Y15	1A15	Y15
1B7	Y16	1A14	Y16
1B8	Y17	1A13	Y17
1B9	Y18	1A12	Y18
1B10	Y19	1A11	Y19
1B11	Y1A	1A10	Y1A
1B12	Y1B	1A9	Y1B
1B13	Y1C	1A8	Y1C
1B14	Y1D	1A7	Y1D
1B15	Y1E	1A6	Y1E
1B16	Y1F	1A5	Y1F
1B17	Vacant	1A4	Vacant
1B18	Vacant	1A3	Vacant
1B19	0V	1A2	0V
1B20	0V	1A1	0V

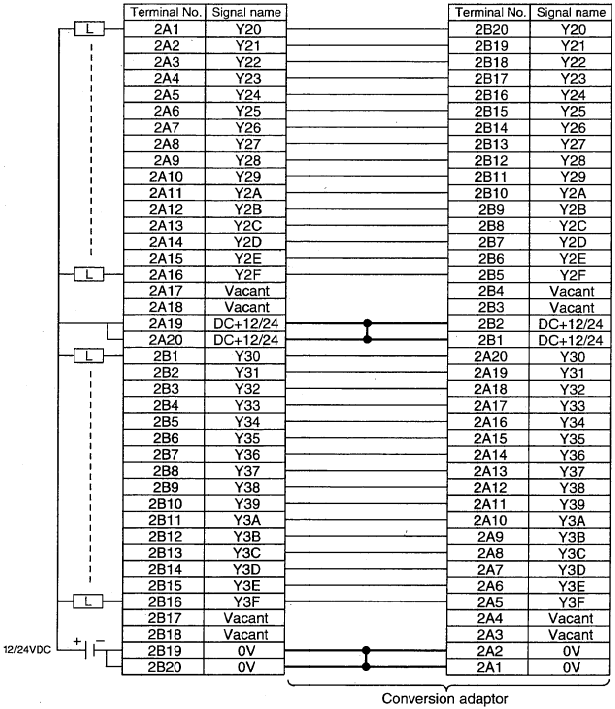

* There may be some gap between the AY42 and A6KA-CY42, but this does not cause any problem in the usage of the product.

3.13 A6KA-CH32 Connection Figure

Adaptor name	K-series module name	Number of connection	A-series module name
A6KA-CH32	KH32	64 points	AH42

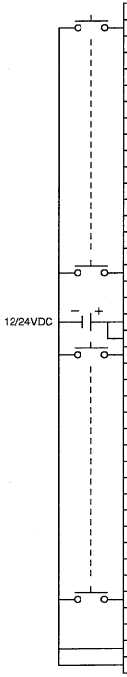

Terminal No.	Signal name	Terminal No.	Signal name
1A1	X00	1B20	X00
1A2	X01	1B19	X01
1A3	X02	1B18	X02
1A4	X03	1B17	X03
1A5	X04	1B16	X04
1A6	X05	1B15	X05
1A7	X06	1B14	X06
1A8	X07	1B13	X07
1A9	X08	1B12	X08
1A10	X09	1B11	X09
1A11	X0A	1B10	X0A
1A12	X0B	1B9	X0B
1A13	X0C	1B8	X0C
1A14	X0D	1B7	X0D
1A15	X0E	1B6	X0E
1A16	X0F	1B5	X0F
1A17	Vacant	1B4	Vacant
1A18	Vacant	1B3	Vacant
1A19	DC+12/24	1B2	DC+12/24
1A20	DC+12/24	1B1	DC+12/24
1B1	X10	1A20	X10
1B2	X11	1A19	X11
1B3	X12	1A18	X12
1B4	X13	1A17	X13
1B5	X14	1A16	X14
1B6	X15	1A15	X15
1B7	X16	1A14	X16
1B8	X17	1A13	X17
1B9	X18	1A12	X18
1B10	X19	1A11	X19
1B11	X1A	1A10	X1A
1B12	X1B	1A9	X1B
1B13	X1C	1A8	X1C
1B14	X1D	1A7	X1D
1B15	X1E	1A6	X1E
1B16	X1F	1A5	X1F
1B17	Vacant	1A4	Vacant
1B18	Vacant	1A3	Vacant
1B19	0V	1A2	Vacant
1B20	0V	1A1	Vacant

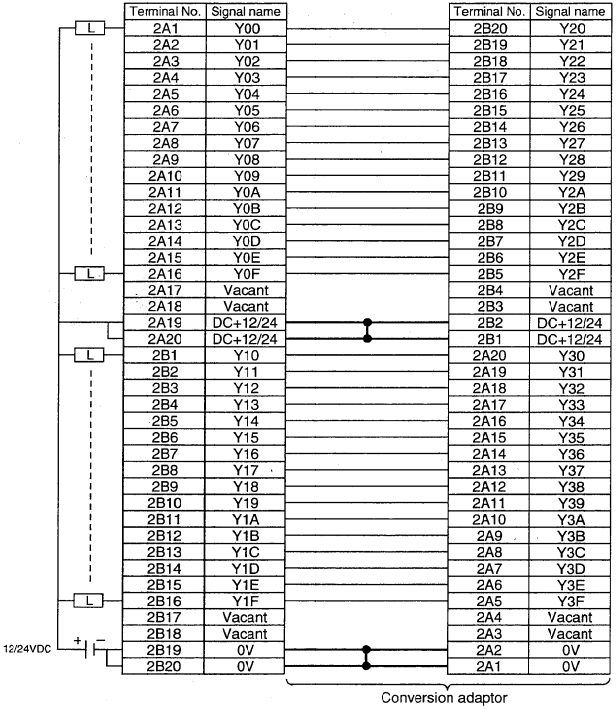

Terminal No.	Signal name	Terminal No.	Signal name
2A1	Y00	2B20	Y20
2A2	Y01	2B19	Y21
2A3	Y02	2B18	Y22
2A4	Y03	2B17	Y23
2A5	Y04	2B16	Y24
2A6	Y05	2B15	Y25
2A7	Y06	2B14	Y26
2A8	Y07	2B13	Y27
2A9	Y08	2B12	Y28
2A10	Y09	2B11	Y29
2A11	Y0A	2B10	Y2A
2A12	Y0B	2B9	Y2B
2A13	Y0C	2B8	Y2C
2A14	Y0D	2B7	Y2D
2A15	Y0E	2B6	Y2E
2A16	Y0F	2B5	Y2F
2A17	Vacant	2B4	Vacant
2A18	Vacant	2B3	Vacant
2A19	DC+12/24	2B2	DC+12/24
2A20	DC+12/24	2B1	DC+12/24
2B1	Y10	2A20	Y30
2B2	Y11	2A19	Y31
2B3	Y12	2A18	Y32
2B4	Y13	2A17	Y33
2B5	Y14	2A16	Y34
2B6	Y15	2A15	Y35
2B7	Y16	2A14	Y36
2B8	Y17	2A13	Y37
2B9	Y18	2A12	Y38
2B10	Y19	2A11	Y39
2B11	Y1A	2A10	Y3A
2B12	Y1B	2A9	Y3B
2B13	Y1C	2A8	Y3C
2B14	Y1D	2A7	Y3D
2B15	Y1E	2A6	Y3E
2B16	Y1F	2A5	Y3F
2B17	Vacant	2A4	Vacant
2B18	Vacant	2A3	Vacant
2B19	0V	2A2	0V
2B20	0V	2A1	0V

4. PART IDENTIFICATION

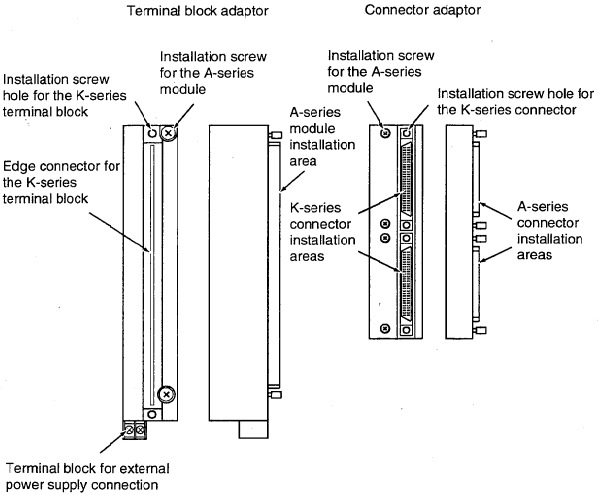

5. HANDLING

5.1 Precautions for Handling/Installation and Handling Method

(1) Do not touch the terminal block or connector while the power is on. It may cause an electric shock and a malfunction.
(2) Do not disassemble or reassemble the conversion adaptor. This may cause breakdowns, injury and fire.
(3) Do not directly touch the conductive area of the conversion adaptor. Doing so may result in system malfunction or breakdowns.
(4) When a terminal-block-type conversion adaptor is used, first remove the terminal block from the A-series side, then mount the conversion adaptor.

5.2 Installation Screws

Refer to the following table for the screw size and tightening torque when installing the conversion adaptor to the A-series module, and installing the connector or terminal block to the conversion adaptor:

Screw	Tightening torque range
Installation screw for the connector-type K/A conversion adaptor (M2.6 screw)	25 to 35N·cm (2.6 to 3.5kg·cm) (2.3 to 3.1lb·inch)
Installation screw for the K-series connector (M2.6 screw)	25 to 35N·cm (2.6 to 3.5kg·cm) (2.3 to 3.1lb·inch)
Installation screw for the terminal-block-type K/A conversion adaptor (M4 screw)	78 to 118N·cm (8 to 12kg·cm) (6.9 to 10.4lb·inch)
Installation screw for the K-series terminal block (M4 screw)	78 to 118N·cm (8 to 12kg·cm) (6.9 to 10.4lb·inch)

5.3 Restricted Matters for Using

The following list shows products that are restricted to use.

Model	Restricted matters
A6KA-TY10	The A-series output module requires a 24VDC external power supply. Connect the power supply to the terminal block for the external power supply connection on the conversion adaptor. Refer to the Building Block Type I/O Module User's Manual for the current capacity.
A6KA-TY10	
A6KA-TY13	
A6KA-TY41	If the load drive power supply voltage of 5V is used, there is no applicable A-series module models, so change the voltage to 12VDC or 24VDC.
A6KA-CY42	If the load drive power supply voltage of 5V is used, there is no applicable A-series module models, so change the voltage to 12VDC or 24VDC. Alternatively, use the AY42-S2 module.

5.4 Terminal Block for External Power Supply Connection

When connecting the power supply to the terminal block for the external power supply connection, use the following values for the size of parts and tightening torque:

Applicable wire size	0.75 to 2mm^2
Applicable solderless terminal size	R1.25-3, R2-3, RAV1.25-3, RAV2-3
Tightening torque of the terminal screw (M3 screw)	39 to 59N·cm (4 to 6kg·cm) (3.5 to 5.2lb inch)

6. EXTERNAL DIMENSIONS DIAGRAM

6.1 Terminal-Block-Type Conversion Adaptor

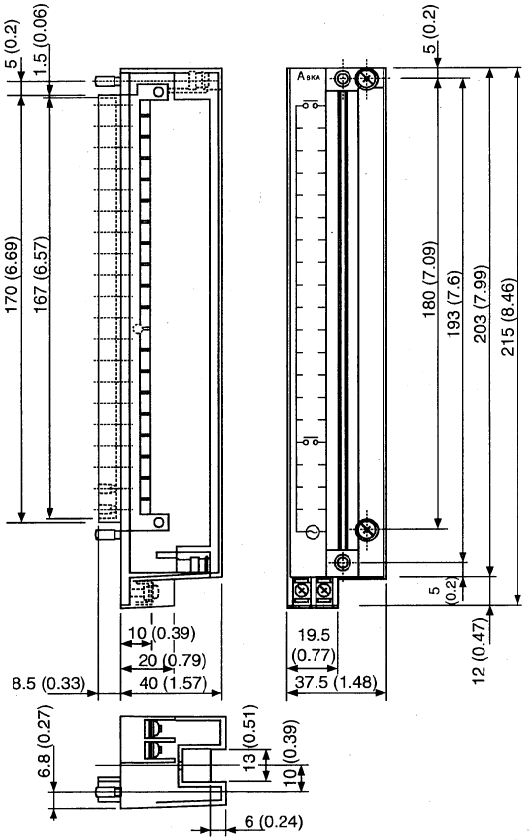

Unit: mm (inch)

6.2 Connector-Type Conversion Adaptor

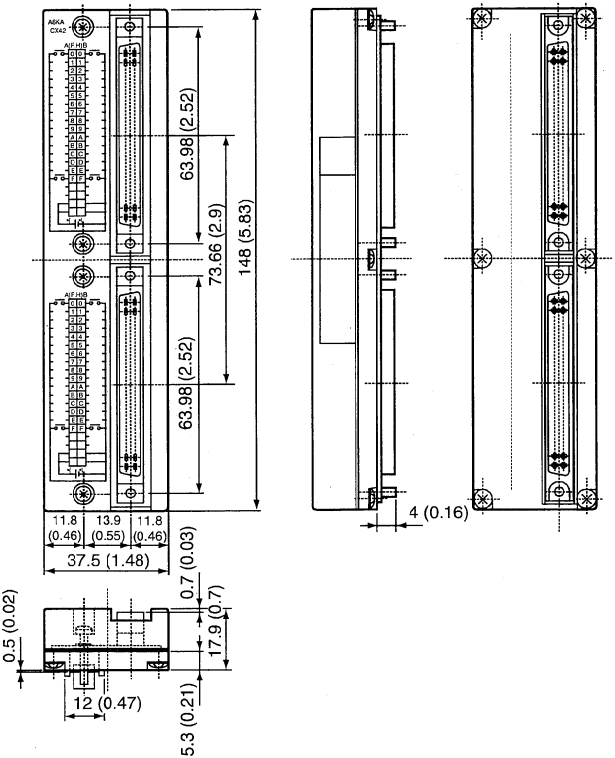

Unit: mm (inch)

The United States	Mitsubishi Electronics America. Inc., (Industrial Automation Division) 800 Biemann Court, Mt. Prospect, IL 60056. Phone : (708) 298-9223
Canada	Mitsubishi Electric Sales Canada, Inc., (Industrial Automation Division) 4299 14th Avenue, Markham, Ontario L3R OJ2 Phone : (416) 475-7728
United Kingdom	Mitsubishi Electric UK Ltd., (Industrial Sales Division) Travellers Lane, Hatfield, Herts., AL10 8XB Phone : (0707) 276100
Germany	Mitsubishi Electric Europe GmbH, (Industrial Automation Division) Gothaer Strasse 8, Postfach 1548, D-4030 Ratingen 1 Phone : (02102) 4860
Taiwan	Setsuyo Enterprise Co., Ltd., (106) 11th Fl., Chung-Ling Bldg., 363, Sec. 2, Fu-Hsing S. Rd., Taipei, Taiwan. R.O.C. Phone : (02) 732-0161
Hongkong (& China)	Ryoden International Ltd., (Industrial & Electrical Controls Division) 10/F., Manulife Tower, 169 Electric Rd., North Point, Hong Kong. Phone : 8878870
Singapore (& Malaysia)	MELCO Sales Singapore Pte. Ltd., (Industrial Division) 307 Alexandra Rd. #05-01/02, Mitsubishi Electric Bldg., Singapore 0315. Phone : 4732308
Thailand	F.A. Tech Co., Ltd., 1138/33-34 Rama 3 Rd., Yannawa, Bangkok 10120. Phone : (02) 295-2861-4
Australia	Mitsubishi Electric Australia Pty. Ltd., (Industrial Controls Division) 348 Victoria Rd., Rydalmere, N.S.W. 2116. Phone : (02) 684-7200
Republic of South Africa	M.S.A. Manufacturing (Pty) Ltd., (Factory Automation Division) P.O. Box 39733, Bramley, Johannesburg 2018. Phone : (011) 444-8080

MITSUBISHI ELECTRIC CORPORATION
HEAD OFFICE: MITSUBISHI DENKI BLDG MARUNOUCHI TOKYO 100 TELEX: J24532 CABLE MELCO TOKYO
NAGOYA WORKS: 1-14, YADA-MINAMI 5, HIGASHI-KU, NAGOYA, JAPAN

When exported from Japan, this manual does not require application to the Ministry of International Trade and Industry for service transaction permission.

Printed in Japan on recycled paper

Specifications subject to change without notice.