MITSUBISHI ELECTRIC

GRAPHIC OPERATION TERMINAL

GOT2000 Series

Connection Manual (Non-Mitsubishi Products 1)

For GT Works3 Version1

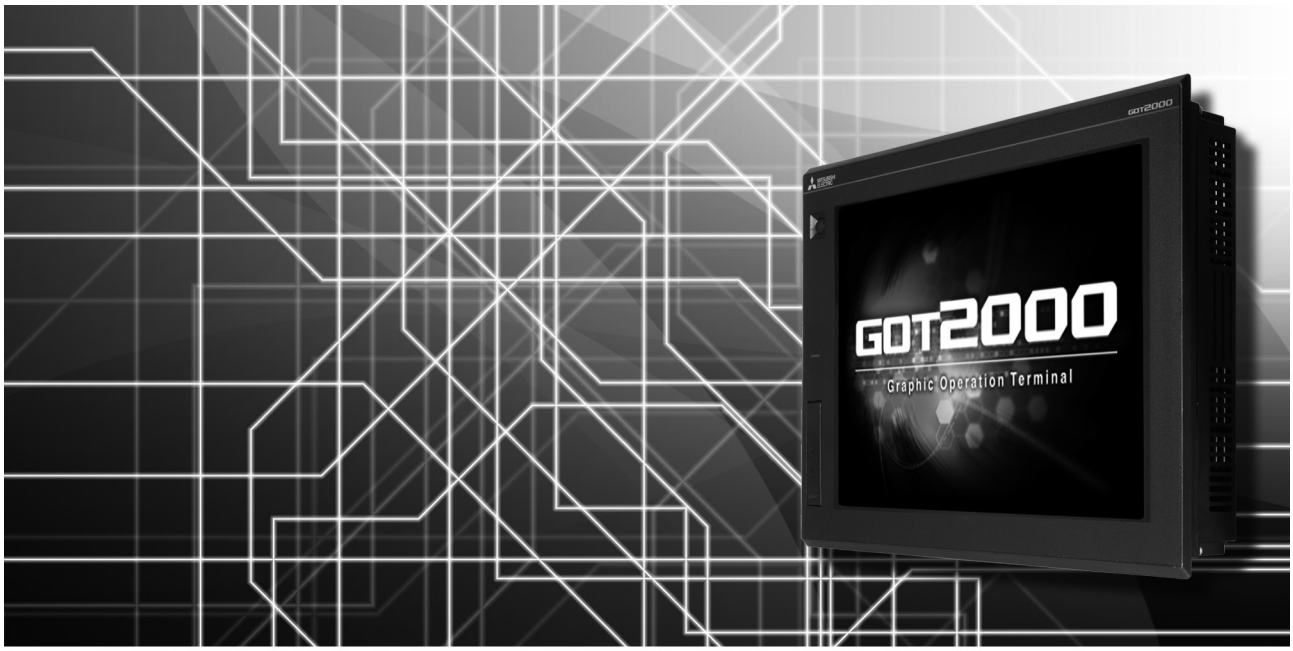

- ■IAI ROBOT CONTROLLER
- ■AZBIL (former YAMATAKE) CONTROL EQUIPMENT
- ■OMRON PLC
- ■OMRON TEMPERATURE CONTROLLER
- ■KEYENCE PLC
- ■KOYO EI PLC
- ■JTEKT PLC
- ■SHARP PLC
- ■SHINKO TECHNOS INDICATING CONTROLLER
- ■CHINO CONTROLLER
- ■TOSHIBA MACHINE PLC
- ■TOSHIBA PLC
- ■PANASONIC SERVO AMPLIFIER
- ■PANASONIC INDUSTRIAL DEVICES SUNX PLC

● SAFETY PRECAUTIONS ●

(Always read these precautions before using this equipment.)

Before using this product, please read this manual and the relevant manuals introduced in this manual carefully and pay full attention to safety to handle the product correctly.
The precautions given in this manual are concerned with this product.
In this manual, the safety precautions are ranked as "WARNING" and "CAUTION".

⚠ **WARNING**	Indicates that incorrect handling may cause hazardous conditions, resulting in death or severe injury.
⚠ **CAUTION**	Indicates that incorrect handling may cause hazardous conditions, resulting in medium or slight personal injury or physical damage.

Note that the ⚠caution level may lead to a serious accident according to the circumstances. Always follow the instructions of both levels because they are important to personal safety.

Please save this manual to make it accessible when required and always forward it to the end user.

[DESIGN PRECAUTIONS]

⚠WARNING

- Some failures of the GOT, communication unit or cable may keep the outputs on or off.
  Some failures of a touch panel may cause malfunction of the input objects such as a touch switch.
  An external monitoring circuit should be provided to check for output signals which may lead to a serious accident.Not doing so can cause an accident due to false output or malfunction.
- Do not use the GOT as the warning device that may cause a serious accident.
  An independent and redundant hardware or mechanical interlock is required to configure the device that displays and outputs serious warning.
  Failure to observe this instruction may result in an accident due to incorrect output or malfunction.
- When the GOT backlight has a failure, the GOT status will be as follows. Failure to observe this instruction may result in an accident due to incorrect output or malfunction.
  - GT27, GT25, GT23
    When the GOT backlight has a failure, the POWER LED blinks (orange/blue) and the display section dims. In such a case, the input by the touch switch(s) is disabled.
  - GT21
    When the GOT backlight has a failure, the display section dims. In such a case, the input by the touch switches is disabled.

  Even if the display section dims on the liquid crystal of the GOT, the input by the touch switch(s) may remain enabled. This may cause a malfunction of the touch switch.
  For example, if an operator assumes that the display section has dimmed because of the screen save function and touches the display section to cancel the screen save, a touch switch may be activated.
  The GOT backlight failure can be checked with a system signal of the GOT.

[DESIGN PRECAUTIONS]

⚠WARNING

- The display section of the GOT is an analog-resistive type touch panel.
  When multiple points of the display section are touched simultaneously, an accident may occur due to incorrect output or malfunction.
  - GT27
    Do not touch three points or more simultaneously on the display section. Doing so may cause an accident due to an incorrect output or malfunction.
  - GT25, GT23, GT21
    Do not touch two points or more simultaneously on the display section. Doing so may operate the switch located around the center of the touched point, or may cause an accident due to an incorrect output or malfunction.
- When programs or parameters of the controller (such as a PLC) that is monitored by the GOT are changed, be sure to reset the GOT, or turn on the unit again after shutting off the power as soon as possible.
  Not doing so can cause an accident due to false output or malfunction.
- If a communication fault (including cable disconnection) occurs during monitoring on the GOT, communication between the GOT and PLC CPU is suspended and the GOT becomes inoperative.
  For bus connection (GT27, GT25 Only) : The CPU becomes faulty and the GOT becomes inoperative.
  For other than bus connection : The GOT becomes inoperative.
  A system where the GOT is used should be configured to perform any significant operation to the system by using the switches of a device other than the GOT on the assumption that a GOT communication fault will occur.
  Not doing so can cause an accident due to false output or malfunction.

[DESIGN PRECAUTIONS]

⚠CAUTION

- Do not bundle the control and communication cables with main-circuit, power or other wiring. Run the above cables separately from such wiring and keep them a minimum of 100mm apart. Not doing so noise can cause a malfunction.
- Do not press the GOT display section with a pointed material as a pen or driver. Doing so can result in a damage or failure of the display section.
- When a GOT2000 series model and a GOT1000 series model are on an Ethernet network, do not set the IP address 192.168.0.18 for the GOTs and the controllers on this network. Doing so can cause IP address duplication at the GOT startup, adversely affecting the communication of the device with the IP address 192.168.0.18. The operation at the IP address duplication depends on the devices and the system.
- Turn on the controllers and the network devices to be ready for communication before they communicate with the GOT. Failure to do so can cause a communication error on the GOT.
- When the GOT is subject to shock or vibration, or some colors appear on the screen of the GOT, the screen of the GOT might flicker.

[MOUNTING PRECAUTIONS]

⚠WARNING

- Be sure to shut off all phases of the external power supply used by the system before mounting or removing the GOT main unit to/from the panel. Not doing so can cause the unit to fail or malfunction.
- Be sure to shut off all phases of the external power supply used by the system before mounting or removing the option unit onto/from the GOT. (GT27, GT25 Only)

[MOUNTING PRECAUTIONS]

⚠CAUTION

- Use the GOT in the environment that satisfies the general specifications described in this manual. Not doing so can cause an electric shock, fire, malfunction or product damage or deterioration.
- When mounting the GOT to the control panel, tighten the mounting screws in the specified torque range with a Phillips-head screwdriver No.2.
  - GT27, GT25, GT23
    Specified torque range (0.36 N•m to 0.48 N•m)
  - GT21
    Specified torque range (0.20 N•m to 0.25 N•m)

  Undertightening can cause the GOT to drop, short circuit or malfunction.
  Overtightening can cause a drop, short circuit or malfunction due to the damage of the screws or the GOT.
- When mounting a unit on the GOT, tighten the mounting screws in the following specified torque range.
  - GT27, GT25
    When loading the communication unit or option unit other than wireless LAN unit to the GOT, fit it to the connection interface of the GOT and tighten the mounting screws in the specified torque range (0.36 N•m to 0.48 N•m) with a Phillips-head screwdriver No.2.
    When loading the wireless LAN unit to the GOT, fit it to the side interface of GOT and tighten the mounting screws in the specified torque range (0.10 N•m to 0.14 N•m) with a Phillips-head screwdriver No.1.
    When the GOT is installed vertically, its side interface is positioned on the bottom.
    To prevent the falling of the wireless LAN communication unit from the side interface, install or remove the unit while holding it with hands.
  - GT21
    When mounting the SD card unit on the GOT, fit it to the side of the GOT and tighten the tapping screws in the specified torque range (0.3 N•m to 0.6 N•m) with a Phillips-head screwdriver No.2.

  Under tightening can cause the GOT to drop, short circuit or malfunction.
  Overtightening can cause a drop, failure or malfunction due to the damage of the screws or unit.
- When closing the USB environmental protection cover, fix the cover to the GOT by pushing the [PUSH] mark on the latch firmly to comply with the protective structure.(GT27, GT25 Only)
- Remove the protective film of the GOT.
  When the user continues using the GOT with the protective film, the film may not be removed.
  In addition, for the models equipped with the human sensor function, using the GOT with the protective film may cause the human sensor not to function properly
- Operate and store the GOT in environments without direct sunlight, high temperature, dust, humidity, and vibrations.
- When using the GOT in the environment of oil or chemicals, use the protective cover for oil.
  Failure to do so may cause failure or malfunction due to the oil or chemical entering into the GOT.

[WIRING PRECAUTIONS]

⚠WARNING

- Be sure to shut off all phases of the external power supply used by the system before wiring.
  Failure to do so may result in an electric shock, product damage or malfunctions.

[WIRING PRECAUTIONS]

⚠CAUTION

- Make sure to ground the FG terminal and LG terminal of the GOT power supply section to the protective ground conductors dedicated to the GOT with a ground resistance of 100 Ω or less. (GT21 does not have the LG terminal.)
- When tightening the terminal screws, use a Phillips-head screwdriver No.2.
- Tighten the terminal screws of the GOT power supply section in the following specified torque range.
  - GT27, GT25, GT23
    Specified torque range (0.5 N•m to 0.8 N•m)
- For a terminal processing of a wire to the GOT power supply section, use the following terminal.
  - GT27, GT25, GT23
    Use applicable solderless terminals for terminal processing of a wire and tighten them with the specified torque.
    Not doing so can cause a fire, failure or malfunction.
  - GT21
    Connect a stranded wire or a single wire directly, or use a rod terminal with an insulation sleeve.
- Correctly wire the GOT power supply section after confirming the rated voltage and terminal arrangement of the product.
  Not doing so can cause a fire or failure.
- Tighten the terminal screws of the GOT power supply section in the following specified torque range.
  - GT27, GT25, GT23
    Specified torque range (0.5 N•m to 0.8 N•m)
  - GT21
    Specified torque range (0.22 N•m to 0.25 N•m)
- Exercise care to avoid foreign matter such as chips and wire offcuts entering the GOT.
  Not doing so can cause a fire, failure or malfunction.
- The module has an ingress prevention label on its top to prevent foreign matter, such as wire offcuts, from entering the module during wiring.
  Do not peel this label during wiring.Before starting system operation, be sure to peel this label because of heat dissipation. (GT27, GT25 Only)
- Plug the communication cable into the GOT interface or the connector of the connected unit, and tighten the mounting screws and the terminal screws in the specified torque range.
  Undertightening can cause a short circuit or malfunction.
  Overtightening can cause a short circuit or malfunction due to the damage of the screws or unit.
- Plug the QnA/ACPU/Motion controller (A series) bus connection cable by inserting it into the connector of the connected unit until it "clicks".
  After plugging, check that it has been inserted snugly.
  Not doing so can cause a malfunction due to a contact fault. (GT27, GT25 Only)

[TEST OPERATION PRECAUTIONS]

⚠WARNING

- Before performing the test operations of the user creation monitor screen (such as turning ON or OFF bit device, changing the word device current value, changing the settings or current values of the timer or counter, and changing the buffer memory current value), read through the manual carefully and make yourself familiar with the operation method.
  During test operation, never change the data of the devices which are used to perform significant operation for the system.
  False output or malfunction can cause an accident.

[STARTUP/MAINTENANCE PRECAUTIONS]

⚠WARNING

- When power is on, do not touch the terminals.
  Doing so can cause an electric shock or malfunction.
- Correctly connect the battery connector.
  Do not charge, disassemble, heat, short-circuit, solder, or throw the battery into the fire.
  Doing so will cause the battery to produce heat, explode, or ignite, resulting in injury and fire.
- Before starting cleaning or terminal screw retightening, always switch off the power externally in all phases.
  Not switching the power off in all phases can cause a unit failure or malfunction.
  Undertightening can cause a short circuit or malfunction.
  Overtightening can cause a short circuit or malfunction due to the damage of the screws or unit.

[STARTUP/MAINTENANCE PRECAUTIONS]

⚠CAUTION

- Do not disassemble or modify the unit.
  Doing so can cause a failure, malfunction, injury or fire.
- Do not touch the conductive and electronic parts of the unit directly.
  Doing so can cause a unit malfunction or failure.
- The cables connected to the unit must be run in ducts or clamped.
  Not doing so can cause the unit or cable to be damaged due to the dangling, motion or accidental pulling of the cables or can cause a malfunction due to a cable connection fault.
- When unplugging the cable connected to the unit, do not hold and pull from the cable portion.
  Doing so can cause the unit or cable to be damaged or can cause a malfunction due to a cable connection fault.
- Do not drop the module or subject it to strong shock. A module damage may result.
- Do not drop or give an impact to the battery mounted to the unit.
  Doing so may damage the battery, causing the battery fluid to leak inside the battery.
  If the battery is dropped or given an impact, dispose of it without using.
- Before touching the unit, always touch grounded metals, etc. to discharge static electricity from human body, etc.
  Not doing so can cause the unit to fail or malfunction.
- Use the battery manufactured by Mitsubishi Electric Corporation.
  Use of other batteries may cause a risk of fire or explosion.
- Dispose of used battery promptly.
  Keep away from children.Do not disassemble and do not dispose of in fire.
- Be sure to shut off all phases of the external power supply before replacing the battery or using the dip switch of the terminating resistor.
  Not doing so can cause the unit to fail or malfunction by static electricity.

[TOUCH PANEL PRECAUTIONS]

⚠CAUTION

- For the analog-resistive film type touch panels, normally the adjustment is not required.
  However, the difference between a touched position and the object position may occur as the period of use elapses.
  When any difference between a touched position and the object position occurs, execute the touch panel calibration.
- When any difference between a touched position and the object position occurs, other object may be activated.
  This may cause an unexpected operation due to incorrect output or malfunction.

[PRECAUTIONS WHEN THE DATA STORAGE IS IN USE]

⚠WARNING

- If the SD card is removed from drive A of the GOT while being accessed by the GOT, the GOT may stop processing data for about 20 seconds.
  The GOT cannot be operated during this period.
  The functions that run in the background including a screen updating, alarm, logging, scripts, and others are also interrupted.
  Remove the SD card after checking the following items.
  - GT27, GT25, GT23
    After checking the light off of SD card access LED, remove the SD card.
  - GT21
    After disabling SD card access on the utility screen of the GOT and checking that the SD card access LED is off, remove the SD card.

⚠CAUTION

- If the data storage is removed from the GOT while being accessed by the GOT, the data storage and files may be damaged.
  Before removing the data storage from the GOT, check the SD card access LED, system signal, or others to make sure that the data storage is not accessed.
- Turning off the GOT while it accesses the SD card results in damage to the SD card and files.
- When using the GOT with an SD card inserted, check the following items.
  - GT27, GT25, GT23
    When inserting a SD card into the GOT, make sure to close the SD card cover.
    Failure to do so causes the data not to be read or written.
  - GT21
    When using an SD card connected to the SD card unit or the GOT, enable the SD card access in the GOT utility in advance.
    Failure to do so causes the data not to be read or written.
- When removing the SD card from the GOT, make sure to support the SD card by hand as it may pop out.
  Failure to do so may cause the SD card to drop from the GOT, resulting in a failure or break.
- When inserting a USB device into a USB interface of the GOT, make sure to insert the device into the interface firmly.
  Failure to do so may cause the USB device to drop from the GOT, resulting in a failure or break.
- Before removing the USB device from the GOT, follow the procedure for removal on the utility screen of the GOT.
  After the successful completion dialog is displayed, remove the USB device by hand carefully.
  Failure to do so may cause the USB device to drop from the GOT, resulting in a failure or break.

[PRECAUTIONS FOR REMOTE CONTROL]

⚠WARNING

- Remote control is available through a network by using GOT functions, including theSoftGOT-GOT link function, the remote personal computer operation function, the VNC server function, and the GOT Mobile function.
  If these functions are used to perform remote control of control equipment, the field operator may not notice the remote control, possibly leading to an accident.
  In addition, a communication delay or interruption may occur depending on the network environment, and remote control of control equipment cannot be performed normally in some cases.
  Before using the above functions to perform remote control, fully grasp the circumstances of the field site and ensure safety.

[DISPOSAL PRECAUTIONS]

⚠CAUTION

- When disposing of this product, treat it as industrial waste.
  When disposing of batteries, separate them from other wastes according to the local regulations.
  (Refer to the GOT2000 Series User's Manual (Hardware) for details of the battery directive in the EU member states.)

[TRANSPORTATION PRECAUTIONS]

⚠CAUTION

- When transporting lithium batteries, make sure to treat them based on the transport regulations.
  (Refer to the GOT2000 Series User's Manual (Hardware) for details of the regulated models.)
- Make sure to transport the GOT main unit and/or relevant unit(s) in the manner they will not be exposed to the impact exceeding the impact resistance described in the general specifications of this manual, as they are precision devices.
  Failure to do so may cause the unit to fail.
  Check if the unit operates correctly after transportation.
- When fumigants that contain halogen materials such as fluorine, chlorine, bromine, and iodine are used for disinfecting and protecting wooden packaging from insects, they cause malfunction when entering our products.
  Please take necessary precautions to ensure that remaining materials from fumigant do not enter our products, or treat packaging with methods other than fumigation (heat method).
  Additionally, disinfect and protect wood from insects before packing products.

INTRODUCTION

Thank you for choosing Mitsubishi Graphic Operation Terminal (Mitsubishi GOT).
Read this manual and make sure you understand the functions and performance of the GOT thoroughly in advance to ensure correct use.

CONTENTS

SAFETY PRECAUTIONS ..... A - 1
INTRODUCTION ..... A - 10
CONTENTS ..... A - 10
List of Manuals for GT Works3 ..... A - 19
Abbreviations, Generic Terms, the meaning of the icon ..... A - 20

1. PREPARATORY PROCEDURES FOR MONITORING

1.1 Setting the Communication Interface ..... 1 - 3
1.1.1 Setting connected equipment (Channel setting) ..... 1 - 3
1.1.2 I/F communication setting ..... 1 - 12
1.1.3 Precautions ..... 1 - 14
1.2 Writing the Project Data onto the GOT ..... 1 - 15
1.2.1 Writing the project data and OS onto the GOT ..... 1 - 15
1.2.2 Checking the project data and OS writing on GOT ..... 1 - 16
1.3 Option Devices for the Respective Connection ..... 1 - 17
1.3.1 Communication module ..... 1 - 17
1.3.2 Option unit ..... 1 - 18
1.3.3 Conversion cables ..... 1 - 18
1.3.4 Serial Multi-Drop Connection Unit ..... 1 - 18
1.3.5 Field Network Adapter Unit ..... 1 - 18
1.3.6 Installing a unit on another unit (Checking the unit installation position) ..... 1 - 19
1.4 Connection Cables for the Respective Connection ..... 1 - 23
1.4.1 GOT connector specifications ..... 1 - 23
1.4.2 Coaxial cableconnector connection method ..... 1 - 25
1.4.3 Terminating resistors of GOT ..... 1 - 27
1.5 Verifying GOT Recognizes Connected Equipment ..... 1 - 31
1.6 Checking for Normal Monitoring ..... 1 - 33
1.6.1 Check on the GOT ..... 1 - 33
1.6.2 Confirming the communication state on the GOT side (For Ethernet connection) ..... 1 - 36
1.6.3 Confirming the communication state to each station (Station monitoring function) ..... 1 - 38

CONNECTIONS TO NON-MITSUBISHI PRODUCTS

2. CONNECTION TO IAI ROBOT CONTROLLER

2.1 Connectable Model List ..... 2 - 2
2.2 System Configuration ..... 2 - 3
2.2.1 System Configuration for connecting to X-SEL, SSEL, ASEL, PSEL ..... 2 - 3
2.2.2 System Configuration for connecting to PCON, ACON, SCON, ERC2 ..... 2 - 5

2.3Connection Diagram ..... 2 - 17
2.3.1RS-232 cable ..... 2 - 17
2.3.2RS-422/485 cable ..... 2 - 20
2.4GOT Side Settings ..... 2 - 26
2.4.1Setting communication interface (Communication settings) ..... 2 - 26
2.4.2Communication detail settings ..... 2 - 27
2.5Robot Controller Side Setting ..... 2 - 28
2.5.1Connecting to X-SEL ..... 2 - 28
2.5.2Connecting to SSEL, ASEL, PSEL ..... 2 - 30
2.5.3Connecting to PCON, ACON, SCON ..... 2 - 31
2.5.4Connecting to ERC2 ..... 2 - 31
2.5.5Station No.settings ..... 2 - 32
2.6Device Range that Can Be Set ..... 2 - 33
2.6.1IAI robot controller (IAI X-SELController) ..... 2 - 33
2.6.2IAI robot controller (IAI PCON, ACON, SCON, ERC2 controller) ..... 2 - 43
2.7Precautions ..... 2 - 49

3. CONNECTION TO AZBIL CONTROL EQUIPMENT

3.1Connectable Model List ..... 3 - 2
3.2System Configuration ..... 3 - 4
3.2.1Connecting to DMC10 ..... 3 - 4
3.2.2Connecting to DMC50 ..... 3 - 6
3.2.3Connecting to SDC15, SDC25/26 or SDC35/36 ..... 3 - 8
3.2.4Connecting to SDC20/21 ..... 3 - 10
3.2.5Connecting to SDC30/31 ..... 3 - 12
3.2.6Connecting to SDC40A/40B/40G ..... 3 - 14
3.2.7Connecting to SDC45/46 ..... 3 - 16
3.2.8Connecting to CMS, MQV, MPC, MVF, RX ..... 3 - 18
3.2.9Connecting to CMF015, CMF050 ..... 3 - 20
3.2.10Connecting to CML, PBC201-VN2 ..... 3 - 23
3.2.11Connecting to AUR350C, AUR450C ..... 3 - 25
3.2.12Connecting to CMC10B ..... 3 - 27
3.2.13Connecting to AHC2001 ..... 3 - 29
3.2.14Connecting to NX series ..... 3 - 32
3.3Connection Diagram ..... 3 - 33
3.3.1RS-232 cable ..... 3 - 33
3.3.2RS-485 cable ..... 3 - 35
3.4GOT Side Settings ..... 3 - 55
3.4.1Setting communication interface (Communication settings) ..... 3 - 55
3.4.2Communication detail settings ..... 3 - 56
3.5Control Equipment Side Setting ..... 3 - 58
3.5.1Connecting to DMC10 ..... 3 - 58
3.5.2Connecting to SDC40A/40B/40G ..... 3 - 59
3.5.3Connecting to SDC15, SDC25/26 or SDC35/36 ..... 3 - 59
3.5.4Connecting to SDC20/21, SDC30/31 ..... 3 - 60
3.5.5Connecting to CMC10L ..... 3 - 60
3.5.6Connecting to DMC50 ..... 3 - 62
3.5.7Connecting to SDC45/46 ..... 3 - 62
3.5.8Connecting to CMS, CMF015 ..... 3 - 63

3.5.9Connecting to CML, CMF050 ..... 3 - 63
3.5.10Connecting to MQV ..... 3 - 63
3.5.11Connecting to MPC ..... 3 - 64
3.5.12Connecting to PBC201-VN2 ..... 3 - 64
3.5.13Connecting to MVF ..... 3 - 64
3.5.14Connecting to AUR350C, AUR450C ..... 3 - 66
3.5.15Connecting to RX ..... 3 - 67
3.5.16Connecting to CMC10B ..... 3 - 67
3.5.17Connecting to AHC2001 CPU ..... 3 - 68
3.5.18Connecting to AHC2001 SCU ..... 3 - 68
3.5.19Station number setting ..... 3 - 69
3.6Device Range that Can Be Set ..... 3 - 70
3.6.1AZBIL SDC/DMC Series ..... 3 - 71
3.6.2AZBIL DMC50/AHC2001 ..... 3 - 71
3.7Precautions ..... 3 - 73

4. CONNECTION TO OMRON PLC

4.1Connectable Model List ..... 4 - 2
4.2Serial Connection ..... 4 - 4
4.2.1System Configuration for connecting to CPM1, CPM1A, CPM2A, CPM2C or CQM1 ..... 4 - 4
4.2.2System Configuration for connecting to CQM1H ..... 4 - 7
4.2.3System Configuration for connecting to CJ1H, CJ1G, CJ1M, CJ2H, or CJ2M ..... 4 - 9
4.2.4System Configuration for connecting to CP1H, CP1L, or CP1E ..... 4 - 14
4.2.5System Configuration for connecting to C200HS, C200H, C200HX, C200HG, or C200HE ..... 4 - 17
4.2.6System Configuration for connecting to CS1H, CS1G, or CS1D ..... 4 - 20
4.2.7System Configuration for connecting to C1000H or C2000H ..... 4 - 23
4.2.8System Configuration for connecting to CV500, CV1000, CV2000, or CVM1 ..... 4 - 24
4.2.9Connection Diagram ..... 4 - 25
4.2.10GOT Side Settings ..... 4 - 30
4.2.11PLC Side Setting ..... 4 - 32
4.2.12Connecting to CPM2A, CQM1, CQM1H, C200H or RS-232C adapter ..... 4 - 33
4.2.13Connecting to CJ1, CJ2, CS1, CP1H, CP1L, or CP1E ..... 4 - 34
4.2.14Connecting to CV500/CV1000/CV2000 or CVM1 ..... 4 - 37
4.2.15Connecting to connection cable ..... 4 - 38
4.2.16Connecting to rack type host link unit ..... 4 - 39
4.2.17Connecting to serial communication unit ..... 4 - 44
4.2.18Connecting to communication board, serial communication board (CQM1-SCB41) ..... 4 - 44
4.2.19Connecting to serial communication board (CS1W-SCB21(-V1), CS1W-SCB41(-V1)) ..... 4 - 46
4.2.20Connecting to RS-422A/485 Option board ..... 4 - 47
4.2.21Connecting to RS-422A converter ..... 4 - 47
4.3Ethernet Connection ..... 4 - 48
4.3.1System configuration ..... 4 - 48
4.3.2GOT side settings ..... 4 - 50
4.3.3PLC side setting ..... 4 - 56
4.3.4Precautions ..... 4 - 57
4.4Device Range that Can Be Set ..... 4 - 58
4.4.1OMRON PLC ..... 4 - 59

5. CONNECTION TO OMRON TEMPERATURE CONTROLLER

5.1Connectable Model List ..... 5 - 2

5.2System Configuration ..... 5 - 3
5.2.1Connecting to the THERMAC NEO series ..... 5 - 3
5.2.2Connecting to the INPANEL NEO ..... 5 - 6
5.3Connection Diagram ..... 5 - 8
5.3.1RS-232 cable ..... 5 - 8
5.3.2RS-485 cable ..... 5 - 9
5.4GOT Side Settings ..... 5 - 13
5.4.1Setting communication interface (Communication settings) ..... 5 - 13
5.4.2Communication detail settings ..... 5 - 14
5.5Temperature Controller Side Setting ..... 5 - 15
5.5.1Connecting E5AN, E5EN, E5CN, E5GN ..... 5 - 15
5.5.2Connecting E5ZN ..... 5 - 15
5.5.3Connection to interface converter (K3SC-10) ..... 5 - 16
5.5.4Station No. settings ..... 5 - 17
5.6Device Range that Can Be Set ..... 5 - 19
5.6.1OMRON temperature controller (OMRON THERMAC/INPANEL NEO) ..... 5 - 20
5.7Precautions ..... 5 - 21

6. CONNECTION TO KEYENCE PLC

6.1Connectable Model List ..... 6 - 2
6.2Serial Connection ..... 6 - 3
6.2.1Connecting to KV-5500, KV-5000 ..... 6 - 3
6.2.2Connecting to KV-3000 ..... 6 - 5
6.2.3Connecting to KV-1000 ..... 6 - 8
6.2.4Connecting to KV-700 ..... 6 - 11
6.2.5Connection Diagram ..... 6 - 14
6.2.6GOT Side Settings ..... 6 - 19
6.2.7PLC Side Setting ..... 6 - 21
6.3Ethernet Connection ..... 6 - 24
6.3.1Connecting to KV-700/1000/3000/5000/5500 ..... 6 - 24
6.3.2GOT side settings ..... 6 - 25
6.3.3PLC side setting ..... 6 - 31
6.4Device Range that Can Be Set ..... 6 - 32
6.4.1KV-700/1000/3000/5000 ..... 6 - 33

7. CONNECTION TO KOYO EI PLC

7.1Connectable Model List ..... 7 - 2
7.2System Configuration ..... 7 - 3
7.2.1Connecting to SU-5E or SU-6B ..... 7 - 3
7.2.2Connecting to SU-5M or SU-6M ..... 7 - 5
7.2.3Connecting to DirectLOGIC 05 series ..... 7 - 8
7.2.4Connecting to DirectLOGIC 06 series ..... 7 - 10
7.2.5Connecting to D2-240, D2-250-1 or D2-260 ..... 7 - 13
7.2.6Connecting to PZ ..... 7 - 15
7.3Connection Diagram ..... 7 - 17
7.3.1RS-232 cable ..... 7 - 17
7.3.2RS-422 cable ..... 7 - 18
7.4GOT Side Settings ..... 7 - 23

7.4.1Setting communication interface (Communication settings) ..... 7 - 23
7.4.2Communication detail settings ..... 7 - 24
7.5PLC Side Setting ..... 7 - 25
7.5.1Connecting to SU-5E/6B ..... 7 - 26
7.5.2Connecting to SU-5M/6M ..... 7 - 27
7.5.3Connecting to DirectLOGIC 05 series or DirectLOGIC 06 series ..... 7 - 27
7.5.4Connecting to DirectLOGIC 205 series ..... 7 - 28
7.5.5Connecting to PZ Series ..... 7 - 28
7.5.6Connecting to U-01DM ..... 7 - 29
7.5.7Connecting to D0-DCM ..... 7 - 31
7.5.8Connecting to D2-DCM ..... 7 - 31
7.5.9Station No. settings ..... 7 - 32
7.6Device Range that Can Be Set ..... 7 - 33
7.6.1KOYO EI PLC (KOYO KOSTAC/DL) ..... 7 - 34
7.7Precautions ..... 7 - 35

8. CONNECTION TO JTEKT PLC

8.1Connectable Model List ..... 8 - 2
8.2System Configuration ..... 8 - 2
8.2.1Connecting to PC3JG, PC3JG-P, PC3JD or PC3JD-C ..... 8 - 2
8.2.2Connecting to PC3J or PC3JL ..... 8 - 4
8.2.3Connecting to PC2J, PC2JS or PC2JR ..... 8 - 6
8.2.4Connecting to PC2JC, PC2J16P or PC2J16PR ..... 8 - 8
8.3Connection Diagram ..... 8 - 10
8.3.1RS-232 cable ..... 8 - 10
8.3.2RS-422 cable ..... 8 - 11
8.4GOT Side Settings ..... 8 - 14
8.4.1Setting communication interface (Communication settings) ..... 8 - 14
8.4.2Communication detail settings ..... 8 - 15
8.5PLC Side Setting ..... 8 - 16
8.5.1Connecting to PC3JG, PC3JD, PC3JD-C, PC3JG-P, PC3J, PC3JL, PC2J, PC2JS or PC2JR ..... 8 - 16
8.5.2Connecting to PC2JC ..... 8 - 17
8.5.3Connecting to PC2J16P or PC2J16PR ..... 8 - 18
8.5.4RS-232/RS-422 interface converter setting ..... 8 - 19
8.5.5Link unit setting ..... 8 - 20
8.5.6Station number setting ..... 8 - 21
8.6Device Range that Can Be Set ..... 8 - 22
8.6.1JTEKT PLC (JTEKT TOYOPUC-PLC) ..... 8 - 23
8.7Precautions ..... 8 - 24

9. CONNECTION TO SHARP PLC

9.1Connectable Model List ..... 9 - 2
9.2System Configuration ..... 9 - 3
9.2.1Connecting to JW-21CU or JW-22CU ..... 9 - 3
9.2.2Connecting to JW-31CUH, JW-32CUH or JW-33CUH ..... 9 - 4
9.2.3Connecting to JW-50CUH, JW-70CUH, JW-100CUH or JW-100CU ..... 9 - 5
9.2.4Connecting to Z-512J ..... 9 - 6
9.3Connection Diagram ..... 9 - 7

9.3.1RS-232 cable ..... 9 - 7
9.3.2RS-422 cable ..... 9 - 8
9.4GOT Side Settings ..... 9 - 10
9.4.1Setting communication interface (Communication settings) ..... 9 - 10
9.4.2Communication detail settings ..... 9 - 11
9.5PLC Side Setting ..... 9 - 12
9.5.1Connecting to JW-22CU, JW-70CUH, JW-100CUH or JW-100CU ..... 9 - 13
9.5.2Connecting to JW-32CUH, JW-33CUH or Z-512J ..... 9 - 14
9.5.3Connecting to the link unit (JW-21CM) ..... 9 - 15
9.5.4Connecting to the link unit (JW-10CM or ZW-10CM) ..... 9 - 17
9.6Device Range that Can Be Set ..... 9 - 19
9.6.1SHARP PLC (SHARP JW) ..... 9 - 21

10. CONNECTION TO SHINKO TECHNOS INDICATING CONTROLLER

10.1Connectable Model List ..... 10 - 2
10.2System Configuration ..... 10 - 3
10.2.1Connecting to ACS-13A, JC, JCM-33A, JIR-301-M, PCD-300 Series, PC-900 Series (PC-955-[ ]/M,C5, PC-935-[ ]/M,C5) ..... 10 - 3
10.2.2Connecting to FCD-100, FCR-100, FCR-23A, FIR Series, PC-900 Series (PC-955[ ]/M,C, PC-935-[ ]/M,C) ..... 10 - 5
10.2.3When connecting to DCL-33A Series ..... 10 - 6
10.3Connection Diagram ..... 10 - 8
10.3.1RS-232 cable ..... 10 - 8
10.3.2RS-485 cable ..... 10 - 9
10.4GOT Side Settings ..... 10 - 15
10.4.1Setting communication interface (Communication settings) ..... 10 - 15
10.4.2Communication detail settings ..... 10 - 16
10.5Indicating Controller Side Setting ..... 10 - 17
10.5.1Connecting to ACS-13A, DCL- 33A, JC, JCM-33A, JIR-301- M, PCD-300 Series, PC-900 Series (PC-955-[ ]/M,C5, PC- 935-[ ]/M,C5) ..... 10 - 17
10.5.2Connecting to FCD-100, FCR- 100, FCR-23A, FIR Series, PC-900 Series (PC-955-[ ]/ M,C, PC-935-[ ]/M,C) ..... 10 - 17
10.5.3Connecting to communication converter (IF-400) ..... 10 - 18
10.5.4Station No. settings ..... 10 - 19
10.6Device Range that Can Be Set ..... 10 - 20
10.6.1SHINKO indicating controller (Shinko Technos Controller) ..... 10 - 21
10.7Precautions ..... 10 - 22

11. CONNECTION TO CHINO CONTROLLER

11.1Connectable Model List ..... 11 - 2
11.2System Configuration ..... 11 - 3
11.2.1Connecting to LT230, LT300, LT400, LT830, DZ1000, DZ2000, DB1000, DB2000 series ..... 11 - 3
11.2.2Connecting to KP1000, KP2000, AL3000, AH3000 series ..... 11 - 5
11.2.3Connecting to SE3000, JU, KE3000, LE5000 series ..... 11 - 7
11.2.4Connecting to GT120 Series ..... 11 - 9
11.3Connection Diagram ..... 11 - 11
11.3.1RS-232 cable ..... 11 - 11

11.3.2RS-422 cable ..... 11 - 12
11.3.3RS-485 cable ..... 11 - 15
11.4GOT Side Settings ..... 11 - 24
11.4.1Setting communication interface (Communication settings) ..... 11 - 24
11.4.2Communication detail settings ..... 11 - 25
11.5Controller Side Setting ..... 11 - 26
11.5.1Connecting to LT230, LT300 Series ..... 11 - 26
11.5.2Connecting to LT400, LT830 Series ..... 11 - 27
11.5.3Connecting to DZ1000, DZ2000 Series ..... 11 - 27
11.5.4Connecting to DB1000, DB2000 Series ..... 11 - 28
11.5.5Connecting to GT120 Series ..... 11 - 28
11.5.6Connecting to KP1000, KP2000 ..... 11 - 29
11.5.7Connecting to AL3000, AH3000 ..... 11 - 29
11.5.8Connecting to SE3000 ..... 11 - 30
11.5.9Connecting to JU ..... 11 - 31
11.5.10Connecting to KE3000 ..... 11 - 32
11.5.11Connecting to LE5000 ..... 11 - 33
11.5.12Connecting to converter SC8-10 ..... 11 - 34
11.5.13Station number setting ..... 11 - 35
11.6Device Range that Can Be Set ..... 11 - 37
11.6.1CHINO controller (CHINO Controllers) ..... 11 - 38
11.7Precautions ..... 11 - 39

12. CONNECTION TO TOSHIBA PLC

12.1Connectable Model List ..... 12 - 2
12.2Serial Connection ..... 12 - 3
12.2.1System configuration for connecting to PROSEC T series ..... 12 - 3
12.2.2System configuration for connecting to PROSEC V series ..... 12 - 4
12.2.3Connection Diagram ..... 12 - 5
12.2.4GOT Side Settings ..... 12 - 8
12.2.5PLC Side Setting ..... 12 - 10
12.3Ethernet Connection ..... 12 - 12
12.3.1System configuration for connecting to Unified Controller nv Series ..... 12 - 12
12.3.2GOT side settings ..... 12 - 13
12.3.3PLC side setting ..... 12 - 19
12.3.4Precautions ..... 12 - 20
12.4Device Range that Can Be Set ..... 12 - 21

13. CONNECTION TO TOSHIBA MACHINE PLC

13.1Connectable Model List ..... 13 - 2
13.2System Configuration ..... 13 - 3
13.2.1Connecting to TC3, TC5, TC6, TC8 ..... 13 - 3
13.2.2Connecting to TS2000, TS2100 ..... 13 - 4
13.3Connection Diagram ..... 13 - 5
13.3.1RS-232 cable ..... 13 - 5
13.3.2RS-485 cable ..... 13 - 7
13.4GOT Side Settings ..... 13 - 10
13.4.1Setting communication interface (Communication settings) ..... 13 - 10
13.4.2Communication detail settings ..... 13 - 11

13.5PLC Side Setting ..... 13 - 12
13.5.1Connecting to TC3, TC8 series ..... 13 - 12
13.5.2Connecting to TC5 series ..... 13 - 12
13.5.3Connecting to TC6 series ..... 13 - 12
13.5.4Connecting to TS2000, TS2100 ..... 13 - 12
13.6Device Range that Can Be Set ..... 13 - 13
13.6.1TOSHIBA MACHINE PLC (TOSHIBA MACHINE TCmini) ..... 13 - 14

14. CONNECTION TO PANASONIC SERVO AMPLIFIER

14.1Connectable Model List ..... 14 - 2
14.2System Configuration ..... 14 - 3
14.2.1Connecting to MINAS A4, MINAS A4F, MINAS A4L series ..... 14 - 3
14.2.2Connecting to MINAS A5 series ..... 14 - 4
14.3Connection Diagram ..... 14 - 5
14.3.1RS-232 cable ..... 14 - 5
14.3.2RS-485 cable ..... 14 - 6
14.3.3RS-232/RS-485 cable ..... 14 - 10
14.4GOT Side Settings ..... 14 - 11
14.4.1Setting communication interface (Communication settings) ..... 14 - 11
14.4.2Communication detail settings ..... 14 - 12
14.5Servo Amplifier Side Setting ..... 14 - 13
14.5.1Connecting to MINAS A4/A4F/A4L ..... 14 - 13
14.5.2Connecting to MINAS A5 ..... 14 - 13
14.5.3Station number setting ..... 14 - 14
14.6Device Range that Can Be Set ..... 14 - 15
14.6.1PANASONIC servo amplifier (PANASONIC MINAS-A4 Series) ..... 14 - 16
14.6.2PANASONIC servo amplifier (PANASONIC MINAS-A5 Series) ..... 14 - 17
14.7Precautions ..... 14 - 19

15. CONNECTION TO PANASONIC INDUSTRIAL DEVICES SUNX PLC

15.1Connectable Model List ..... 15 - 2
15.2System Configuration ..... 15 - 3
15.2.1Connecting to FP0-C16CT, FP0-C32CT, or FP0R ..... 15 - 3
15.2.2Connecting to FP1-C24C or FP1-C40C ..... 15 - 4
15.2.3Connecting to FP2 or FP2SH ..... 15 - 5
15.2.4Connecting to FP3 or FP5 ..... 15 - 7
15.2.5Connecting to FP10(S) ..... 15 - 9
15.2.6Connecting to FP10SH ..... 15 - 12
15.2.7Connecting to FP-M(C20TC) or FP-M(C32TC) ..... 15 - 14
15.2.8Connecting to FP ..... 15 - 16
15.2.9Connecting to FP-X ..... 15 - 18
15.2.10Connecting to FP7 ..... 15 - 21
15.3Connection Diagram ..... 15 - 26
15.3.1RS-232 cable ..... 15 - 26
15.3.2RS-422 cable ..... 15 - 33
15.3.3RS-485 cable ..... 15 - 35
15.4GOT Side Settings ..... 15 - 37
15.4.1Setting communication interface (Communication settings) ..... 15 - 37
15.4.2Communication detail settings ..... 15 - 38

15.5PLC Side Setting ..... 15 - 40
15.5.1Connecting to FP0/1/2/3/5, FP-M, FP-Σ, FP-X ..... 15 - 40
15.5.2Connecting to FP7 ..... 15 - 41
15.6Device Range that Can Be Set ..... 15 - 42
15.6.1Panasonic Industrial Devices SUNX PLC (Panasonic MEWNET-FP) ..... 15 - 43
15.6.2Panasonic Industrial Devices SUNX PLC (Panasonic FP-7) ..... 15 - 44
REVISIONS
WARRANTY

List of Manuals for GT Works3

For the manuals related to this product, install the manuals with the drawing software.
If you need a printed manual, consult your local Mitsubishi representative or branch office.

■1. List of Manuals for GT Designer3(GOT2000)

(1) Screen drawing software manuals

Manual name	Manual number (Model code)	Format
GT Works3 Version1 Installation Procedure Manual	-	PDF
GT Designer3 (GOT2000) Screen Design Manual	SH-081220ENG (1D7ML9)	PDF, e-Manual
GT Converter2 Version3 Operating Manual for GT Works3	SH-080862ENG (1D7MB2)	PDF
GOT2000 Series MES Interface Function Manual for GT Works3 Version1	SH-081228ENG	PDF

(2) Connection manuals

Manual name	Manual number (Model code)	Format
GOT2000 Series Connection Manual (Mitsubishi Products) For GT Works3 Version1	SH-081197ENG (1D7MJ8)	PDF
GOT2000 Series Connection Manual (Non-Mitsubishi Products 1) For GT Works3 Version1	SH-081198ENG	PDF
GOT2000 Series Connection Manual (Non-Mitsubishi Products 2) For GT Works3 Version1	SH-081199ENG	PDF
GOT2000 Series Connection Manual (Microcomputers, MODBUS/Fieldbus Products, Peripherals) For GT Works3 Version1	SH-081200ENG	PDF

(3) GT SoftGOT2000 manuals

Manual name	Manual number (Model code)	Format
GT SoftGOT2000 Version1 Operating Manual	SH-081201ENG	PDF

(4) GOT2000 manuals

Manual name	Manual number (Model code)	Format
GOT2000 Series User's Manual (Hardware)	SH-081194ENG (1D7MJ5)	PDF, e-Manual
GOT2000 Series User's Manual (Utility)	SH-081195ENG (1D7MJ6)	PDF, e-Manual
GOT2000 Series User's Manual (Monitor)	SH-081196ENG (1D7MJ7)	PDF, e-Manual

POINT

e-Manual

e-Manual refers to the Mitsubishi FA electronic book manuals that can be browsed using a dedicated tool.
e-Manual has the following features:

- Required information can be cross-searched in multiple manuals.
- Other manuals can be accessed from the links in the manual.
- Hardware specifications of each part can be found from the product figures.
- Pages that users often browse can be bookmarked.

Abbreviations, Generic Terms, the meaning of the icon

The following shows the abbreviations and generic terms used in Help.

■1. GOT

Abbreviations and generic terms				Description	Meaning of icon	
					Support	Not support
GOT2000 Series	GT27	GT27-X	GT2715-X	GT2715-XTBA, GT2715-XTBD	GT27	-
		GT27-S	GT2712-S	GT2712-STBA, GT2712-STWA, GT2712-STBD, GT2712-STWD		
			GT2710-S	GT2710-STBA, GT2710-STBD		
		GT27-V	GT2710-V	GT2710-VTBA, GT2710-VTWA, GT2710-VTBD, GT2710-VTWD		
		GT27-S	GT2708-S	GT2708-STBA, GT2708-STBD		
		GT27-V	GT2708-V	GT2708-VTBA, GT2708-VTBD		
			GT2705-V	GT2705-VTBD		
	GT25	GT25-S	GT2512-S	GT2512-STBA, GT2512-STBD	GT25	-
			GT2512F-S	GT2512F-STNA, GT2512F-STND		
		GT25-V	GT2510-V	GT2510-VTBA, GT2510-VTWA, GT2510-VTBD, GT2510-VTWD		
			GT2510F-V	GT2510F-VTNA, GT2510F-VTND		
			GT2508-V	GT2508-VTBA, GT2508-VTWA, GT2508-VTBD, GT2508-VTWD		
			GT2508F-V	GT2508F-VTNA, GT2508F-VTND		
	GT23	GT23-V	GT2310-V	GT2310-VTBA, GT2310-VTBD	GT23	-
			GT2308-V	GT2308-VTBA, GT2308-VTBD		
	GT21			GT21	GT21	-
		GT21-Q	GT2105-Q	GT2105-QTBDS GT2105-QMBDS	GT21 05Q	-
		GT21-R	GT2104-R	GT2104-RTBD	GT21 04R	-
		GT21-P	GT2104-P	GT2104-PMBD	GT21 03P 04P ET/R4	-
				GT2104-PMBDS	GT21 03P 04P R4	-
				GT2104-PMBDS2	GT21 03P 04P R2	-
				GT2104-PMBLS	GT21 03P 04P R4-5V	-
			GT2103-P	GT2103-PMBD	GT21 03P 04P ET/R4	-
				GT2103-PMBDS	GT21 03P 04P R4	-
				GT2103-PMBDS2	GT21 03P 04P R2	-
				GT2103-PMBLS	GT21 03P 04P R4-5V	-
	GT SoftGOT2000			GT SoftGOT2000 Version1	Soft GOT 2000	-
GOT1000 Series				GOT1000 Series	-	
GOT900 Series				GOT-A900 Series, GOT-F900 Series	-	
GOT800 Series				GOT-800 Series	-	

■2. Communication unit

Abbreviations and generic terms	Description
Bus connection unit	GT15-QBUS, GT15-QBUS2, GT15-ABUS, GT15-ABUS2, GT15-75QBUSL, GT15-75QBUS2L, GT15-75ABUSL, GT15-75ABUS2L
Serial communication unit	GT15-RS2-9P, GT15-RS4-9S, GT15-RS4-TE
MELSECNET/H communication unit	GT15-J71LP23-25, GT15-J71BR13
CC-Link IE Controller Network communication unit	GT15-J71GP23-SX
CC-Link IE Field Network communication unit	GT15-J71GF13-T2
CC-Link communication unit	GT15-J61BT13
Wireless LAN communication unit	GT25-WLAN
Serial multi-drop connection unit	GT01-RS4-M
Connection conversion adapter	GT10-9PT5S
Field network adapter unit	GT25-FNADP
Ethernet communication unit	GT25-J71E71-100

■3. Option unit

Abbreviations and generic terms		Description
Printer unit		GT15-PRN
Video/RGB unit	Video input unit	GT27-V4-Z (A set of GT16M-V4-Z and GT27-IF1000)
	RGB input unit	GT27-R2, GT27-R2-Z (A set of GT16M-R2-Z and GT27-IF1000)
	Video/RGB input unit	GT27-V4R1-Z (A set of GT16M-V4R1-Z and GT27-IF1000)
	RGB output unit	GT27-ROUT, GT27-ROUT-Z (A set of GT16M-ROUT-Z and GT27-IF1000)
Multimedia unit		GT27-MMR-Z (A set of GT16M-MMR-Z and GT27-IF1000)
Video signal conversion unit		GT27-IF1000
External I/O unit		GT15-DIO, GT15-DIOR
Sound output unit		GT15-SOUT

■4. Option

Abbreviations and generic terms	Description
SD card	NZ1MEM-2GBSD, NZ1MEM-4GBSD, NZ1MEM-8GBSD, NZ1MEM-16GBSD, L1MEM-2GBSD, L1MEM-4GBSD
Battery	GT11-50BAT
Protective sheet	GT27-15PSGC, GT25-12PSGC, GT25-10PSGC, GT25-08PSGC, GT25-05PSGC, GT21-05PSGC, GT21-04RPSGC-UC, GT21-03PSGC-UC, GT21-04PSGC-UC, GT27-15PSCC, GT25-12PSCC, GT25-10PSCC, GT25-08PSCC, GT25-12PSCC-UC, GT25-10PSCC-UC, GT25-08PSCC-UC, GT25-05PSCC, GT21-05PSCC, GT21-04RPSCC-UC, GT21-04PSCC-UC, GT21-03PSCC-UC
Environmental protection sheet	GT25F-12ESGS, GT25F-10ESGS, GT25F-08ESGS
Protective cover for oil	GT20-15PCO, GT20-12PCO, GT20-10PCO, GT20-08PCO, GT25-05PCO, GT21-04RPCO, GT10-30PCO, GT10-20PCO, GT05-50PCO
USB environmental protection cover	GT25-UCOV, GT25-05UCOV
Stand	GT15-90STAND, GT15-80STAND, GT15-70STAND, GT15-60STAND
Attachment	GT15-70ATT-98, GT15-70ATT-87, GT15-60ATT-97, GT15-60ATT-96, GT15-60ATT-87, GT15-60ATT-77

■5. Software

(1) Software related to GOT

Abbreviations and generic terms	Description
GT Works3	SW1DND-GTWK3-J, SW1DND-GTWK3-E, SW1DND-GTWK3-C
GT Designer3 Version1	Screen drawing software GT Designer3 for GOT2000/GOT1000 series
GT Designer3	Screen drawing software for GOT2000 series included in GT Works3
GT Designer3 (GOT2000)	
GT Designer3 (GOT1000)	Screen drawing software for GOT1000 series included in GT Works3
GT Simulator3	Screen simulator GT Simulator3 for GOT2000/GOT1000/GOT900 series
GT SoftGOT2000	Monitoring software GT SoftGOT2000 series
GT Converter2	Data conversion software GT Converter2 for GOT1000/GOT900 series
GT Designer2 Classic	Screen drawing software GT Designer2 Classic for GOT900 series
GT Designer2	Screen drawing software GT Designer2 for GOT1000/GOT900 series
DU/WIN	Screen drawing software FX-PCS-DU/WIN for GOT-F900 series

(2) Software related to iQ Works

Abbreviations and generic terms	Description
iQ Works	Abbreviation of iQ Platform compatible engineering environment MELSOFT iQ Works
MELSOFT Navigator	Generic term for integrated development environment software included in the SW DNC-IQWK (iQ Platform compatible engineering environment MELSOFT iQ Works) (□ indicates a version.)
MELSOFT iQ AppPortal	SW□DND-IQAPL-M type integrated application management software (□ indicates a version.)

(3) Other software

Abbreviations and generic terms		Description
GX Works3		SW□DND-GXW3-E (-EA) type programmable controller engineering software (□ indicates a version.)
GX Works2		SW□DNC-GXW2-□ type programmable controller engineering software (□ indicates a version.)
Controller simulator	GX Simulator3	Simulation function of GX Works3
	GX Simulator2	Simulation function of GX Works2
	GX Simulator	SW□D5C-LLT-E (-EV) type ladder logic test tool function software package (SW5D5C-LLT (-V) or later versions) (□ indicates a version.)
GX Developer		SW□D5C-GPPW-E (-EV)/SW□D5F-GPPW (-V) type software package (□ indicates a version.)
GX LogViewer		SW□DNN-VIEWER-E type software package (□ indicates a version.)
PX Developer		SW□D5C-FBDQ-E type FBD software package for process control (□ indicates a version.)
MT Works2		Motion controller engineering environment MELSOFT MT Works2 (SW□DND-MTW2-E) (□ indicates a version.)
MT Developer		SW□RNC-GSV type integrated start-up support software for motion controller Q series (□ indicates a version.)
CW Configurator		C Controller module configuration and monitor tool (SW1DND-RCCPU-E) (□ indicates a version.)
MR Configurator2		SW□DNC-MRC2-E type servo configuration software (□ indicates a version.)
MR Configurator		MRZJW□-SETUP type servo configuration software (□ indicates a version.)
FR Configurator		Inverter setup software (FR-SW□-SETUP-WE) (□ indicates a version.)
NC Configurator2		CNC parameter setting support tool (FCSB1221)
NC Configurator		CNC parameter setting support tool
FX Configurator-FP		Parameter setting, monitoring, and testing software packages for FX3U-20SSC-H (SW□D5CFXSSCE) (□ indicates a version.)
FX3U-ENET-L Configuration tool		FX3U-ENET-L type Ethernet module setting software (SW1D5-FXENETL-E)
RT ToolBox2		Robot program creation software (3D-11C-WINE)
MX Component		MX Component Version□ (SW□D5C-ACT-E, SW□D5C-ACT-EA) (□ indicates a version.)
MX Sheet		MX Sheet Version□ (SW□D5C-SHEET-E, SW□D5C-SHEET-EA) (□ indicates a version.)
CPU Module Logging Configuration Tool		CPU module logging configuration tool (SW1DNN-LLUTL-E)

■6. License key (for GT SoftGOT2000)

Abbreviations and generic terms	Description
License key	GT27-SGTKEY-U

■7. Others

Abbreviations and generic terms	Description
IAI	IAI Corporation
AZBIL	Azbil Corporation
OMRON	OMRON Corporation
KEYENCE	KEYENCE CORPORATION
KOYO EI	KOYO ELECTRONICS INDUSTRIES CO., LTD.
JTEKT	JTEKT Corporation
SHARP	Sharp Manufacturing Systems Corporation
SHINKO	Shinko Technos Co., Ltd.
CHINO	CHINO CORPORATION
TOSHIBA	TOSHIBA CORPORATION
TOSHIBA MACHINE	TOSHIBA MACHINE CO., LTD.
PANASONIC	Panasonic Corporation
PANASONIC IDS	Panasonic Industrial Devices SUNX Co., Ltd.
HITACHI IES	Hitachi Industrial Equipment Systems Co., Ltd.
HITACHI	Hitachi, Ltd.
FUJI	FUJI ELECTRIC CO., LTD.
YASKAWA	YASKAWA Electric Corporation
YOKOGAWA	Yokogawa Electric Corporation
RKC	RKC INSTRUMENT INC.
ALLEN-BRADLEY	Allen-Bradley products manufactured by Rockwell Automation, Inc.
CLPA	CC-Link Partner Association
GE	GE Intelligent Platforms, Inc.
HMS	HMS Industrial Networks
LS IS	LS Industrial Systems Co., Ltd.
MITSUBISHI INDIA	Mitsubishi Electric India Pvt. Ltd.
ODVA	Open DeviceNet Vendor Association, Inc.
SCHNEIDER	Schneider Electric SA
SICK	SICK AG
SIEMENS	Siemens AG
PLC	Programmable controller manufactured by each corporation
Control equipment	Control equipment manufactured by each corporation
Temperature controller	Temperature controller manufactured by each corporation
Indicating controller	Indicating controller manufactured by each corporation
Controller	Controller manufactured by each corporation

1. PREPARATORY PROCEDURES FOR MONITORING

1.1 Setting the Communication Interface . . . . . 1 - 3
1.2 Writing the Project Data onto the GOT . . . . . 1 - 15
1.3 Option Devices for the Respective Connection. . . . . 1 - 17
1.4 Connection Cables for the Respective Connection . . . . . 1 - 23
1.5 Verifying GOT Recognizes Connected Equipment . . . . . 1 - 31
1.6 Checking for Normal Monitoring. . . . . 1 - 33

1. PREPARATORY PROCEDURES FOR MONITORING

The following shows the procedures to be taken before monitoring and corresponding reference sections.

Step 1. Setting the communication interface
Determine the connection type and channel No. to be used, and perform the communication setting.

➠ 1.1Setting the Communication Interface

➠ Each chapter GOT Side Settings

Step 2. Writing the project data and OS
Write the standard monitor OS, communication driver, extended function OS, project data and communication settings onto the GOT.

➠ 1.2.1Writing the project data and OS onto the GOT

Step 3. Verifying the project data and OS
Verify the standard monitor OS, communication driver, extended function OS, project data and communication settings are properly written onto the GOT.

➠ 1.2.2Checking the project data and OS writing on GOT

Step 4. Attaching the communication unit and connecting the cable
Mount the optional equipment and prepare/connect the connection cable according to the connection type.

➠ 1.3Option Devices for the Respective Connection

➠ 1.4Connection Cables for the Respective Connection

➠ Each chapter System Configuration

➠ Each chapter Connection Diagram

Step 5. Verifying GOT recognizes connected equipment
Verify the GOT recognizes controllers on [Communication Settings] of the Utility.

➠ 1.5Verifying GOT Recognizes Connected Equipment

Step 6. Verifying the GOT is monitoring normally
Verify the GOT is monitoring normally using Utility, Developer, etc.

➠ 1.6Checking for Normal Monitoring

1.1 Setting the Communication Interface

Set the communication interface of GOT and the connected equipment.
When using the GOT at the first time, make sure to set the channel of communication interface and the communication driver before writing to GOT.
Set the communication interface of the GOT at [Controller Setting] and [I/F Communication Setting] in GT Designer3.

1.1.1 Setting connected equipment (Channel setting)

Set the channel of the equipment connected to the GOT.

■1. Setting

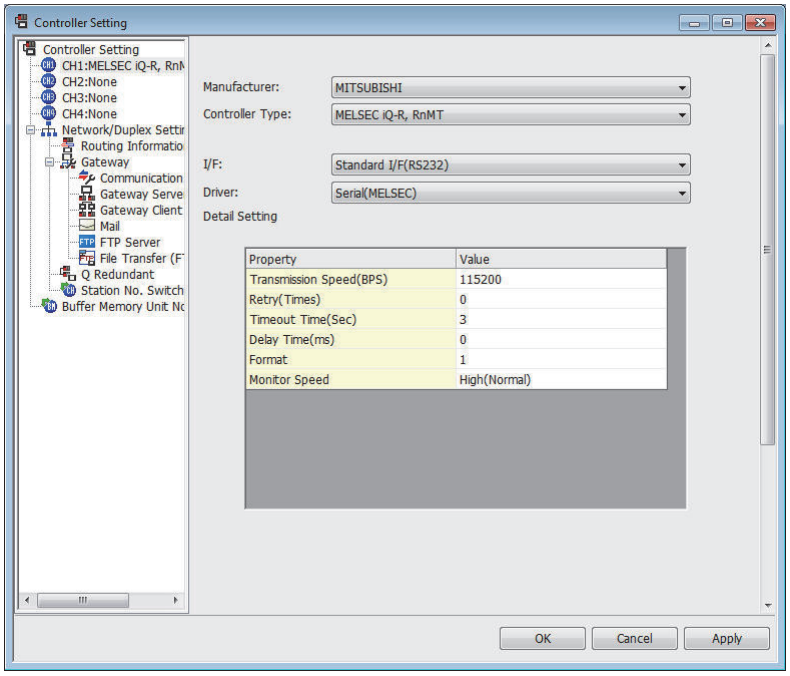

Step 1. Select [Common] → [Controller Setting] from the menu.

Step 2. The Controller Setting dialog box appears. Select the channel No. to be used from the list menu.

Step 3. Refer to the following explanations for the setting.

POINT

Channel No.2 to No.4
Use the channel No.2 to No.4 when using the Multi-channel function.
For details of the Multi-channel function, refer to the following.

➠ Mitsubishi Products 19. MULTI-CHANNEL FUNCTION

■2. Setting item

This section describes the setting items of the Manufacturer, Controller Type, Driver and I/F.
When using the channel No.2 to No.4, put a check mark at [Use CH*].

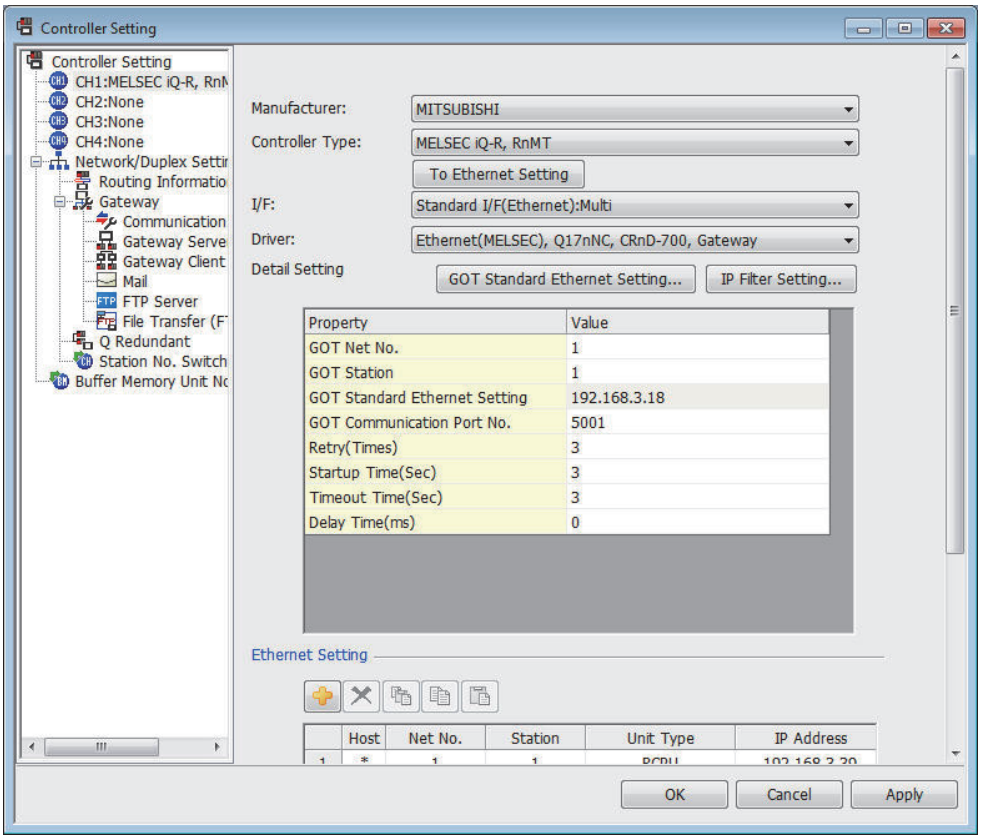

Item	Description
Use CH*	Select this item when setting the channel No.2 to No.4.
Manufacturer	Select the manufacturer of the equipment to be connected to the GOT.
Type	Select the type of the equipment to be connected to the GOT. For the settings, refer to the following. ➠ (2)Setting [Controller Type]
I/F	Select the interface of the GOT to which the equipment is connected. For the settings, refer to the following. ➠ (3)Setting [I/F]
Driver	Select the communication driver to be written to the GOT. For the settings, refer to the following. ➠ (1)Setting [Driver]
Detail Setting	Make settings for the transmission speed and data length of the communication driver. ➠ Refer to each chapter of the equipment to be connected to the GOT.

(1) Setting [Driver]

The displayed items for a driver differ according to the settings [Manufacturer], [Controller Type] and [I/F].
When the driver to be set is not displayed, confirm if [Manufacturer], [Controller Type] and [I/F] are correct.
For the settings, refer to the following.

➠ [Setting the communication interface] section in each chapter

(2) Setting [Controller Type]

The types for the selection differs depending on the PLC to be used.
For the settings, refer to the following.

Type	Model name
IAI X-SEL CONTROLLER	XSEL-J
	XSEL-K
	XSEL-KE
	XSEL-KT
	XSEL-KET
	XSEL-P
	XSEL-Q
	XSEL-JX
	XSEL-KX
	XSEL-KTX
	XSEL-PX
	XSEL-QX
	SSEL
	ASEL
	PSEL
IAI ROBO CYLINDER	PCON-C
	PCON-CG
	PCON-CF
	PCON-CY
	PCON-SE
	PCON-PL
	PCON-CA
	PCON-PO
	ACON-C
	ACON-CG
	ACON-CY
	ACON-SE
	ACON-PL
	ACON-PO
	SCON-C
	SCON-CA
	ERC2

Type	Model name
AZBIL SDC/DMC Series	DMC10
	DMC50
	SDC15
	SDC25
	SDC26
	SDC35
	SDC36
	SDC20
	SDC21
	SDC30
	SDC31
	SDC40A
	SDC40B
	SDC40G
	SDC45
	SDC46
	CMS
	CMF015
	CMF050
	CML
	MQV
	MPC
	MVF
	PBC201-VN2
	AUR350C
	AUR450C
	RX
	CMC10B
	AHC2001

Type	Model name
OMRON SYSMAC	CPM1
	CPM1A
	CPM2A
	CPM2C
	CQM1
	CQM1H
	CJ1H
	CJ1G
	CJ1M
	CP1H
	CP1L
	CP1E
	C200HS
	C200H
	C200HX
	C200HG
	C200HE
	CS1H
	CS1G
	CS1D
	C1000H
	C2000H
	CV500
	CV1000
	CV2000
	CVM1
OMRON SYSMAC CS/CJ	CS1H
	CS1G
	CS1D
	CJ1H
	CJ1G
	CJ1M
	CJ2H
	CJ2M
OMRON THERMAC/INPANEL NEO	E5AN
	E5EN
	E5CN
	E5GN
	E5ZN
KEYENCE KV-700/1000/3000/5000	KV-700
	KV-1000
	KV-3000
	KV-5000
	KV-5500

Type	Model name
SHARP JW	JW-21CU
	JW-31CUH
	JW-50CUH
	JW-22CU
	JW-32CUH
	JW-33CUH
	JW-70CUH
	JW-100CUH
	JW-100CU
	Z-512J
TOSHIBA MACHINE Tcmini	TC3-01
	TC3-02
	TC5-02
	TC5-03
	TC6-00
	TC8-00
	TS2000
	TS2100
KOYO KOSTAC/DL	SU-5E
	SU-6B
	SU-5M
	SU-6M
	PZ3
	D2-240
	D2-250-1
	D2-260
	D0-05AA
	D0-05AD
	D0-05AR
	D0-05DA
	D0-05DD
	D0-05DD-D
	D0-05DR
	D0-05DR-D
	D0-06DD1
	D0-06DD2
	D0-06DR
	D0-06DA
	D0-06AR
	D0-06AA
	D0-06DD1-D
	D0-06DD2-D
	D0-06DR-D

Type	Model name
JTEKT TOYOPUC-PC Series	PC3JG-P-CPU
	PC3JG-CPU
	PC3J-CPU
	PC3JL-CPU
	PC2JC-CPU
	PC2J16P-CPU
	PC2J16PR-CPU
	PC2J-CPU
	PC2JS-CPU
	PC2JR-CPU
CHINO Controllers	LT350
	LT370
	LT450
	LT470
	DZ1000
	DZ2000
	LT230
	LT830
	DB1000
	DB2000
	GT120
TOSHIBA PROSEC T/V Series	T2 (PU224)
	T3
	T3H
	T2E
	T2N
	model 2000(S2)
	model 2000(S2T)
	model 2000(S2E)
	model 3000 (S3)
TOSHIBA Unified Controller nv Series	Controller type1 PU811
PANASONIC MINAS-A4 Series	MINAS A4
	MINAS A4F
	MINAS A4L

Type	Model name
PANASONIC INDUSTRIAL DEVICES SUNX MEWNET-FP Series	FP0-C16CT
	FP0-C32CT
	FP0R
	FP1-C24C
	FP1-C40C
	FP2
	FP2SH
	FP3
	FP5
	FP10(S)
	FP10SH
	FP-M(C20TC)
	FP-M(C32TC)
	FP-∑
	FP-X
Shinko Technos Controller Series	ACS-13A□/□,□,C5
	JCS-33A-□/□□,C5
	JCR-33A-□/□□,C5
	JCD-33A-□/□□,C5
	JCM-33A□/□,□C5
	JIR-301-M□,C5
	PCD-33A-□/M,C5
	PC935-□/M,C5
	PC955-□/M,C5
	PC935-□/M,C
	PC955-□/M,C
	FCD-13A-□/M,C
	FCD-15A-□/M,C
	FCR-13A-□/M,C
	FCR-15A-□/M,C
	FCR-23A-□/M,C
	FIR-201-M,C
	DCL-33A-□/M,□,C5

(3) Setting [I/F]

The interface differs depending on the GOT to be used.
Set the I/F according to the connection and the position of communication unit to be mounted onto the GOT.

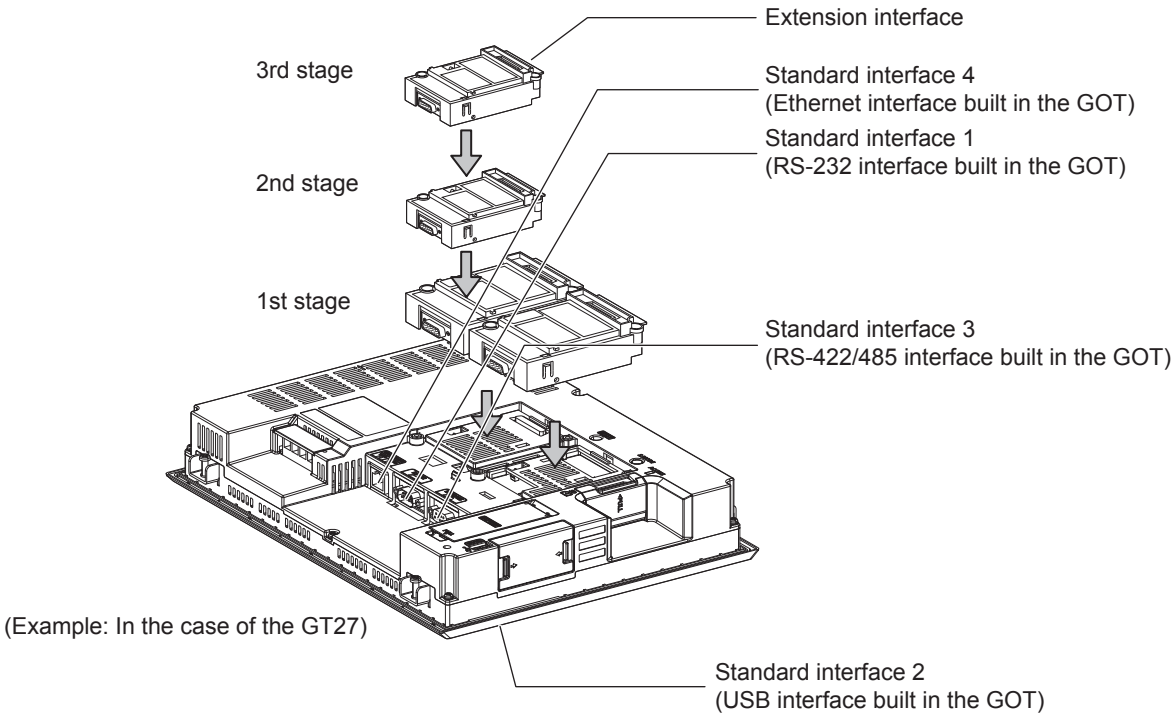

(Example: In the case of the GT27)

1.1.2 I/F communication setting

This function displays the list of the GOT communication interfaces.
Set the channel and the communication driver to the interface to be used.

■1. Setting

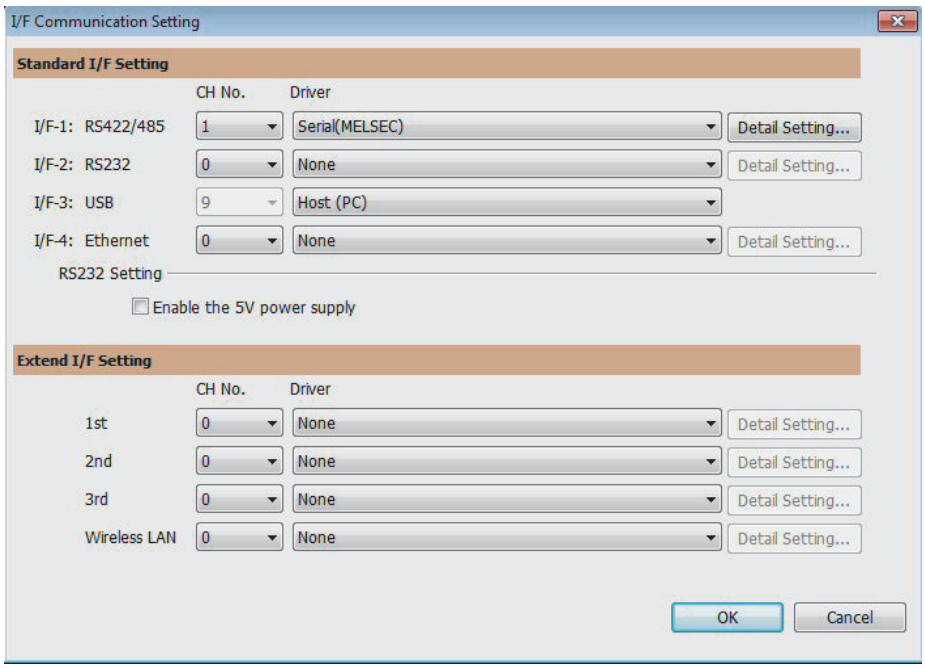

Step 1. Select [Common] → [I/F Communication Setting] from the menu.

Step 2. The I/F Communication Setting dialog box appears. Make the settings with reference to the following explanation.

■2. Setting item

The following describes the setting items for the standard I/F setting and extension I/F setting.

When the GT21 series is selected in the GOT type setting

I/F-1: RS422/485/232(Side)
I/F-2: RS232(Back)

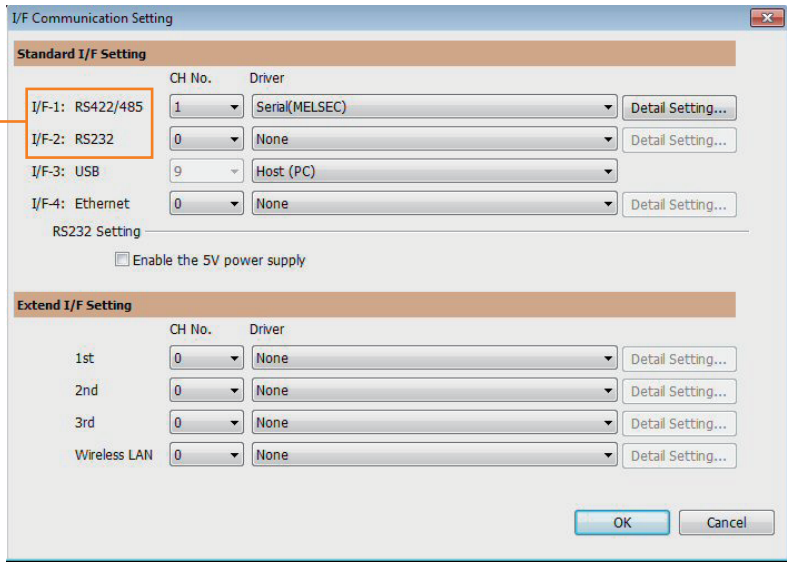

Item	Description
Standard I/F setting	Set channel No. and drivers to the GOT standard interfaces.
CH No.	Set the CH No. according to the intended purpose. 0: Not used 1 to 4: Used for connecting a controller of channel No. 1 to 4 set in Setting connected equipment (Channel setting) 5 to 8: Used for barcode function, RFID function, remote personal computer operation function (serial) 9: Used for connecting Host (PC), Ethernet download A: Used for the report function (with a serial printer), hard copy function (with a serial printer), remote personal computer operation function (Ethernet), VNC server function, gateway function, and MES interface function. Multi: Used for multi-channel Ethernet connection
I/F	The communication type of the GOT standard interface is displayed.
Driver	Set the driver for the device to be connected. • None • Host (Personal computer) • Each communication driver for connected devices
Detail Setting	Make settings for the transmission speed and data length of the communication driver. ➠ Refer to each chapter of the equipment to be connected to the GOT.
RS232 Setting	To validate the 5V power supply function in RS232, mark the [Enable the 5V power supply] checkbox. The RS232 setting is invalid when the CH No. of [I/F-1: RS232] is [9]. GT21 is not supported.
Extension I/F setting	Set the communication unit attached to the extension interface of the GOT. GT21 is not supported.
CH No.	Set the CH No. according to the intended purpose. The number of channels differs depending on the GOT to be used. 0: Not used 1 to 4: Used for connecting a controller of channel No. 1 to 4 set in Setting connected equipment (Channel setting) 5 to 8: Used for barcode function, RFID function, remote personal computer operation (serial) A: Used for the video/RGB display function, multimedia function, external I/O function, operation panel function, RGB output function, report function, hard copy function (with a printer), sound output function, gateway function, MES interface function, and wireless LAN connection.

POINT

Channel No., drivers, [RS232 Setting]

(1) Channel No.2 to No.4

Use the channel No.2 to No.4 when using the Multi-channel function.
For details of the Multi-channel function, refer to the following.

➠ Mitsubishi Products 19. MULTI-CHANNEL FUNCTION

(2) Drivers

The displayed items for a driver differ according to the settings [Manufacturer], [Controller Type] and [I/F].
When the driver to be set is not displayed, confirm if [Manufacturer], [Controller Type] and [I/F] are correct.

➠ [Setting the communication interface] section in each chapter

1.1.3 Precautions

■1. Precautions for changing model

(1) When devices that cannot be converted are included.

When setting of [Manufacturer] or [Controller Type] is changed, GT Designer3 displays the device that cannot be converted (no corresponding device type, or excessive setting ranges) as [??]. In this case, set the device again.

(2) When the changed Manufacturer or Controller Type does not correspond to the network.

The network will be set to the host station.

(3) When the Manufacturer or Controller Type is changed to [None]

The GT Designer3 displays the device of the changed channel No. as [??]. In this case, set the device again.
Since the channel No. is retained, the objects can be reused in other channel No. in a batch by using the [Device Bach Edit], [CH No. Batch Edit] or [Device List].

1.2 Writing the Project Data onto the GOT

Write the package data onto the GOT.
For details on writing to GOT, refer to the following manual.

➠ GT Designer3 (GOT2000) Screen Design Manual

1.2.1 Writing the project data and OS onto the GOT

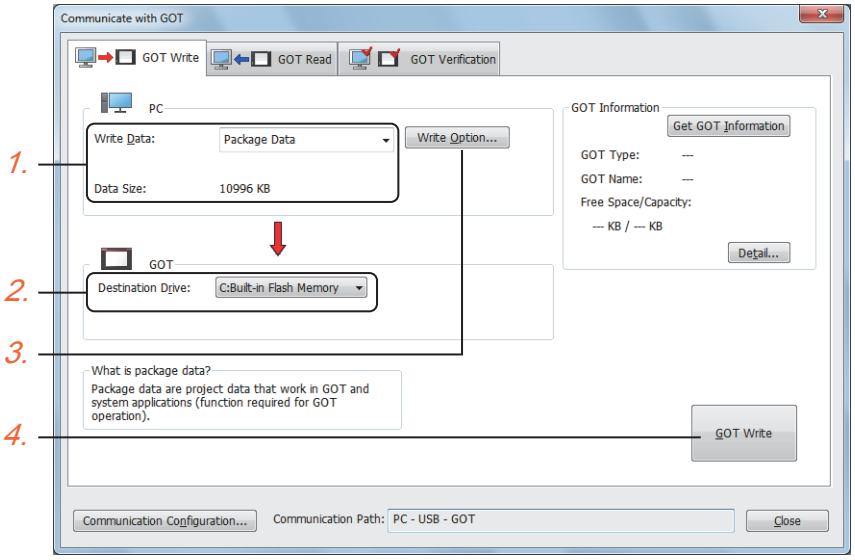

Step 1. Select [Package Data] for [Write Data].
The capacity of the transfer data is displayed in [Data Size]. Check that the destination drive has the sufficient available space.

Step 2. Select [Destination Drive].

Step 3. When the system application or the special data is required to be added to the package data or deleted, click the [Write Option] button and configure the setting in the [Write Option] dialog.

Step 4. Click the [GOT Write] button.

Step 5. The package data is written to the GOT.

1.2.2 Checking the project data and OS writing on GOT

Confirm if the package data is properly written onto the GOT by reading from GOT using GT Designer3.
For reading from the GOT, refer to the following manual.

➠ GT Designer3 (GOT2000) Screen Design Manual

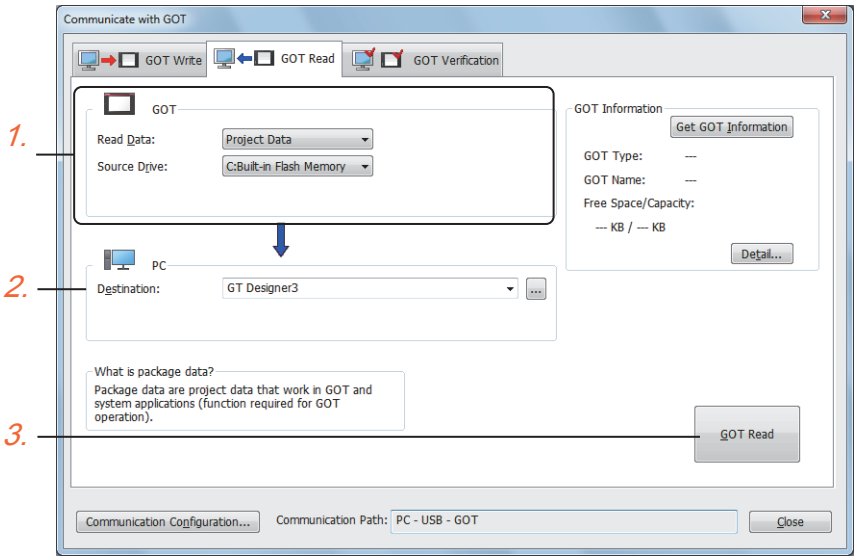

Step 1. Set [GOT Side] as follows.
- Select [Project Data] or [Package Data] for [Read Data].
- Select the drive where the project data or the package data is stored for [Source Drive].

Step 2. Set [PC Side].
Set the reading destination of the project for [Destination].
To read the project data to GT Designer3, select [GT Designer3].
(When [Read Data] is [Package Data], the project data cannot be read to GT Designer3.)
To read the project data as a file, click the [...] button to set the saving format and the saving destination of the file.

Step 3. Click the [GOT Read] button.

Step 4. The project is read.

Step 5. Confirm that the project data is written correctly onto the GOT.

1.3 Option Devices for the Respective Connection

The following shows the option devices to connect in the respective connection type.
For the specifications, usage and connecting procedure on option devices, refer to the respective device manual.

1.3.1 Communication module

Product name	Model	Specifications
Bus connection unit	GT15-QBUS	For QCPU (Q mode), motion controller CPU (Q series) Bus connection (1ch) unit standard model
	GT15-QBUS2	For QCPU (Q mode), motion controller CPU (Q series) Bus connection (2ch) unit standard model
	GT15-ABUS	For A/QnACPU, motion controller CPU (A series) Bus connection (1ch) unit standard model
	GT15-ABUS2	For A/QnACPU, motion controller CPU (A series) Bus connection (2ch) unit standard model
	GT15-75QBUSL	For QCPU (Q mode), motion controller CPU (Q series) Bus connection (1ch) unit slim model
	GT15-75QBUS2L	For QCPU (Q mode), motion controller CPU (Q series) Bus connection (2ch) unit slim model
	GT15-75ABUSL	For A/QnACPU, motion controller CPU (A series) Bus connection (1ch) unit slim model
	GT15-75ABUS2L	For A/QnACPU, motion controller CPU (A series) Bus connection (1ch) unit slim model
Serial communication unit	GT15-RS2-9P	RS-232 serial communication unit (D-sub 9-pin (male))
	GT15-RS4-9S	RS-422/485 serial communication unit (D-sub 9-pin (female))
	GT15-RS4-TE	RS-422/485 serial communication unit (terminal block)
MELSECNET/H communication unit	GT15-J71LP23-25	Optical loop unit
	GT15-J71BR13	Coaxial bus unit
MELSECNET/10 communication unit	GT15-J71LP23-25	Optical loop unit (MELSECNET/H communication unit used in the MNET/10 mode)
	GT15-J71BR13	Coaxial bus unit (MELSECNET/H communication unit used in the MNET/10 mode)
CC-Link IE Controller Network communication unit	GT15-J71GP23-SX	Optical loop unit
CC-Link IE Field Network communication unit	GT15-J71GF13-T2	CC-Link IE Field Network (1000BASE-T) unit
CC-Link communication unit	GT15-J61BT13	Intelligent device station unit CC-LINK Ver. 2 compatible
Ethernet communication unit	GT25-J71E71-100	Ethernet (100Base-TX) unit
Wireless LAN communication unit*1	GT25-WLAN	• Used for the connection to the IEEE802.11b/g/n compliant, built-in antenna, access point (master unit)*2, station (slave unit), personal computers, tablets, and smartphones. • Compliance with Japan Radio Law*3, FCC*4, R&TTE*4, SRRC*5, KC*5

*1 Data transfer in wireless LAN communication may not be as stable as that in cable communication.
A packet loss may occur depending on the surrounding environment and the installation location.
Be sure to perform a confirmation of operation before using this product.

*2 When a wireless LAN configuration of GT Designer3 the [Operation Mode] is set to [access point], the maximum connection number is a five (recommended).

*3 The product with hardware version A or later (manufactured in December 2013) complies with the regulation.
The product with hardware version A can be used only in Japan.

*4 The product with hardware version B or later (manufactured from October 2014) complies with the regulation.
The product with hardware version B or later can be used in Japan, the United States, the EU member states, Switzerland, Norway, Iceland, and Liechtenstein.

*5 The product with hardware version D or later (manufactured from May 2016) complies with the regulation.
The product with hardware version D or later can be used in Japan, the United States, the EU member states, Switzerland, Norway, Iceland, Liechtenstein, China (excluding Hong Kong, Macao, and Taiwan), and South Korea.

1.3.2 Option unit

Product name	Model	Specifications
Multimedia unit	GT27-MMR-Z	For video input signal (NTSC/PAL) 1 ch, playing movie
Video input unit	GT27-V4-Z	For video input signal (NTSC/PAL) 4 ch
RGB input unit	GT27-R2 GT27-R2-Z	For analog RGB input signal 2 ch
Video/RGB input unit	GT27-V4R1-Z	For video input signal (NTSC/PAL) 4 ch, for analog RGB mixed input signal 1 ch
RGB output unit	GT27-ROUT GT27-ROUT-Z	For analog RGB output signal 1 ch
Sound output unit	GT15-SOUT	For sound output
External I/O unit	GT15-DIOR	For the connection to external I/O device or operation panel (Negative Common Input/ Source Type Output)
	GT15-DIO	For the connection to external I/O device or operation panel (Positive Common Input/ Sink Type Output)

1.3.3 Conversion cables

Product name	Model	Specifications
RS-485 terminal block conversion modules	FA-LTBGT2R4CBL05	RS-422/485 (Connector) ⟷ RS-485 (Terminal block) Supplied connection cable dedicated for the conversion unit
	FA-LTBGT2R4CBL10	
	FA-LTBGT2R4CBL20	

1.3.4 Serial Multi-Drop Connection Unit

Product name	Model	Specifications
Serial multi-drop connection unit	GT01-RS4-M	GOT multi-drop connection module ➠ Mitsubishi Products 18. GOT MULTI-DROP CONNECTION

1.3.5 Field Network Adapter Unit

Product name	Model	Specifications
Field network adapter unit	GT25-FNADP	The field network adapter unit can be used with the following field networks by using the Anybus CompactCom M40 network communication module manufactured by HMS (hereinafter referred to as the communication module). Field networks: PROFIBUS DP-V1 DeviceNet How to incorporate the communication module to the field network adapter unit, and the details of the product name of the communication module, refer to the following manual. ➠ GOT2000 Series Field Network Adapter Unit User's Manual

1.3.6 Installing a unit on another unit (Checking the unit installation position)

This section describes the precautions for installing units on another unit.
For the installation method of each unit, refer to the User's Manual for the communication unit and option unit you are using.
For the method for installing a unit on another unit, refer to the following.

■1. When using a bus connection unit

The installation position varies depending on the bus connection unit to be used.

(1) Wide bus units (GT15-75QBUS(2)L, GT15-75ABUS(2)L, GT15-QBUS2, GT15-ABUS2)

Install a bus connection unit in the 1st stage of the extension interface.
If a bus connection unit is installed in the 2nd stage or above, the unit cannot be used.
Example: Installing a bus connection unit and serial communication units

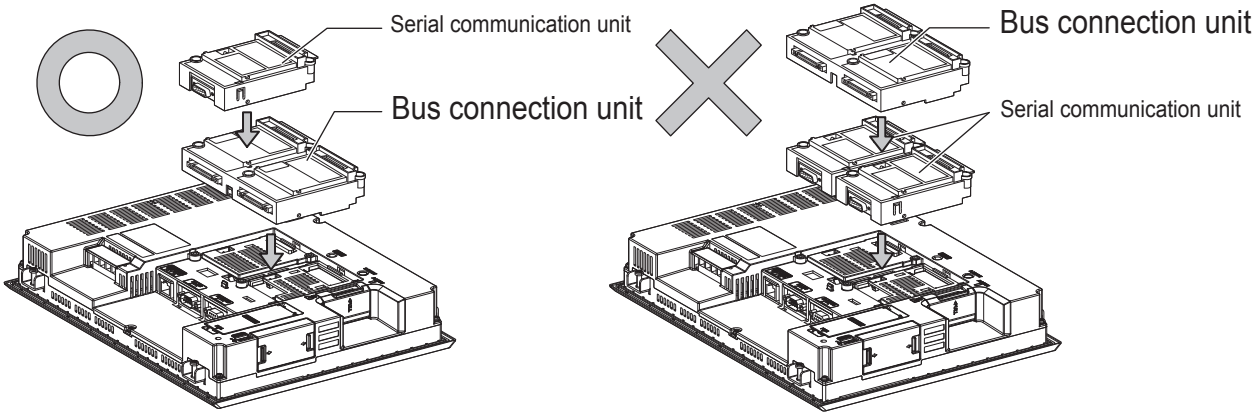

(2) Standard size bus connection unit (GT15-QBUS and GT15-ABUS)

A bus connection unit can be installed in any position (1st to 3rd stage) of the extension interface.
Example: Installing a bus connection unit and serial communication units

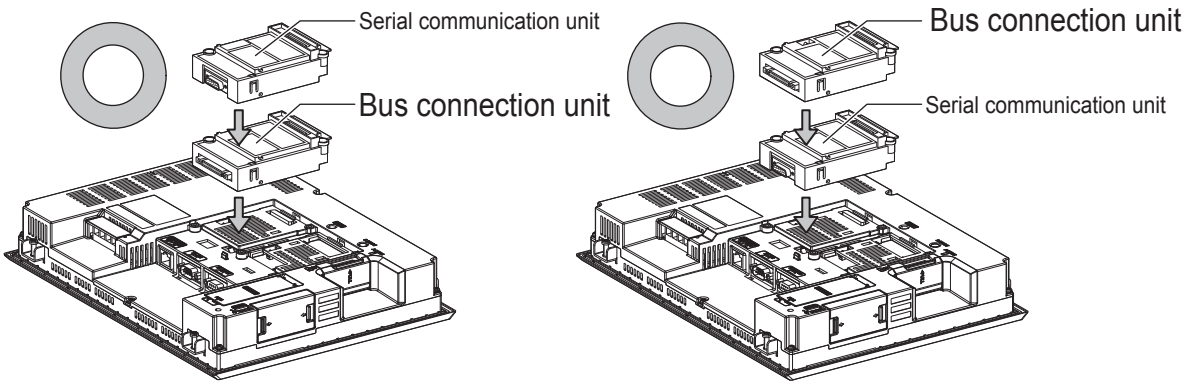

■2. When using a MELSECNET/H communication unit, CC-Link IE Controller Network communication unit, or CC-Link communication unit (GT15-J61BT13)

Install a MELSECNET/H communication unit, CC-Link IE Controller Network communication unit, or CC-Link communication unit in the 1st stage of an extension interface.
If a bus connection unit is installed in the 2nd stage or above, the unit cannot be used.
Example: When installing a MELSECNET/H communication unit and a serial communication unit

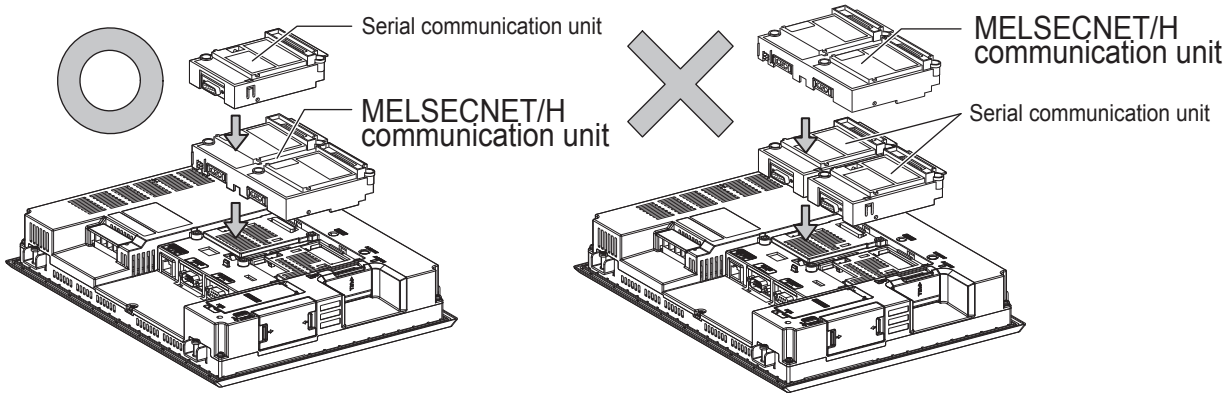

■3. When using a serial communication unit

A serial communication unit can be installed in any position (1st to 3rd stage) of the extension interface.

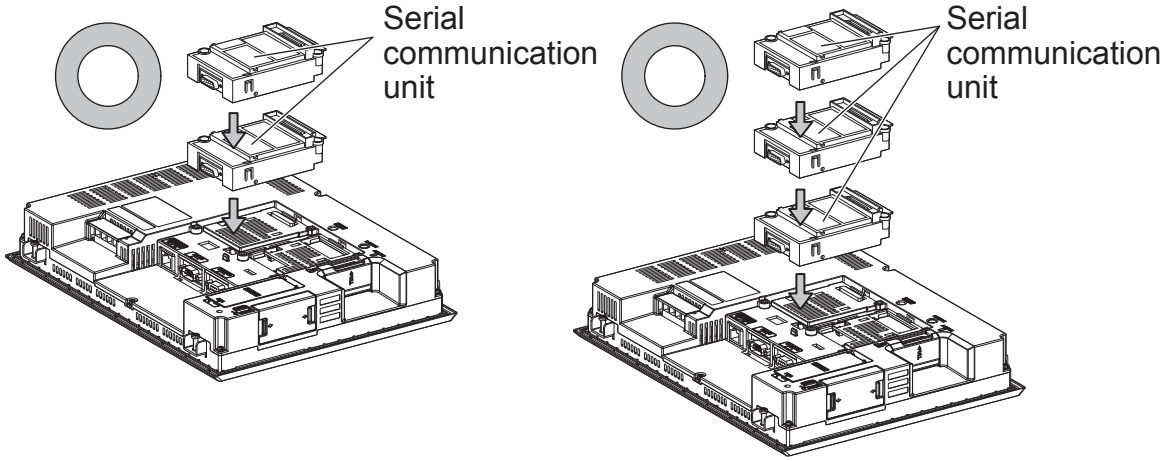

■4. When using a field network adapter unit

A field network adapter unit can be installed in any position (1st to 3rd stage) of the extension interface.
However, at the top of the field network adapter unit, you will not be able to mount the each communication unit.
Example: Installing a field network adapter unit

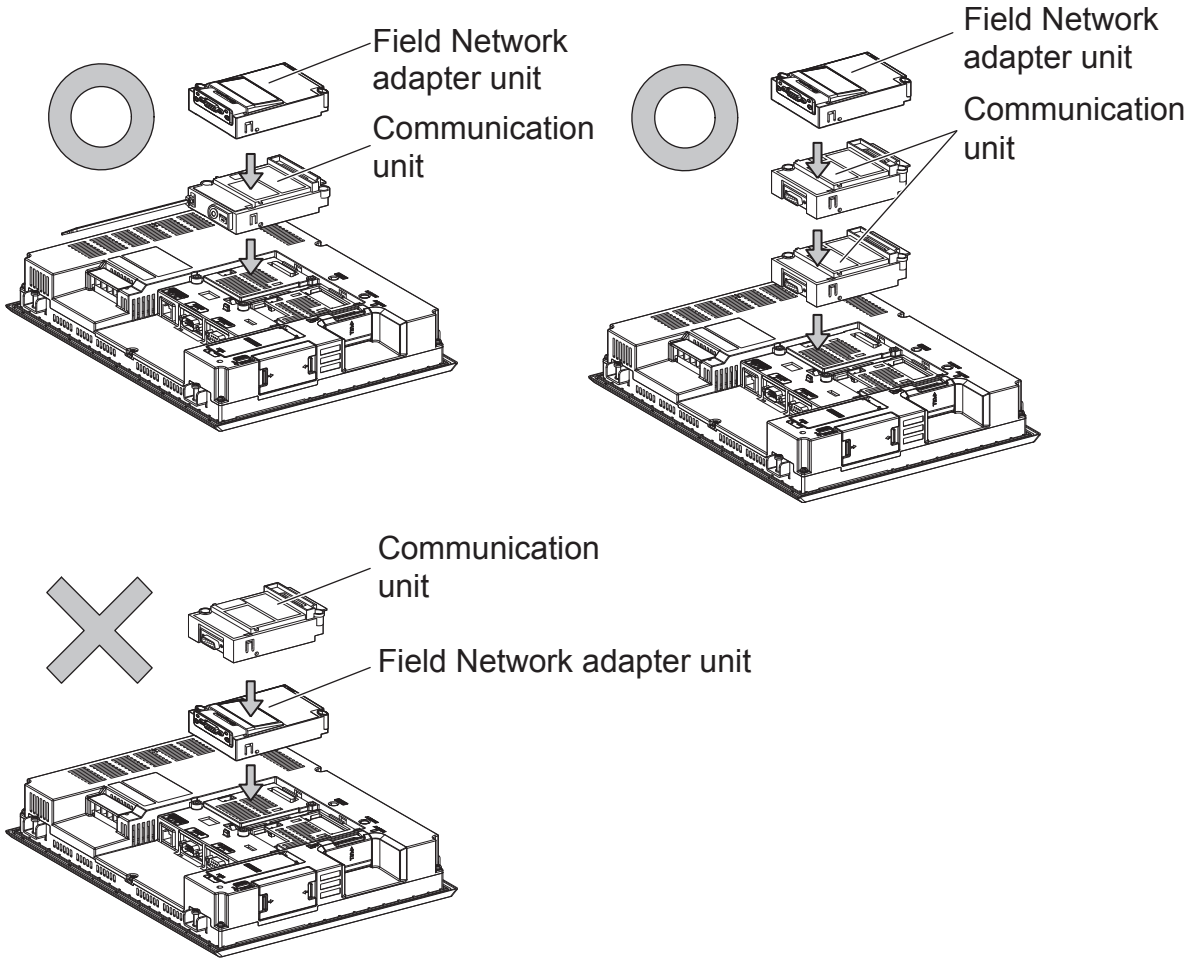

■5. When using the sound output unit or external I/O unit

The sound output unit or external I/O unit can be installed in any position (1st to 3rd stage) of the extension interface.
Example: When installing a sound output unit

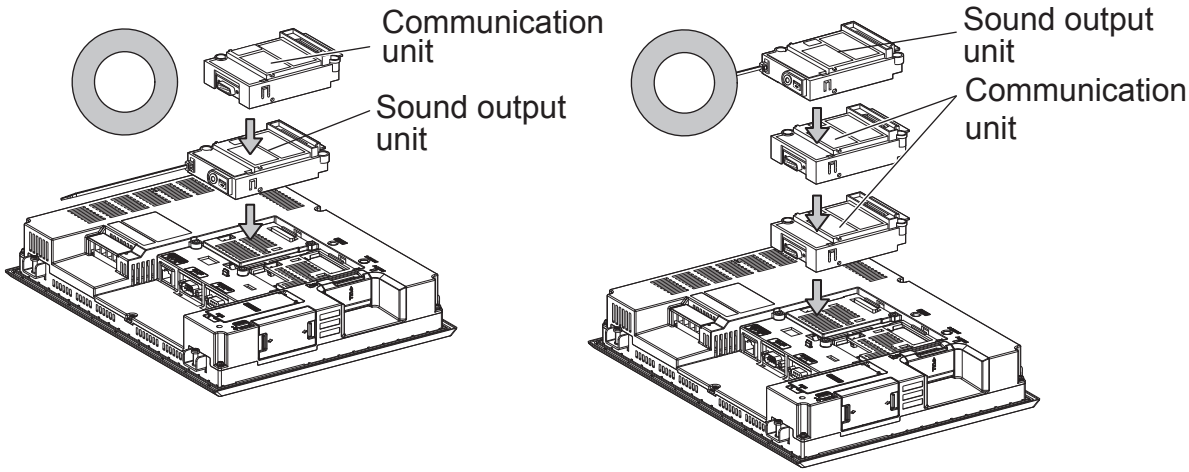

■6. When using the video input unit, RGB input unit, video/RGB input unit, RGB output unit, or multimedia unit

Only either one of the video input unit, RGB input unit, video/RGB input unit, RGB output unit, or multimedia unit can be installed to the GOT.
Install the video input unit, RGB input unit, video/RGB input unit, RGB output unit, or multimedia unit at the 1st stage of the extension interface. These communication units cannot be used if installed in the 2nd or higher stage.
When any of these units is used, the communication units indicated below must be installed in the 2nd stage of the extension interface.

Communication unit	Model
Bus connection unit	GT15-QBUS2, GT15-ABUS2
MELSECNET/H communication unit	GT15-J71LP23-25, GT15-J71BR13
CC-Link IE Controller Network connection	GT15-J71GP23-SX
CC-Link communication unit	GT15-J61BT13

Example: When installing a video input unit and a MELSECNET/H communication unit

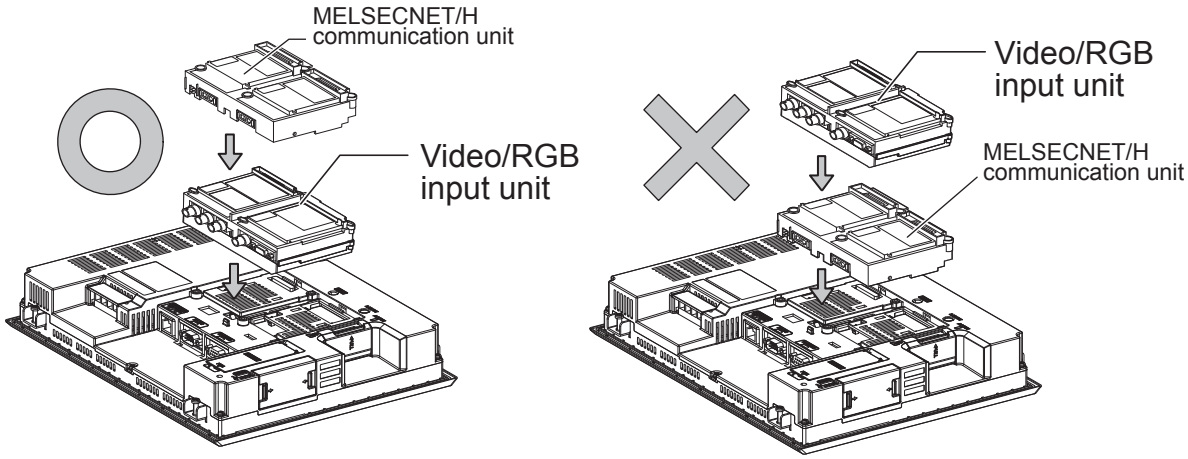

1.4 Connection Cables for the Respective Connection

To connect the GOT to a device in the respective connection type, connection cables between the GOT and a device are necessary.
For cables needed for each connection, refer to each chapter for connection.

1.4.1 GOT connector specifications

The following shows the connector specifications on the GOT side.
Refer to the following table when preparing connection cables by the user.

■1. RS-232 interface

Use the following as the RS-232 interface and the RS-232 communication unit connector on the GOT. For the GOT side of the connection cable, use a connector and connector cover applicable to the GOT connector.

(1) Connector specifications

GOT	Hardware Version	Connector type	Connector model	Manufacturer
GT27 GT25 GT23 GT2105-QTBDS GT2105-QMBDS	-	9-pin D-sub (male) inch screw fixed type	17LE-23090-27(D4C□)	DDK Ltd.
GT15-RS2-9P	-	9-pin D-sub (male) inch screw fixed type	17LE-23090-27(D3CC)	DDK Ltd.
GT01-RS4-M	-			
GT2104-RTBD GT2104-PMBDS2 GT2103-PMBDS2	-	9-pin terminal block*1	MC1.5/9-G-3.5BK	PHOENIX CONTACT Inc

*1 The terminal block (MC1.5/9-ST-3.5 or corresponding product) of the cable side is packed together with the GT2104-RTBD, GT2103-PMBDS2.

(2) Connector pin arrangement

GT27, GT25, GT23, GT15-RS2-9P, GT01-RS4-M	GT2104-RTBD, GT2103-PMBDS2
GOT main part connector see from the front 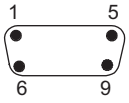 9-pin D-sub (male)	See from the back of a GOT main part 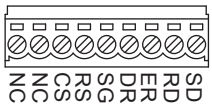 9-pin terminal block

■2. RS-422/485 interface

Use the following as the RS-422/485 interface and the RS-422/485 communication unit connector on the GOT.
For the GOT side of the connection cable, use a connector and connector cover applicable to the GOT connector.

(1) Connector model

GOT	Connector type	Connector model	Manufacturer
GT27 GT25 GT23 GT2105-QTBDS GT2105-QMBDS	9-pin D-Sub (female) M2.6 millimeter screw fixed type	17LE-13090-27(D2AC)	DDK Ltd.
GT2104-PMBD GT2103-PMBD	5-pin terminal block*1	MC1.5/5-G-3.5BK	PHOENIX CONTACT Inc
GT2104-RTBD GT2104-PMBDS GT2104-PMBLS GT2103-PMBDS GT2103-PMBLS	9-pin terminal block*2	MC1.5/9-G-3.5BK	PHOENIX CONTACT Inc
GT15-RS4-9S	9-pin D-Sub (female) M2.6 millimeter screw fixed type	17LE-13090-27(D3AC)	DDK Ltd.
GT01-RS4-M			
GT15-RS4-TE	-	-	SL-SMT3.5/10/90F BOX

*1 The terminal block (MC1.5/5-ST-3.5 or corresponding product) of the cable side is packed together with the GT2103-PMBD.
*2 The terminal block (MC1.5/9-ST-3.5 or corresponding product) of the cable side is packed together with the GT2104-RTBD, GT2103-PMBDS, GT2103-PMBLS.

(2) Connector pin arrangement

GT27, GT25, GT23, GT2105-QTBDS, GT2105-QMBDS, GT01-RS4-M	GT2104-PMBD, GT2103-PMBD	GT2104-RTBD GT2104-PMBDS GT2104-PMBLS GT2103-PMBDS GT2103-PMBLS
GOT main part connector see from the front 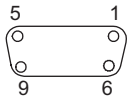 9-pin D-sub (female)	See from the back of a GOT main part 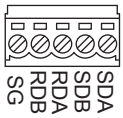 5-pin terminal block	See from the back of a GOT main part 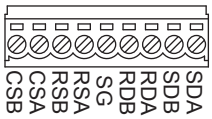 9-pin terminal block

1.4.2 Coaxial cableconnector connection method

The following describes the method for connecting the BNC connector (connector plug for coaxial cable) and the cable.

⚠CAUTION

- Solder the coaxial cable connectors properly.
  Insufficient soldering may result in malfunctions.

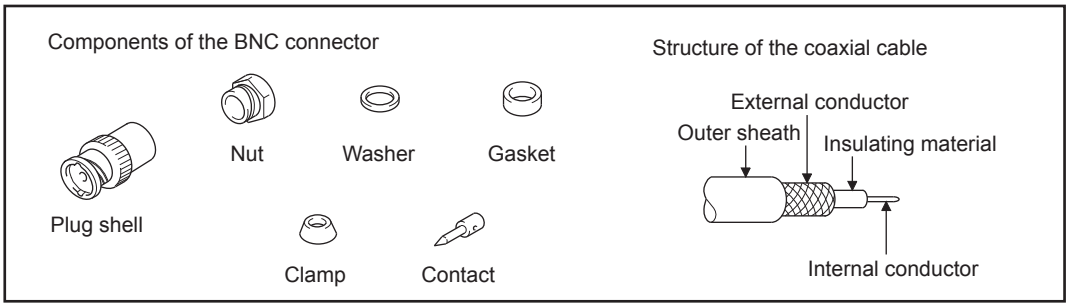

Step 1. Remove the external sheath of the coaxial cable with dimensions as shown below.

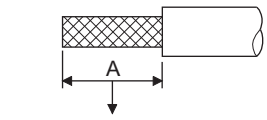

Cut this portion of the outer sheath

Cable in use	A
3C-2V	15 mm
5C-2V, 5C-2V-CCY	10 mm

Step 2. Pass the nut, washer, gasket, and clamp through the coaxial cable as shown on the left and loosen the external conductor.

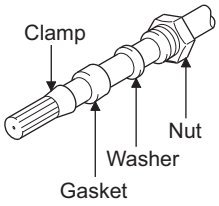

Step 3. Cut the external conductor, insulting material, and internal conductor with the dimensions as shown below. Note that the external conductor should be cut to the same dimension as the tapered section of the clamp and smoothed down to the clamp.

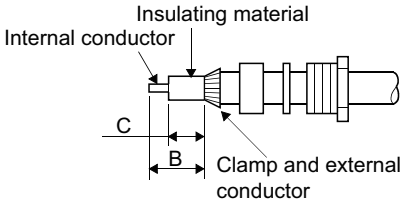

Cable in use	B	C
3C-2V	6 mm	3 mm
5C-2V, 5C-2V-CCY	7 mm	5 mm

Step 4. Solder the contact to the internal conductor.

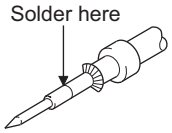

Step 5. *4.* Insert the connector assembly shown in ### into the plug shell and screw the nut into the plug shell.

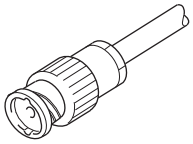

Precautions for soldering
Note the following precautions when soldering the internal conductor and contact.

- Make sure that the solder does not bead up at the soldered section.
- Make sure there are no gaps between the connector and cable insulator or they do not cut into each other.
- Perform soldering quickly so the insulation material does not become deformed.

1.4.3 Terminating resistors of GOT

The following shows the terminating resistor specifications on the GOT side.
When setting the terminating resistor in each connection type, refer to the following.

■1. RS-422/485 communication unit

Set the terminating resistor using the terminating resistor setting switch.

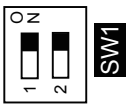

Terminating resistor*1	Switch No.	
	1	2
100 OHM	ON	ON
Disable	OFF	OFF

*1 The default setting is "Disable".

- For RS422/485 communication unit

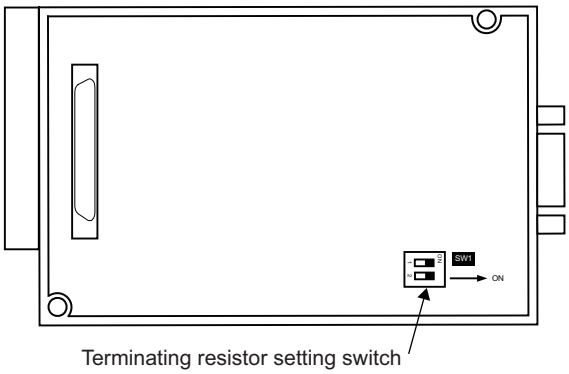

Rear view of RS-422/485 communication unit.

■2. GT27

Set the terminating resistor using the terminating resistor setting switch.

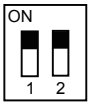

Terminating resistor*1	Switch No.	
	1	2
100 OHM	ON	ON
Disable	OFF	OFF

*1 The default setting is "Disable".

- For GT2710-V

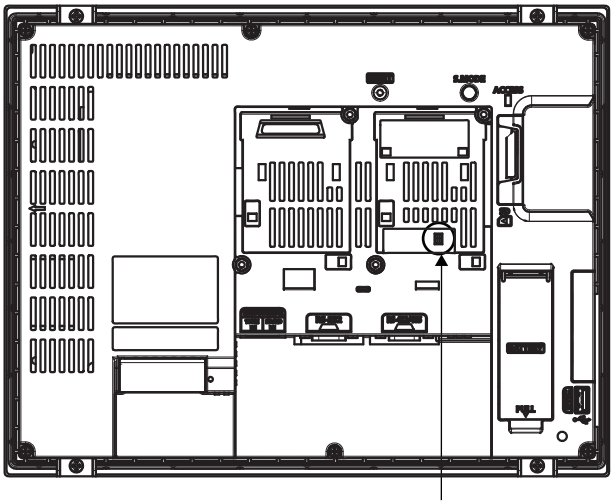

Terminating resistor setting switch
(inside the cover)

■3. GT25

Set the terminating resistor using the terminating resistor setting switch.

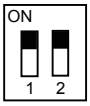

Terminating resistor*1	Switch No.	
	1	2
100 OHM	ON	ON
Disable	OFF	OFF

*1 The default setting is "Disable".

- For GT2510-V

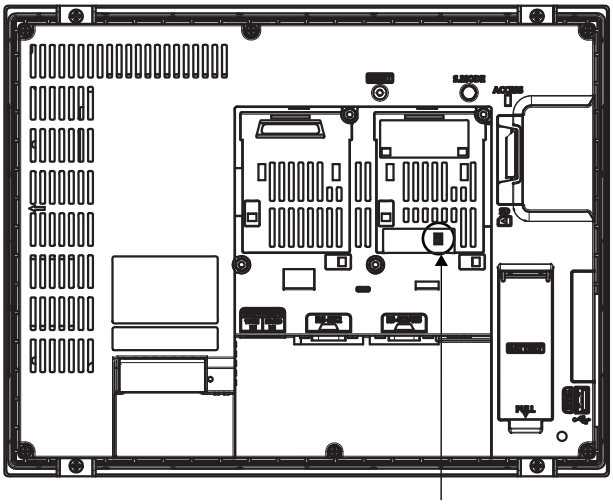

Terminating resistor setting switch
(inside the cover)

■4. GT23

Set the terminating resistor using the terminating resistor setting switch.

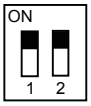

Terminating resistor*1	Switch No.	
	1	2
100 OHM	ON	ON
Disable	OFF	OFF

*1 The default setting is "Disable".

- For GT2310-V

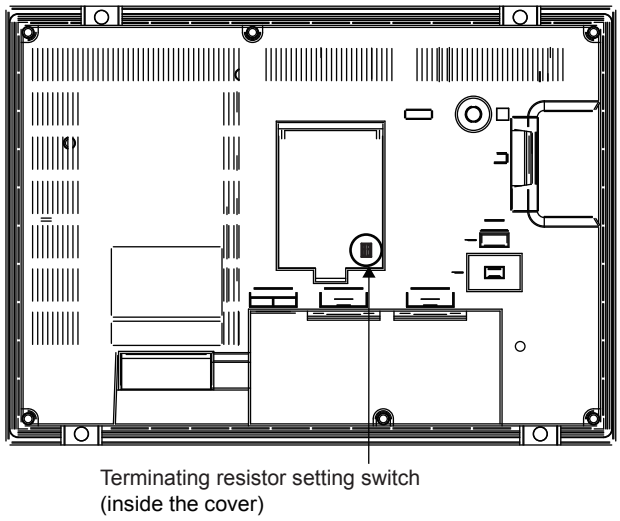

■5. GT21

Set the terminating resistor using the terminating resistor setting switch.

- For GT2103-PMBD

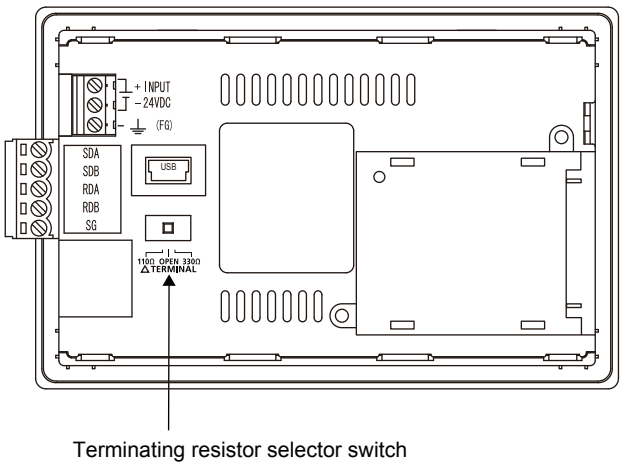

1.5 Verifying GOT Recognizes Connected Equipment

Verify the GOT recognizes controllers on [Communication Settings] of the Utility.

- Channel number of communication interface, communication drivers allocation status
- Communication unit installation status

For details on the Utility, refer to the following manual.

➠ GOT2000 Series User's Manual (Utility)

Step 1. After powering up the GOT, touch [GOT basic set] → [Controller] from the Utility.

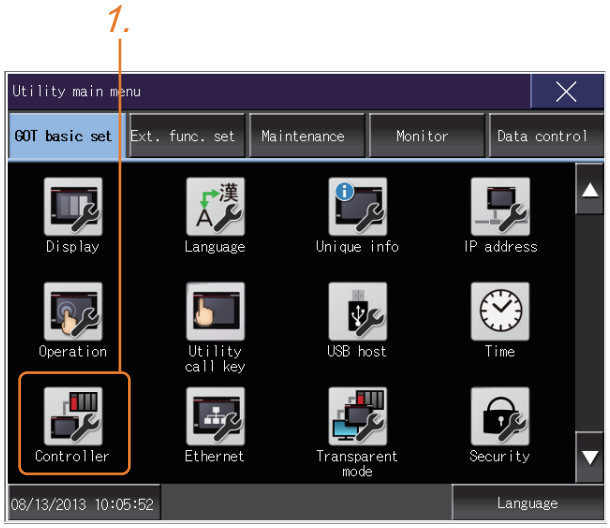

Step 2. The [Communication Settings] appears.

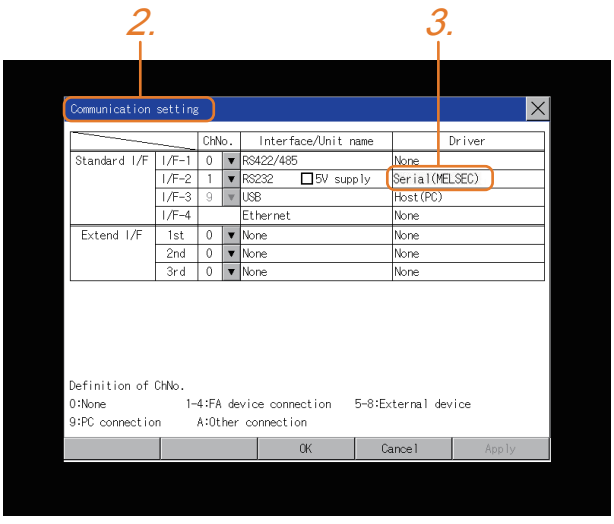

Step 3. Verify that the communication driver name to be used is displayed in the communication interface box to be used.

Step 4. When the communication driver name is not displayed normally, carry out the following procedure again.

➠ 1.1Setting the Communication Interface

POINT

Utility

(1) How to display Utility (at default)

Utility call key
1-point press on GOT screen
upper-left corner

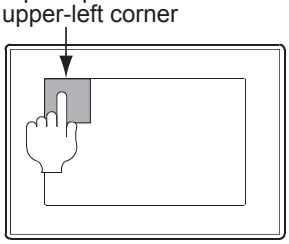

Utility display

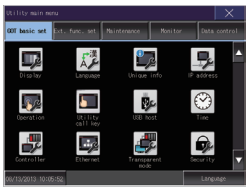

(2) Utility call

When setting [Pressing time] to other than 0 second on the setting screen of the utility call key, press and hold the utility call key until the buzzer sounds. For the setting of the utility call key, refer to the following.

➠ GOT2000 Series User's Manual (Utility)

(3) Communication interface setting by the Utility

The communication interface setting can be changed on the Utility's [Communication setting] after writing [Controller Setting] of project data.
For details on the Utility, refer to the following manual.

➠ GOT2000 Series User's Manual (Utility)

(4) Precedence in communication settings

When settings are made by GT Designer3 or the Utility, the latest setting is effective.

1.6 Checking for Normal Monitoring

1.6.1 Check on the GOT

■1. Check for errors occurring on the GOT

Presetting the system alarm to project data allows you to identify errors occurred on the GOT, PLC CPU, servo amplifier and communications.
For details on the operation method of the GOT Utility screen, refer to the following manual.

➠ GOT2000 Series User's Manual (Utility)

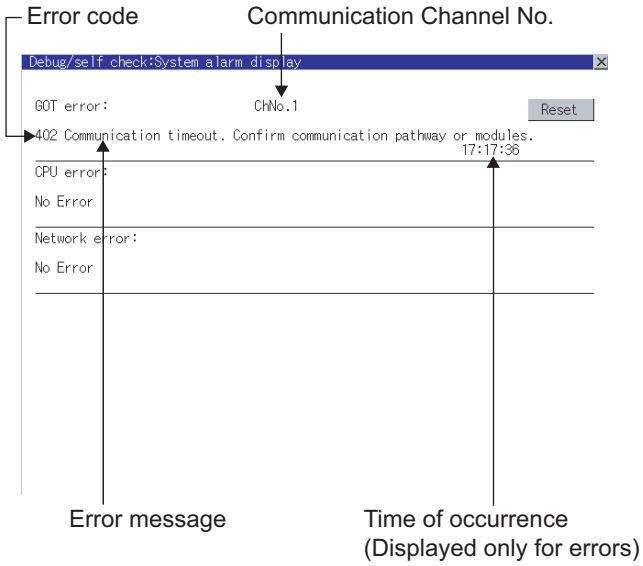

POINT

Alarm popup display
With the alarm popup display function, alarms are displayed as a popup display regardless of whether an alarm display object is placed on the screen or not (regardless of the display screen).
Since comments can be flown from right to left, even a long comment can be displayed all.
For details of the alarm popup display, refer to the following manual.

➠ GT Designer3 (GOT2000) Screen Design Manual

■2. Perform an I/O check

Whether the PLC can communicate with the GOT or not can be checked by the I/O check function.
If this check ends successfully, it means correct communication interface settings and proper cable connection.
Display the I/O check screen by Main Menu.

- Display the I/O check screen by [Main menu] → [Self check] → [I/O check].

For details on the I/O check, refer to the following manual:

➠ GOT2000 Series User's Manual (Utility)

Step 1. Touch [CPU] on the I/O check screen.
Touching [CPU] executes the communication check with the connected PLC.

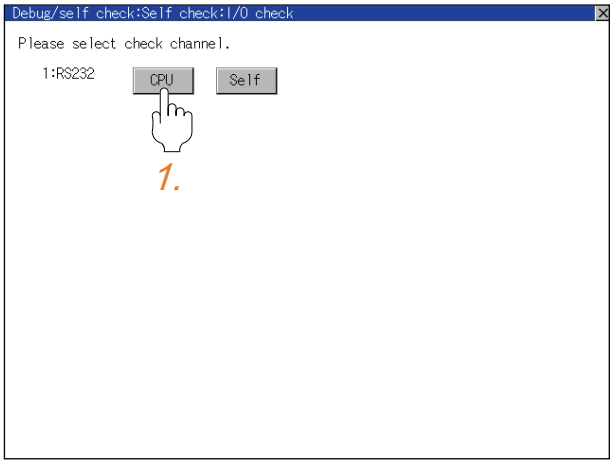

Step 2. When the communication screen ends successfully, the screen on the left is displayed.

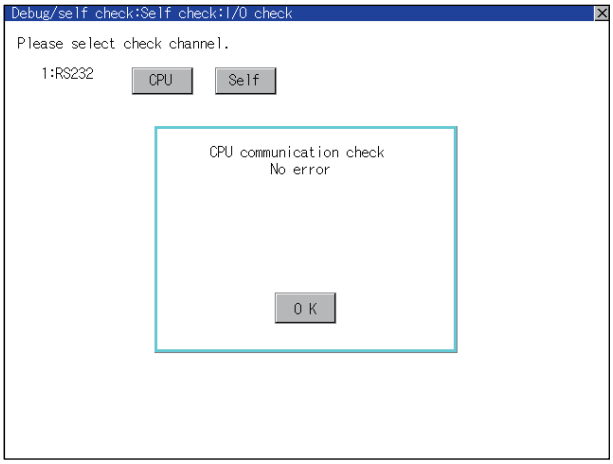

■3. Communication monitoring function

The communication monitoring is a function that checks whether the PLC can communicate with the GOT.
If this check ends successfully, it means correct communication interface settings and proper cable connection.
Display the communication monitoring function screen by [Main Menu] → [Comm. Setting] → [Comm. Monitor].
For details on the communication monitoring function, refer to the following manual:

➠ GOT2000 Series User's Manual (Utility)

(Operation of communication monitoring function screen)

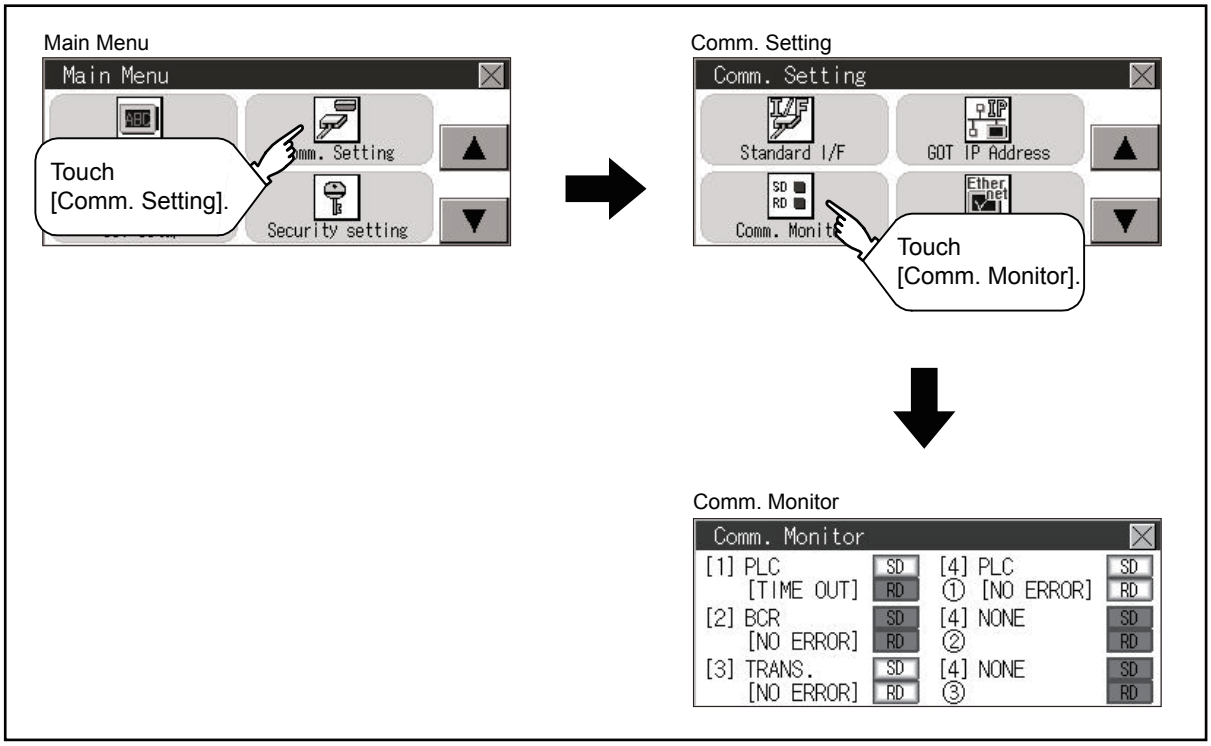

1.6.2 Confirming the communication state on the GOT side (For Ethernet connection)

■1. Confirming the communication state on Windows®, GT Designer3

(1) When using the Command Prompt of Windows®

Execute a Ping command at the Command Prompt of Windows®.

(a) When normal communication

C:\>Ping 192.168.3.18
Reply from 192.168.3.18: bytes=32 time<1ms TTL=64

(b) When abnormal communication

C:\>Ping 192.168.3.18
Request timed out.

(2) When using the [Connection Test] of GT Designer3

Select [Communication] → [Communication settings] from the menu to display [TEST].

Step 1. Set the [PC side I/F] to the [Ethernet].

Step 2. Specify the [GOT IP Address] of the [Communication Configuration] and click the [Test] button.

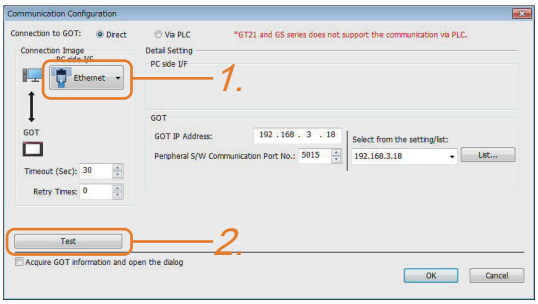

Step 3. Check if GT Designer3 has been connected to the GOT.

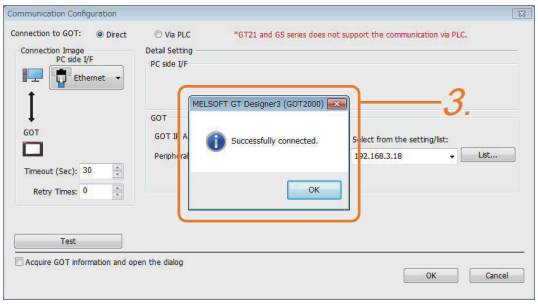

(3) When abnormal communication

At abnormal communication, check the followings and execute the Ping command or [Connection Test] again.

- Mounting condition of Ethernet communication unit
- Cable connecting condition
- Confirmation of [Communication Settings]
- IP address of GOT specified by Ping command

■2. Confirming the communication state on the GOT

[PING Test] can be confirmed by the Utility screen of the GOT.
For details on the operation method of the GOT Utility screen, refer to the following manual.

➠ GOT2000 Series User's Manual (Utility)

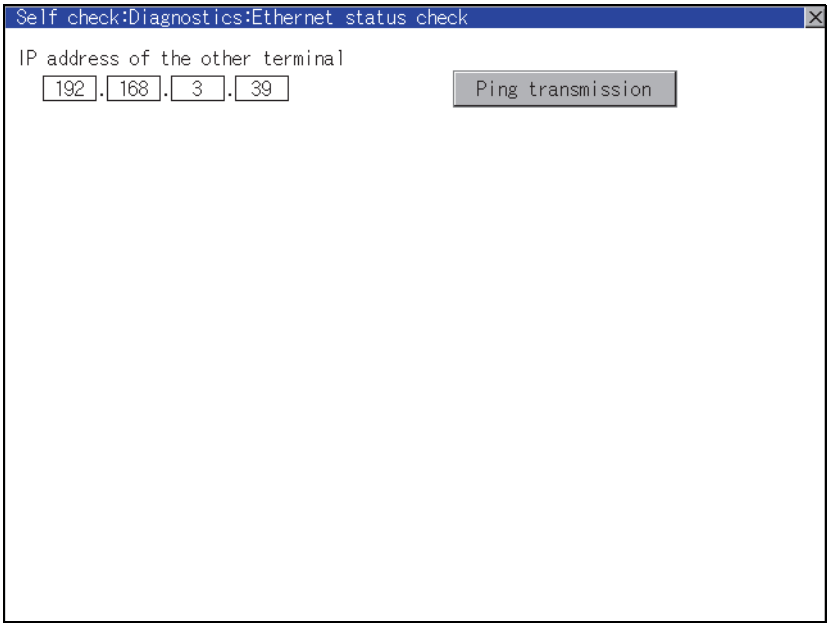

1.6.3 Confirming the communication state to each station (Station monitoring function)

The station monitoring function detects the faults (communication timeout) of the stations monitored by the GOT. When detecting the abnormal state, it allocates the data for the faulty station to the GOT special register (GS).

■1. No. of faulty stations

(1) Ethernet connection (Except for Ethernet multiple connection)

Total No. of the faulty CPU is stored.

Device	b15 to b8	b7 to b0
GS230	(00H fixed)	No. of faulty stations

(2) Ethernet multiple connection

Total No. of the faulty connected equipment is stored.

Channel	Device	b15 to b8	b7 to b0
Ch1	GS280	(00H fixed)	No. of faulty stations
Ch2	GS300	(00H fixed)	No. of faulty stations
Ch3	GS320	(00H fixed)	No. of faulty stations
Ch4	GS340	(00H fixed)	No. of faulty stations

POINT

When monitoring GS230 on Numerical Display

When monitoring GS230 on Numerical Display, check [mask processing] with data operation tab as the following.

For the data operation, refer to the following manual.

➠ GT Designer3 (GOT2000) Screen Design Manual

- Numerical Display (Data Operation tab)

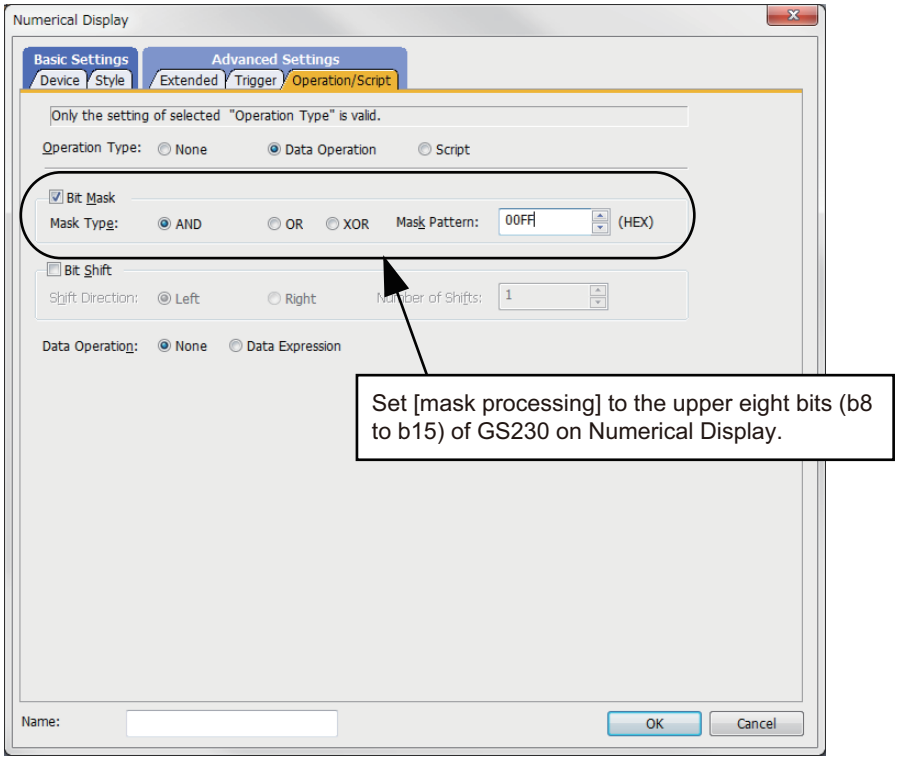

■2. Faulty station information

The bit corresponding to the faulty station is set. (0: Normal, 1: Abnormal)
The bit is reset after the fault is recovered.

(1) Ethernet connection (Except for Ethernet multiple connection)

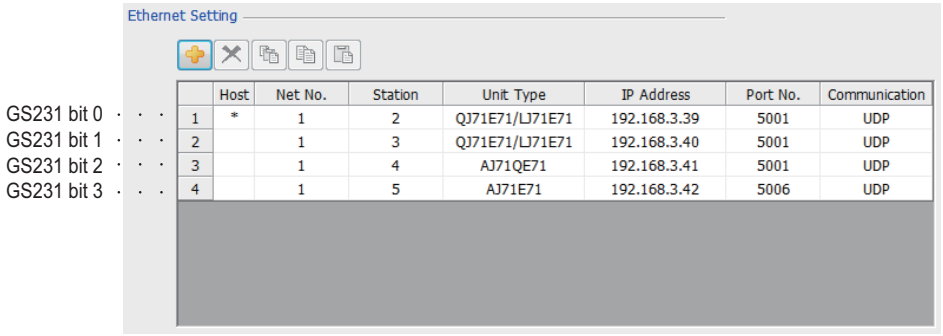

Device	Ethernet setting No.															
	b15	b14	b13	b12	b11	b10	b9	b8	b7	b6	b5	b4	b3	b2	b1	b0
GS231	16	15	14	13	12	11	10	9	8	7	6	5	4	3	2	1
GS232	32	31	30	29	28	27	26	25	24	23	22	21	20	19	18	17
GS233	48	47	46	45	44	43	42	41	40	39	38	37	36	35	34	33
GS234	64	63	62	61	60	59	58	57	56	55	54	53	52	51	50	49
GS235	80	79	78	77	76	75	74	73	72	71	70	69	68	67	66	65
GS236	96	95	94	93	92	91	90	89	88	87	86	85	84	83	82	81
GS237	112	111	110	109	108	107	106	105	104	103	102	101	100	99	98	97
GS238	128	127	126	125	124	123	122	121	120	119	118	117	116	115	114	113

(2) Ethernet connection, CC-Link IE Controller Network connection, CC-Link IE Field Network connection, Temperature controller connection, Inverter connection, Servo amplifier connection.

The station number to which each device corresponds changes according to the connection/non connection with Ethernet.
With Ethernet connection: 1 to 128
With other than Ethernet connection: 0 to 127
Example) With Ethernet connection, when PC No. 100 CPU connecting to Ch3 is faulty, GS327.b3 is set.

- With Ethernet connection: 1 to 128

Device				Station number															
Ch1	Ch2	Ch3	Ch4	b15	b14	b13	b12	b11	b10	b9	b8	b7	b6	b5	b4	b3	b2	b1	b0
GS281	GS301	GS321	GS341	16	15	14	13	12	11	10	9	8	7	6	5	4	3	2	1
GS282	GS302	GS322	GS342	32	31	30	29	28	27	26	25	24	23	22	21	20	19	18	17
GS283	GS303	GS323	GS343	48	47	46	45	44	43	42	41	40	39	38	37	36	35	34	33
GS284	GS304	GS324	GS344	64	63	62	61	60	59	58	57	56	55	54	53	52	51	50	49
GS285	GS305	GS325	GS345	80	79	78	77	76	75	74	73	72	71	70	69	68	67	66	65
GS286	GS306	GS326	GS346	96	95	94	93	92	91	90	89	88	87	86	85	84	83	82	81
GS287	GS307	GS327	GS347	112	111	110	109	108	107	106	105	104	103	102	101	100	99	98	97
GS288	GS308	GS328	GS348	128	127	126	125	124	123	122	121	120	119	118	117	116	115	114	113

• With other than Ethernet connection: 0 to 127

Device				Station number															
Ch1	Ch2	Ch3	Ch4	b15	b14	b13	b12	b11	b10	b9	b8	b7	b6	b5	b4	b3	b2	b1	b0
GS281	GS301	GS321	GS341	15	14	13	12	11	10	9	8	7	6	5	4	3	2	1	0*1
GS282	GS302	GS322	GS342	31	30	29	28	27	26	25	24	23	22	21	20	19	18	17	16
GS283	GS303	GS323	GS343	47	46	45	44	43	42	41	40	39	38	37	36	35	34	33	32
GS284	GS304	GS324	GS344	63	62	61	60	59	58	57	56	55	54	53	52	51	50	49	48
GS285	GS305	GS325	GS345	79	78	77	76	75	74	73	72	71	70	69	68	67	66	65	64
GS286	GS306	GS326	GS346	95	94	93	92	91	90	89	88	87	86	85	84	83	82	81	80
GS287	GS307	GS327	GS347	111	110	109	108	107	106	105	104	103	102	101	100	99	98	97	96
GS288	GS308	GS328	GS348	127 *1*2	126 *1*2	125 *1*2	124 *1*2	123 *1*2	122 *1*2	121 *1*2	120	119	118	117	116	115	114	113	112

*1 When CC-Link IE controller network connection is not used.

*2 When CC-Link IE field network connection is not used.

For details on the GS Device, refer to the following help.

➠ GT Designer3 (GOT2000) Screen Design Manual

■3. Network No., station No. notification

The network No. and station No. of the GOT in Ethernet connection are stored at GOT startup.
If connected by other than Ethernet, 0 is stored.

Device				Description
CH1	CH2	CH3	CH4	
GS376	GS378	GS380	GS382	Network No. (1 to 239)
GS377	GS379	GS381	GS383	Station No. (1 to 64)

CONNECTIONS TO NON-MITSUBISHI PRODUCTS

2. CONNECTION TO IAI ROBOT CONTROLLER . . . . . .2 - 1
3. CONNECTION TO AZBIL (former YAMATAKE) CONTROL EQUIPMENT . . . . . .3 - 1
4. CONNECTION TO OMRON PLC . . . . . .4 - 1
5. CONNECTION TO OMRON TEMPERATURE CONTROLLER . . . . . .5 - 1
6. CONNECTION TO KEYENCE PLC. . . . . .6 - 1
7. CONNECTION TO KOYO EI PLC . . . . . .7 - 1
8. CONNECTION TO JTEKT PLC. . . . . .8 - 1
9. CONNECTION TO SHARP PLC . . . . . .9 - 1
10. CONNECTION TO SHINKO TECHNOS INDICATING CONTROLLER. . . . . .10 - 1
11. CONNECTION TO CHINO CONTROLLER. . . . . .11 - 1
12. CONNECTION TO TOSHIBA PLC . . . . . .12 - 1
13. CONNECTION TO TOSHIBA MACHINE PLC. . . . . .13 - 1
14. CONNECTION TO PANASONIC SERVO AMPLIFIER . . . .14 - 1
15. CONNECTION TO PANASONIC INDUSTRIAL DEVICES SUNX PLC . . . . . .15 - 1

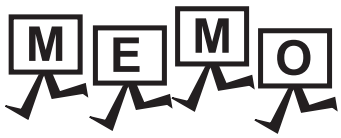
MEMO

2. CONNECTION TO IAI ROBOT CONTROLLER

2.1 Connectable Model List . . . . . 2 - 2
2.2 System Configuration . . . . . 2 - 3
2.3 Connection Diagram. . . . . 2 - 17
2.4 GOT Side Settings . . . . . 2 - 26
2.5 Robot Controller Side Setting . . . . . 2 - 28
2.6 Device Range that Can Be Set. . . . . 2 - 33
2.7 Precautions . . . . . 2 - 49

2. CONNECTION TO IAI ROBOT CONTROLLER

2.1 Connectable Model List

The following table shows the connectable models.

Series	Model name	Clock	Communication Type	Connectable GOT	Refer to
X-SEL	XSEL-J	×	RS-232	GT27 GT25 GT23 GT21 GS	➠ 2.2.1
	XSEL-K				
	XSEL-KE				
	XSEL-KT				
	XSEL-KET				
	XSEL-P				
	XSEL-Q				
	XSEL-JX				
	XSEL-KX				
	XSEL-KTX				
	XSEL-PX				
	XSEL-QX				
SSEL	SSEL				
ASEL	ASEL				
PSEL	PSEL				
PCON	PCON-C	×	RS-232 RS-422	GT27 GT25 GT23 GT21 GS	➠ 2.2.2
	PCON-CG				
	PCON-CF				
	PCON-CY				
	PCON-SE				
	PCON-PL				
	PCON-PO				
	PCON-CA				
	PCON-CFA				
ACON	ACON-C				
	ACON-CG				
	ACON-CY				
	ACON-SE				
	ACON-PL				
	ACON-PO				
SCON	SCON-C				
	SCON-CA				
ERC2	ERC2				

2.2 System Configuration

2.2.1 System Configuration for connecting to X-SEL, SSEL, ASEL, PSEL

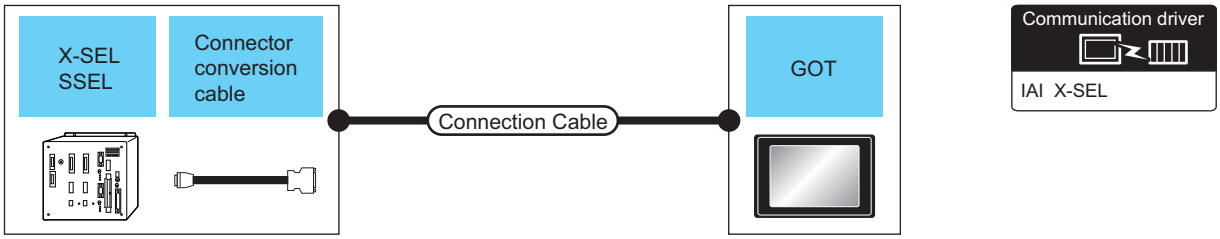

PLC			Connection cable	Max. distance	GOT		Number of connectable equipment
Model name	RS-232C adapter	Communication Type	Cable model Connection diagram number		Option device	Model	
X-SEL (Teaching connector)	-	RS-232	CB-ST-E1MW050[*1] or User preparing RS-232 connection diagram 1)	10m	- (Built into GOT)	GT27 GT25 GT23 GT21(05Q) GS	1 GOT for 1 Controller
					GT15-RS2-9P	GT27 GT25	
					GT10-C02H-6PT9P[*2]	GT21(03P 04P R4) GT21(03P 04P R2)	
			CB-ST-E1MW050[*1] + User preparing RS-232 connection diagram 4) or User preparing RS-232 connection diagram 5)	10m	- (Built into GOT)	GT21(04R) GT21(03P 04P R2)	
X-SEL (General RS232C port connector)	-	RS-232	User preparing RS-232 connection diagram 2)	10m	- (Built into GOT)	GT27 GT25 GT23 GT21(05Q) GS	
					GT15-RS2-9P	GT27 GT25	
					GT10-C02H-6PT9P[*2]	GT21(03P 04P R4) GT21(03P 04P R2)	
			User preparing RS-232 connection diagram 6)	10m	- (Built into GOT)	GT21(04R) GT21(03P 04P R2)	

PLC			Connection cable	Max. distance	GOT		Number of connectable equipment
Model name	RS-232C adapter	Communication Type	Cable model Connection diagram number		Option device	Model	
SSEL ASEL PSEL	CB-SEL-SJ002*1	RS-232	CB-ST-E1MW050*1	10m	- (Built into GOT)	GT27 GT25 GT23 GT21 GS	1 GOT for 1 Controller
					GT15-RS2-9P	GT27 GT25	
					GT10-C02H-6PT9P*2	GT2103P R4 GT2103P R2	
			CB-ST-E1MW050*1 + User preparing RS-232 connection diagram 4) or User preparing RS-232 connection diagram 5)	10m	- (Built into GOT)	GT2104R GT2103P R2	

*1 Product manufactured by IAI Corporation. For details of the product, contact IAI Corporation.

*2 When a GT10-C02H-6PT9P unit of the sub version A or B is used, do not ground the case of the D-sub (9-pin) connector.

2.2.2 System Configuration for connecting to PCON, ACON, SCON, ERC2

■1. When connecting to one controller

(1) When using the RS-232 connection

(a) PCON, ACON, SCON, ERC2 (SIO specifications), ERC2 (NP/PN specifications)

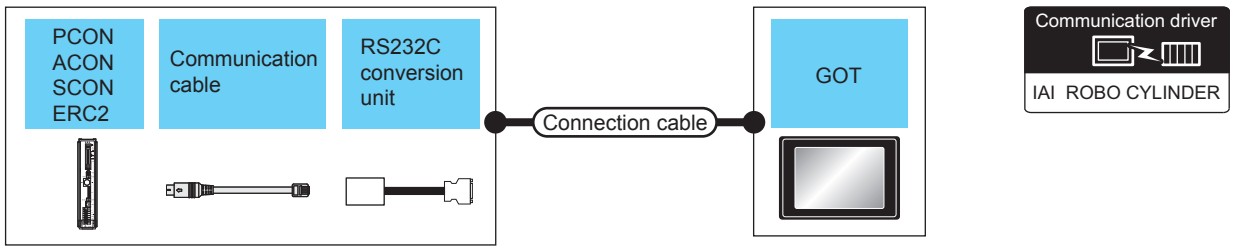

Controller				Connection cable		GOT		Number of connectable equipment
Model name	Communication cable	RS232C conversion unit	Communication Type	Connection diagram number	Max. distance	Option device	Model	
PCON ACON SCON ERC2 (NP/PN specifications)*3	CB-RCA-SIO050*1 (5m)	RCB-CV-MW*1 (0.3m)	RS-232	-	-	- (Built into GOT)	GT27 GT25 GT23 GT21(05Q) GS	1 GOT for 1 Controller
						GT15-RS2-9P	GT27 GT25	
						GT10-C02H-6PT9P*4	GT21(03P,04P R4) GT21(03P,04P R2)	
				User preparing RS-232 connection diagram 7)	10m	- (Built into GOT)	GT21(04R) GT21(03P,04P R2)	
ERC2 (SIO specifications)*2	CB-ERC2-SIO020*1 + CB-ERC2-PWBIO□□□*1 or CB-ERC2-PWBIO□□□-RB*1	RCB-CV-MW*1 (0.3m)	RS-232	-	-	- (Built into GOT)	GT27 GT25 GT23 GT21(05Q) GS	1 GOT for 1 Controller
						GT15-RS2-9P	GT27 GT25	
						GT10-C02H-6PT9P*4	GT21(03P,04P R4) GT21(03P,04P R2)	
				User preparing RS-232 connection diagram 7)	10m	- (Built into GOT)	GT21(04R) GT21(03P,04P R2)	

*1 Product manufactured by IAI Corporation. For details of the product, contact IAI Corporation.
*2 Use ERC2-□-□-□-□-□-SE-□-□.
*3 Use the following models.
ERC2-□-□-□-□-□-NP-□-□, ERC2-□-□-□-□-□-PN-□-□
*4 When a GT10-C02H-6PT9P unit of the sub version A or B is used, do not ground the case of the D-sub (9-pin) connector.

(b) ERC2 (NP/PN specifications) only

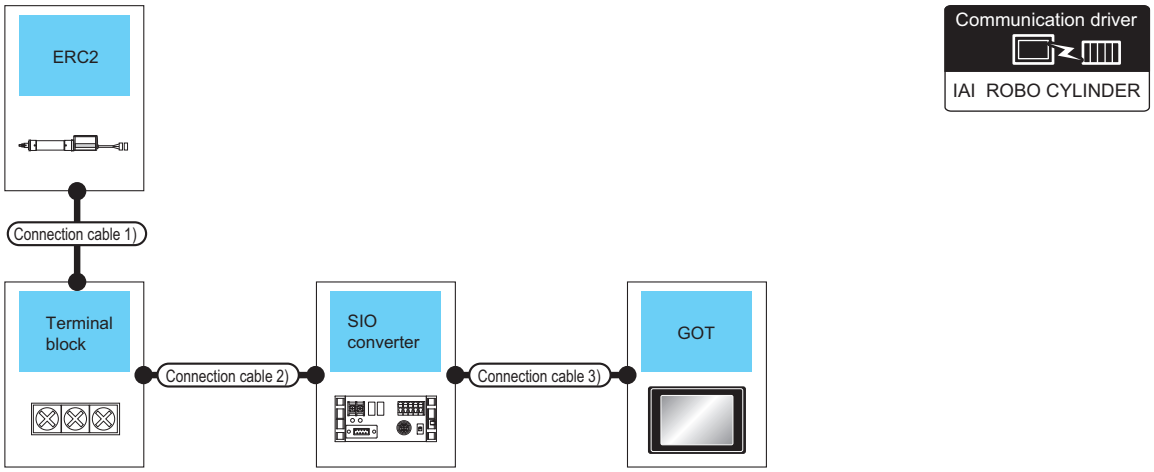

Controller	Connection cable 1)*1	Terminal block	Connection cable 2)	Max. distance	SIO converter*1		Connection cable 3)		GOT		Number of connectable equipment
Model name	Cable model		Connection diagram number		Model name	Communication Type	Cable model Connection diagram number	Max. distance	Option device	Model	
ERC2 (NP/PN specifications) *2	CB-ERC-PWBIO □□□ or CB-ERC-PWBIO □□□-RB	Terminal block (User preparing)	User preparing RS-422/485 connection diagram 7) or User preparing RS-422/485 connection diagram 8)	100m	RCB-TU-SIO-□	RS-232	RCB-CV-MW*1 (0.3m) + CB-RCA-SIO050*1 (5m) or User preparing RS-232 connection diagram 3)	15m	- (Built into GOT)	GT27 GT25 GT23 GT21 GS	1 GOT for 16 Controller
		RC □ -TU-PIO*1	User preparing RS-422/485 connection diagram 9)						GT15-RS2-9P	GT27 GT25	
									GT10-C02H-6PT9P *3	GT21 GT21	
						User preparing RS-232 connection diagram 8)			- (Built into GOT)	GT21 GT21	

*1 Product manufactured by IAI Corporation. For details of the product, contact IAI Corporation.

*2 Use the following models.
ERC2-□-□-□-□-□-NP-□-□, ERC2-□-□-□-□-□-PN-□-□

*3 When a GT10-C02H-6PT9P unit of the sub version A or B is used, do not ground the case of the D-sub (9-pin) connector.

(2) When using the RS-422/485 cable

(a) PCON, ACON, SCON, ERC2 (SIO specifications), ERC2 (NP/PN specifications)

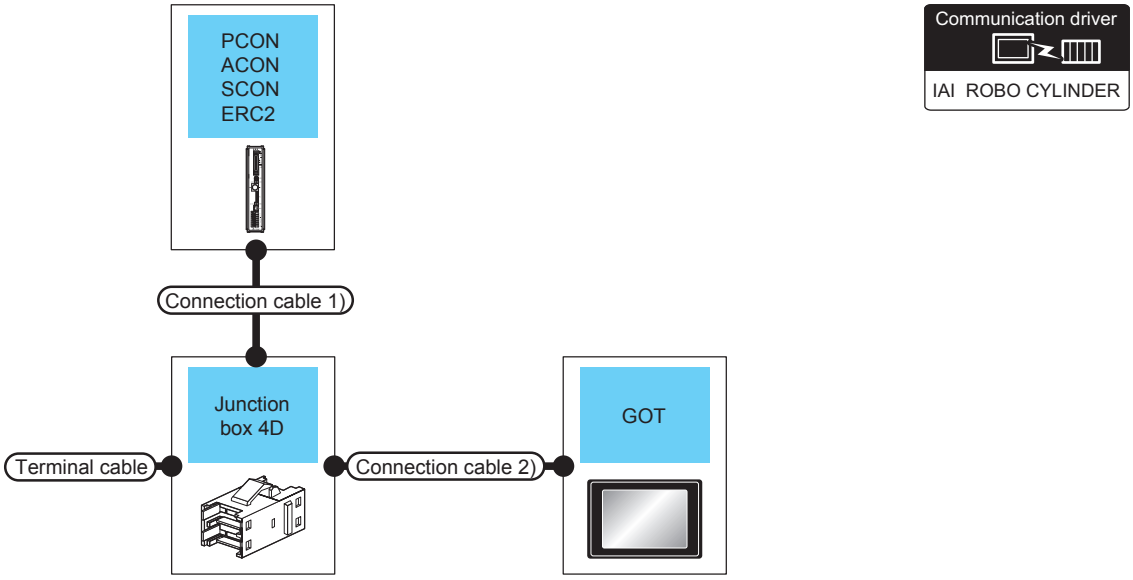

Controller	Terminal cable	Connection cable 1)*1	Junction box 4D*2	Connection cable 2)	GOT		Max. distance	Number of connectable equipment
Model name	Connection diagram number	Cable model	Model name	Connection diagram number	Option device	Model		
PCON ACON SCON ERC2 (NP/PN specifications) *5	User preparing RS-422/485 connection diagram 1)	CB-RCB-CTL002 (0.2m)	5-1473574-4	User preparing RS-422/485 connection diagram 3)	FA-LTBGT2R4CBL05(0.5m)*3 FA-LTBGT2R4CBL10(1m)*3 FA-LTBGT2R4CBL20(2m)*3	GT27 GT25 GT23	100m	16 Controllers for 1 GOT
				User preparing RS-422/485 connection diagram 4)	- (Built into GOT)	GT27 GT25 GT23 GT21 GS		
					GT15-RS4-9S	GT27 GT25		
					GT10-C02H-9SC	GT21 GT21 GT21		
				User preparing RS-422/485 connection diagram 5)	GT15-RS4-TE	GT27 GT25		
				User preparing RS-422/485 connection diagram 14)	- (Built into GOT)	GT21 GT21 GT21 GT21		

Controller	Terminal cable	Connection cable 1)*1	Junction box 4D*2	Connection cable 2)	GOT		Max. distance	Number of connectable equipment
Model name	Connection diagram number	Cable model	Model name	Connection diagram number	Option device	Model		
ERC2 (SIO specifications) *4	User preparing RS-422/485 connection diagram 1)	CB-ERC2-CTL001 + CB-ERC2-PWBIO □□□ or CB-ERC2-PWBIO □□□ -RB	5-1473574-4	User preparing RS-422/485 connection diagram 3)	FA-LTBGT2R4CBL05(0.5m)*3 FA-LTBGT2R4CBL10(1m)*3 FA-LTBGT2R4CBL20(2m)*3	GT27 GT25 GT23	100m	16 Controllers for 1 GOT
				User preparing RS-422/485 connection diagram 4)	- (Built into GOT)	GT27 GT25 GT23 GT21 GS		
					GT15-RS4-9S	GT27 GT25		
					GT10-C02H-9SC	GT21 GT2		
				User preparing RS-422/485 connection diagram 5)	GT15-RS4-TE	GT27 GT25		
				User preparing RS-422/485 connection diagram 14)	- (Built into GOT)	GT21 GT2 GT2		

*1 Product manufactured by IAI Corporation. For details of the product, contact IAI Corporation.
*2 Product manufactured by Tyco Electronics. For details of the product, contact Tyco Electronics.
*3 Product manufactured by MITSUBISHI ELECTRIC ENGINEERING COMPANY LIMITED. For details of the product, contact MITSUBISHI ELECTRIC ENGINEERING COMPANY LIMITED.
*4 Use ERC2-□-□-□-□-□-SE-□-□.
*5 Use the following models.
ERC2-□-□-□-□-□-NP-□-□, ERC2-□-□-□-□-□-PN-□-□

(b) ERC2 (NP/PN specifications) only

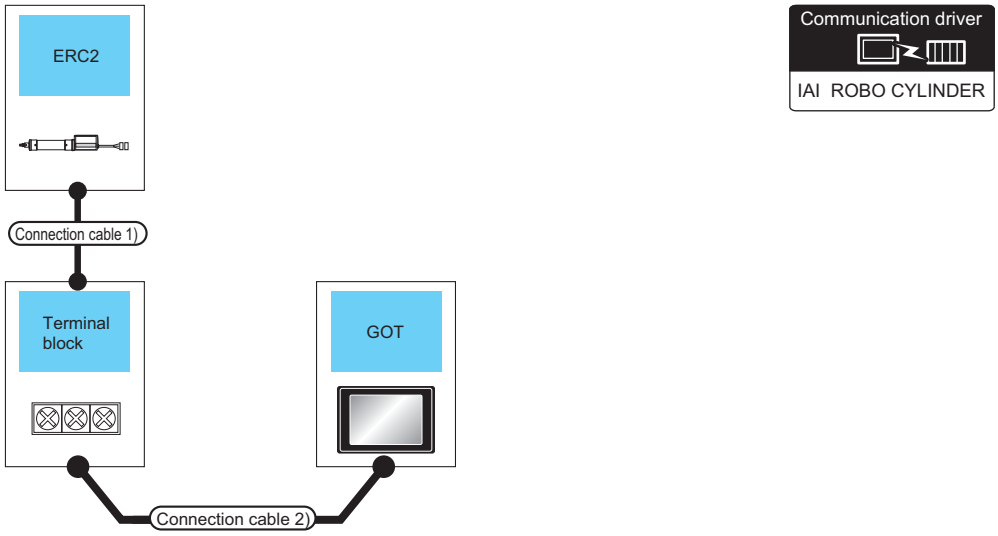

Controller	Connection cable 1)*1	Terminal block	Connection cable 2)	GOT		Max. distance	Number of connectable equipment
Model name	Cable model		Connection diagram number	Option device	Model		
ERC2 (NP/PN specifications)*3	CB-ERC-PWBIO □□□ or CB-ERC-PWBIO □□□-RB	Terminal block (User preparing)	User preparing RS-422/485 connection diagram 10)	FA-LTBGT2R4CBL05(0.5m)*2 FA-LTBGT2R4CBL10(1m)*2 FA-LTBGT2R4CBL20(2m)*2	GT27 GT25 GT23	100m	16 Controllers for 1 GOT
			User preparing RS-422/485 connection diagram 11)	- (Built into GOT)	GT27 GT25 GT23 GT21 GS		
				GT15-RS4-9S	GT27 GT25		
				GT10-C02H-9SC	GT21 GT21		
			User preparing RS-422/485 connection diagram 12)	GT15-RS4-TE	GT27 GT25		
			User preparing RS-422/485 connection diagram 15)	- (Built into GOT)	GT21 GT21 GT21		

*1 Product manufactured by IAI Corporation. For details of the product, contact IAI Corporation.

*2 Product manufactured by MITSUBISHI ELECTRIC ENGINEERING COMPANY LIMITED. For details of the product, contact MITSUBISHI ELECTRIC ENGINEERING COMPANY LIMITED.

*3 Use the following models.
ERC2-□-□-□-□-□-NP-□-□, ERC2-□-□-□-□-□-PN-□-□

■2. When connecting to multiple controllers

(1) PCON, ACON, SCON, ERC2 (SIO specifications), ERC2 (NP/PN specifications)

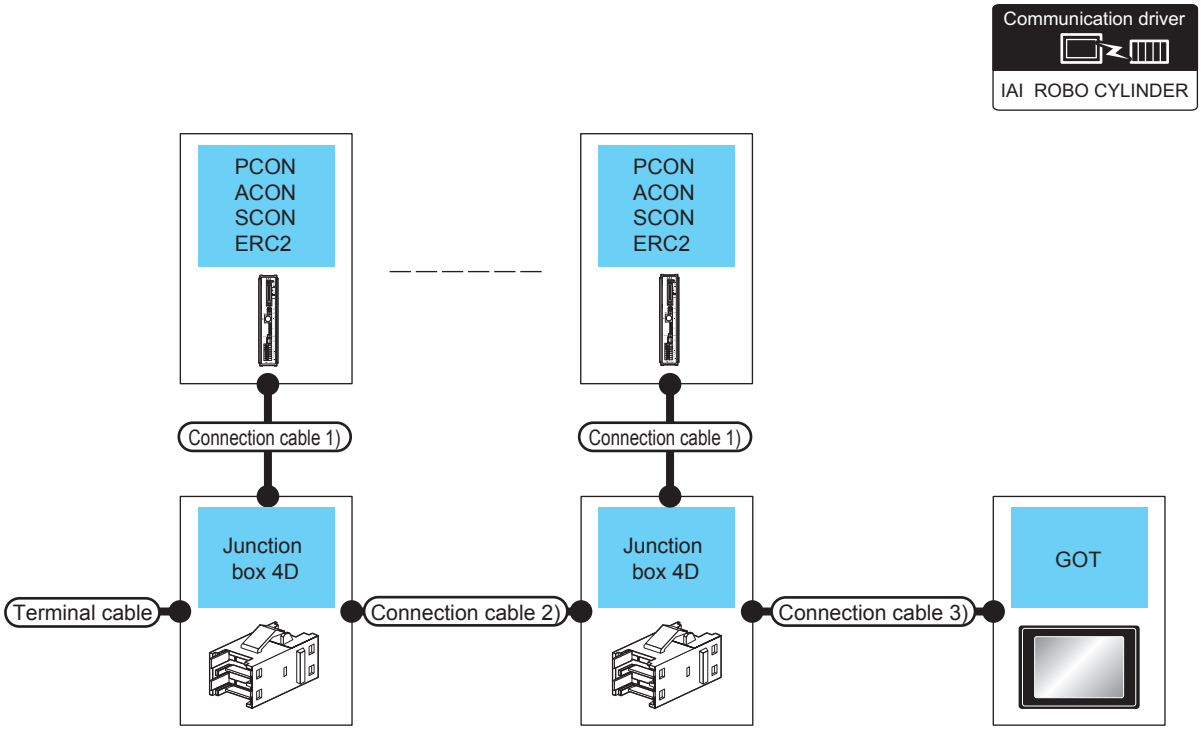

Controller	Terminal cable	Connection cable 1)*1	Junction box 4D*2	Connection cable 2)	Connection cable 3)	GOT		Max. disatance	Number of connectable equipment
Model name	Connection diagram number	Cable model	Model name	Connection diagram number	Connection diagram number	Option device	Model		
PCON ACON SCON ERC2 (NP/PN specifications) *5	User preparing RS-422/485 connection diagram 1)	CB-RCB-CTL002 (0.2m)	5-1473574-4	User preparing RS-422/485 connection diagram 2)	User preparing RS-422/485 connection diagram 3)	FA-LTBGT2R4CBL05(0.5m)*3 FA-LTBGT2R4CBL10(1m)*3 FA-LTBGT2R4CBL20(2m)*3	GT27 GT25 GT23	100m	16 Controllers for 1 GOT
					User preparing RS-422/485 connection diagram 4)	- (Built into GOT)	GT27 GT25 GT23 GT21(05Q) GS		
						GT15-RS4-9S	GT27 GT25		
						GT10-C02H-9SC	GT21(04R) GT21(03P 04P R4)		
					User preparing RS-422/485 connection diagram 5)	GT15-RS4-TE	GT27 GT25		
					User preparing RS-422/485 connection diagram 14)	- (Built into GOT)	GT21(04R) GT21(03P 04P ET/R4) GT21(03P 04P R4)		

Controller	Terminal cable	Connection cable 1)*1	Junction box 4D*2	Connection cable 2)	Connection cable 3)	GOT		Max. disatance	Number of connectable equipment
Model name	Connection diagram number	Cable model	Model name	Connection diagram number	Connection diagram number	Option device	Model		
ERC2 (SIO specifications) *4	User preparing RS-422/485 connection diagram 1)	CB-ERC2-CTL001 + CB-ERC2-PWBIO □□□ or CB-ERC2-PWBIO □□□ -RB	5-1473574-4	User preparing RS-422/485 connection diagram 2)	User preparing RS-422/485 connection diagram 3)	FA-LTBGT2R4CBL05(0.5m)*3 FA-LTBGT2R4CBL10(1m)*3 FA-LTBGT2R4CBL20(2m)*3	GT27 GT25 GT23	100m	16 Controllers for 1 GOT
					User preparing RS-422/485 connection diagram 4)	- (Built into GOT)	GT27 GT25 GT23 GT21(05Q) GS		
						GT15-RS4-9S	GT27 GT25		
						GT10-C02H-9SC	GT21(04R) GT21(03P,04P R4)		
					User preparing RS-422/485 connection diagram 5)	GT15-RS4-TE	GT27 GT25		
					User preparing RS-422/485 connection diagram 14)	- (Built into GOT)	GT21(04R) GT21(03P,04P ET/R4) GT21(03P,04P R4)		

*1 Product manufactured by IAI Corporation. For details of the product, contact IAI Corporation.
*2 Product manufactured by Tyco Electronics. For details of the product, contact Tyco Electronics.
*3 Product manufactured by MITSUBISHI ELECTRIC ENGINEERING COMPANY LIMITED. For details of the product, contact MITSUBISHI ELECTRIC ENGINEERING COMPANY LIMITED.
*4 Use ERC2-□-□-□-□-□-SE-□-□.
*5 Use the following models.
ERC2-□-□-□-□-□-NP-□-□, ERC2-□-□-□-□-□-PN-□-□

(2) ERC2 (NP/PN specifications) only

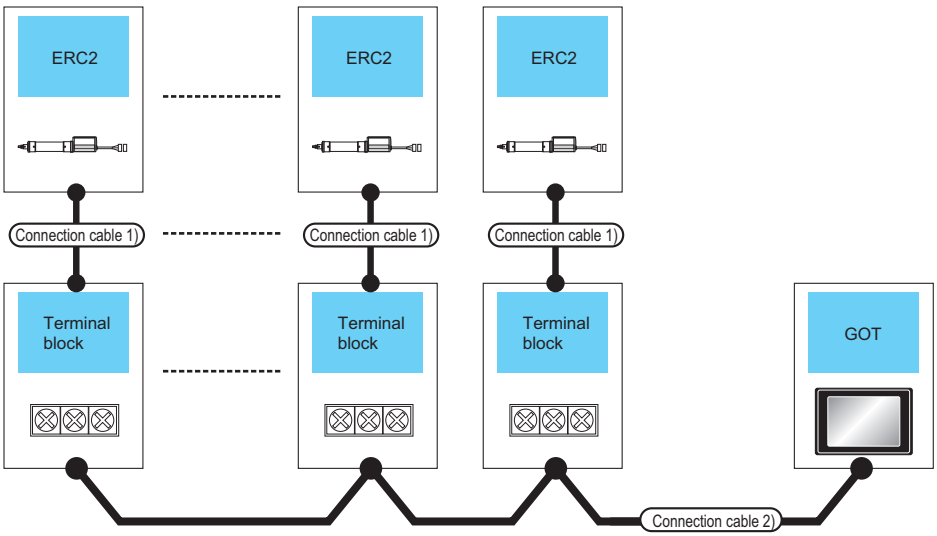

Controller	Connection cable 1)*1	Terminal block	Connection cable 2)	GOT		Max. disatance	Number of connectable equipment
Model name	Cable model		Connection diagram number	Option device	Model		
ERC2 (NP/PN specifications)*4	CB-ERC-PWBIO□□□ or CB-ERC-PWBIO□□□-RB	Terminal block (User preparing)	User preparing RS-422/485 connection diagram 10)	FA-LTBGT2R4CBL05 (0.5m)*2 FA-LTBGT2R4CBL10 (1m)*2 FA-LTBGT2R4CBL20 (2m)*2	GT27 GT25 GT23	100m	16 Controllers for 1 GOT
			User preparing RS-422/485 connection diagram 11)	- (Built into GOT)	GT27 GT25 GT23 GT21 GS		
				GT15-RS4-9S	GT27 GT25		
				GT10-C02H-9SC	GT21 GT21		
			User preparing RS-422/485 connection diagram 12)	GT15-RS4-TE	GT27 GT25		
			User preparing RS-422/485 connection diagram 15)	- (Built into GOT)	GT21 GT21 GT21		

*1 Product manufactured by IAI Corporation. For details of the product, contact IAI Corporation.
*2 Product manufactured by MITSUBISHI ELECTRIC ENGINEERING COMPANY LIMITED. For details of the product, contact MITSUBISHI ELECTRIC ENGINEERING COMPANY LIMITED.
*3 Use the following models.
ERC2-□-□-□-□-□-NP-□-□, ERC2-□-□-□-□-□-PN-□-□

■3. When connecting to multiple controllers (via SIO converter)

(1) PCON, ACON, SCON, ERC2 (SIO specifications), ERC2 (NP/PN specifications)

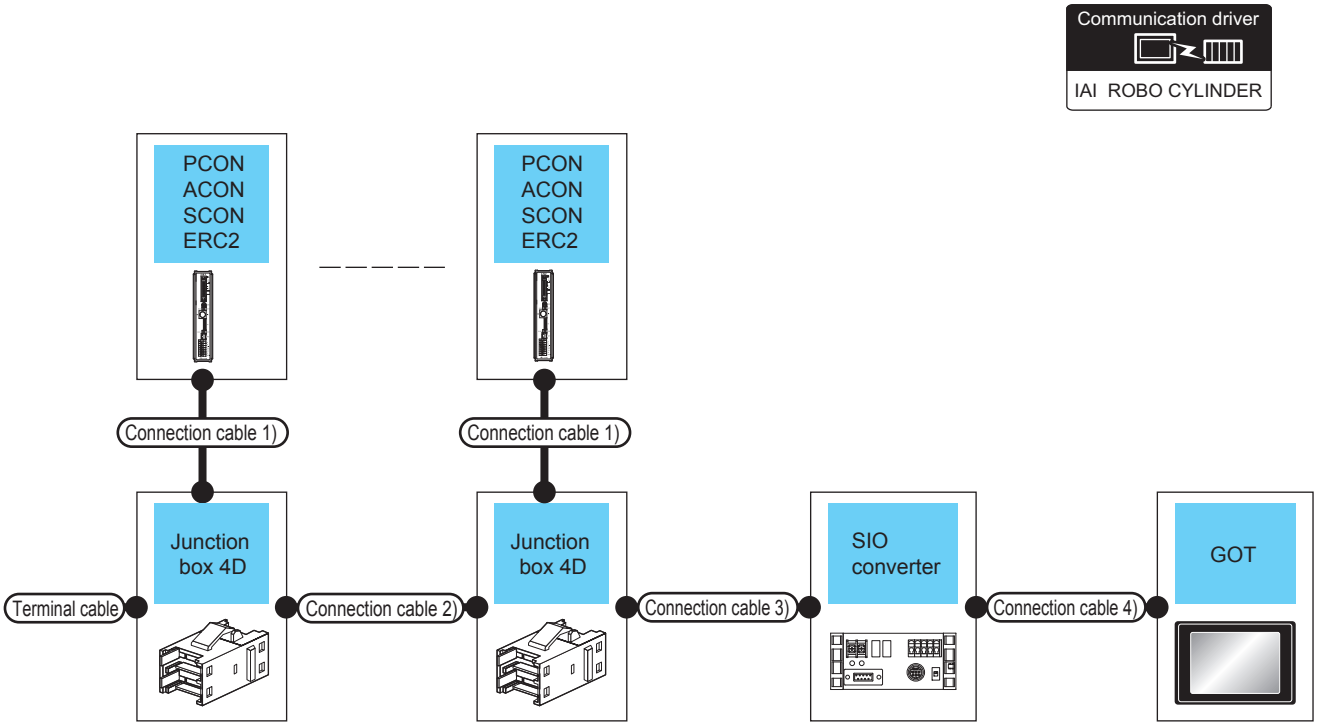

Controller	Terminal cable	Connection cable 1)*1	Junction box 4D*2	Connection cable 2)	Connection cable 3)	Max. disatance	SIO converter*1		Connection cable 4)		GOT		Number of connectable equipment
Model name	Connection diagram number	Cable model	Model name	Connection diagram number	Connection diagram number		Model name	Communication Type	Cable model Connection diagram number	Max. disatance	Option device	Model	
PCON ACON SCON	User preparing RS-422/485 connection diagram 1)	CB-RCB-CTL002 (0.2m)	5-1473574-4	User preparing RS-422/485 connection diagram 2)	User preparing RS-422/485 connection diagram 2) or User preparing RS-422/485 connection diagram 6)	100m	RCB-TU-SIO-□	RS-232	RCB-CV-MW*1 (0.3m) + CB-RCA-SIO050*1 (5m) or User preparing RS-232 connection diagram 3)	15m	- (Built into GOT)	GT27 GT25 GT23 GT21(050) GS	16 Controllers for 1 GOT
											GT15-RS2-9P	GT27 GT25	
											GT10-C02H-6PT9P*6	GT21(03P) (04P) R4 GT21(03P) (04P) R2	
									User preparing RS-232 connection diagram 8)		- (Built into GOT)	GT21(04R) GT21(03P) (04P) R2	

Controller	Terminal cable	Connection cable 1)[*1]	Junction box 4D[*2]	Connection cable 2)	Connection cable 3)	Max. disatance	SIO converter[*1]		Connection cable 4)		GOT		Number of connectable equipment
Model name	Connection diagram number	Cable model	Model name	Connection diagram number	Connection diagram number		Model name	Communication Type	Cable model Connection diagram number	Max. disatance	Option device	Model	
PCON ACON SCON	User preparing RS-422/ 485 connection diagram 1)	CB-RCB-CTL002[*3] (0.2m)	-	-	-	100m	RCB-TU-SIO-□	RS-232	RCB-CV-MW[*1] (0.3m) + CB-RCA-SIO050[*1] (5m) or User preparing RS-232 connection diagram 3)	15m	- (Built into GOT)	GT27 GT25 GT23 GT21050 GS	2 Controllers for 1 GOT
											GT15-RS2-9P	GT27 GT25	
											GT10-C02H-6PT9P[*6]	GT2103P04P R4 GT2103P04P R2	
									User preparing RS-232 connection diagram 8)		- (Built into GOT)	GT2104R GT2103P04P R2	
ERC2 (SIO specifications)[*4]	User preparing RS-422/ 485 connection diagram 1)	CB-ERC2-CTL001 + CB-ERC2-PWBIO□□□ or CB-ERC2-PWBIO□□□-RB	5-1473574-4	User preparing RS-422/ 485 connection diagram 2)	User preparing RS-422/ 485 connection diagram 2) or User preparing RS-422/ 485 connection diagram 6)	100m	RCB-TU-SIO-□	RS-232	RCB-CV-MW[*1] (0.3m) + CB-RCA-SIO050[*1] (5m) or User preparing RS-232 connection diagram 3)	15m	- (Built into GOT)	GT27 GT25 GT23 GT21050 GS	16 Controllers for 1 GOT
											GT15-RS2-9P	GT27 GT25	
											GT10-C02H-6PT9P[*6]	GT2103P04P R4 GT2103P04P R2	
									User preparing RS-232 connection diagram 8)		- (Built into GOT)	GT2104R GT2103P04P R2	

Controller	Terminal cable	Connection cable 1)*1	Junction box 4D*2	Connection cable 2)	Connection cable 3)	Max. disatance	SIO converter*1		Connection cable 4)		GOT		Number of connectable equipment
Model name	Connection diagram number	Cable model	Model name	Connection diagram number	Connection diagram number		Model name	Communication Type	Cable model Connection diagram number	Max. disatance	Option device	Model	
ERC2 (SIO specifications)*4	-	CB-ERC2-CTL001 + CB-ERC2-PWBIO □□□ orv CB-ERC2-PWBIO □□□ -RB	-	-	-	100m	RCB-TU-SIO-□	RS-232	RCB-CV-MW*1 (0.3m) + CB-RCA-SIO050*1 (5m) or User preparing RS-232 connection diagram 3)	15m	- (Built into GOT)	GT27 GT25 GT23 GT21 GS	2 Controllers for 1 GOT
											GT15-RS2-9P	GT27 GT25	
											GT10-C02H-6PT9P*6	GT2103P GT2104P R4 GT2103P GT2104P R2	
									User preparing RS-232 connection diagram 8)		- (Built into GOT)	GT2104R GT2103P GT2104P R2	
ERC2 (NP/PN specifications)*5	User preparing RS-422/485 connection diagram 1)	CB-ERC-PWBIO □□□ or CB-ERC-PWBIO □□□-RB + Terminal block (User preparing) + User preparing RS-422/485 connection diagram 13)	5-1473574-4	User preparing RS-422/485 connection diagram 2)	User preparing RS-422/485 connection diagram 2) or User preparing RS-422/485 connection diagram 6)	100m	RCB-TU-SIO-□	RS-232	RCB-CV-MW*1 (0.3m) + CB-RCA-SIO050*1 (5m) or User preparing RS-232 connection diagram 3)	15m	- (Built into GOT)	GT27 GT25 GT23 GT21 GS	16 Controllers for 1 GOT
											GT15-RS2-9P	GT27 GT25	
											GT10-C02H-6PT9P*6	GT2103P GT2104P R4 GT2103P GT2104P R2	
									User preparing RS-232 connection diagram 8)		- (Built into GOT)	GT2104R GT2103P GT2104P R2	

*1 Product manufactured by IAI Corporation. For details of the product, contact IAI Corporation.
*2 Product manufactured by Tyco Electronics. For details of the product, contact Tyco Electronics.
*3 When not using junction box 4D, connection cable 2) or connection cable 3), connect the controller to the SIO converter directly by the cable CR-RCB-CTL002.
*4 Use ERC2-□-□-□-□-□-SE-□-□.
*5 Use the following models.
ERC2-□-□-□-□-□-NP-□-□, ERC2-□-□-□-□-□-PN-□-□
*6 When a GT10-C02H-6PT9P unit of the sub version A or B is used, do not ground the case of the D-sub (9-pin) connector.

(2) ERC2 (NP/PN specifications) only

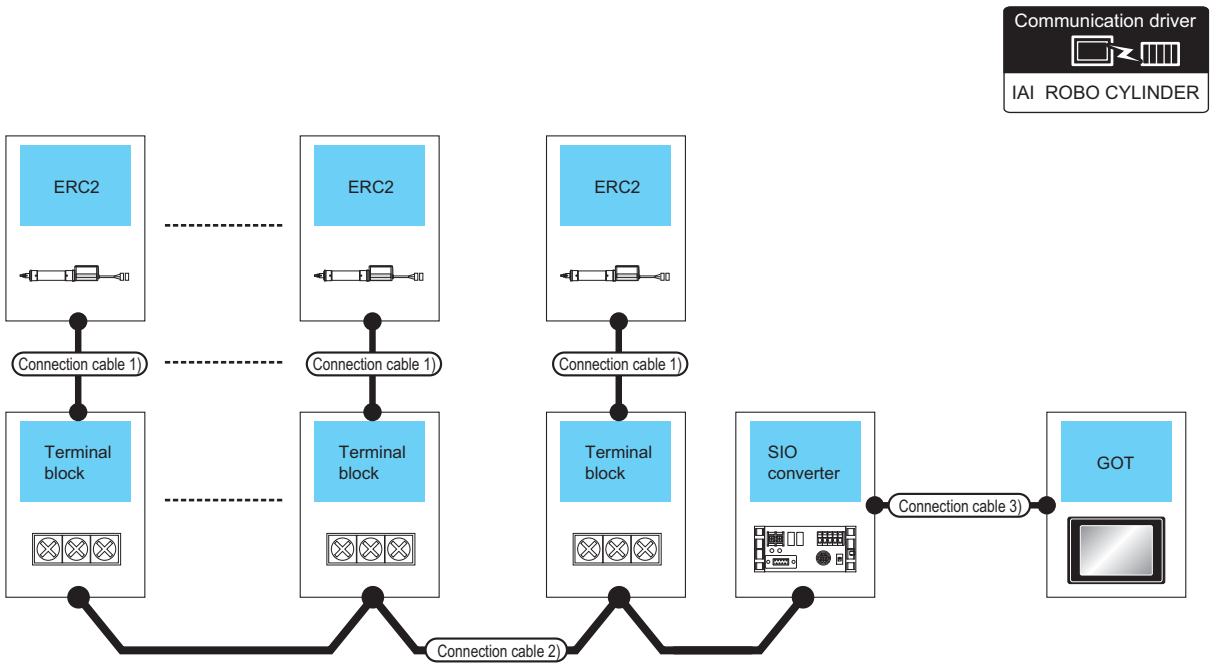

Controller	Connection cable 1)*1	Terminal block	Connection cable 2)	Max. disatance	SIO converter*1		Connection cable 4)		GOT		Number of connectable equipment
Model name	Cable model		Connection diagram number		Model name	Connection diagram number	Cable model Connection diagram number	Max. disatance	Option device	Model*3	
ERC2 (NP/PN specifications) *3	CB-ERC-PWBIO□□□ or CB-ERC-PWBIO□□□-RB	Terminal block (User preparing)	User preparing RS-422/485 connection diagram 13) or User preparing RS-422/485 connection diagram 8)	100m	RCB-TU-SIO-□	RS-232	RCB-CV-MW*1 (0.3m) + CB-RCA-SIO050*1 (5m) or User preparing RS-232 connection diagram 3)	15m	- (Built into GOT)	GT27 GT25 GT23 GT21 GS	16 Controllers for 1 GOT
									GT15-RS2-9P*2	GT27 GT25	
		RC □-TU-PIO*1	User preparing RS-422/485 connection diagram 9)						GT10-C02H-6PT9P *4	GT21 R4 GT21 R2	
							User preparing RS-232 connection diagram 8)		- (Built into GOT)	GT21 GT21 R2	

*1 Product manufactured by IAI Corporation. For details of the product, contact IAI Corporation.

*2 Connect it to the RS-232 interface (built into GOT). It cannot be mounted on GT1655 and GT155□.

*3 Use the following models.
ERC2-□-□-□-□-□-NP-□-□, ERC2-□-□-□-□-□-PN-□-□

*4 When a GT10-C02H-6PT9P unit of the sub version A or B is used, do not ground the case of the D-sub (9-pin) connector.

2.3 Connection Diagram

The following diagram shows the connection between the GOT and the PLC.

2.3.1 RS-232 cable

■1. Connection diagram

(1) RS-232 connection diagram 1)

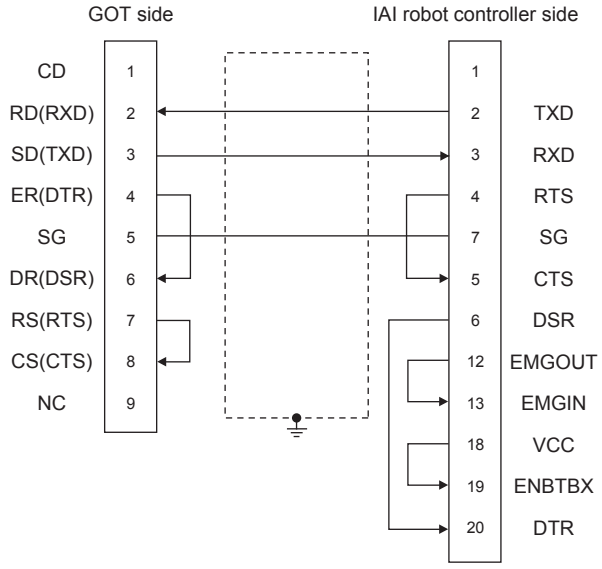

(2) RS-232 connection diagram 2)

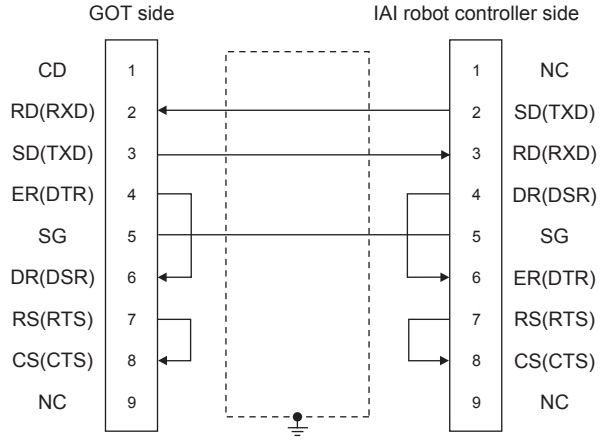

(3) RS-232 connection diagram 3)

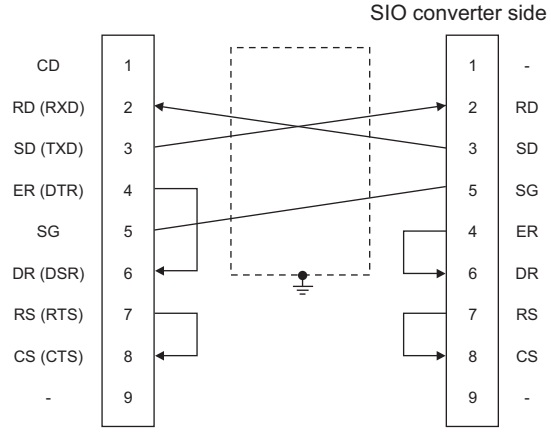

(4) RS-232 connection diagram 4)

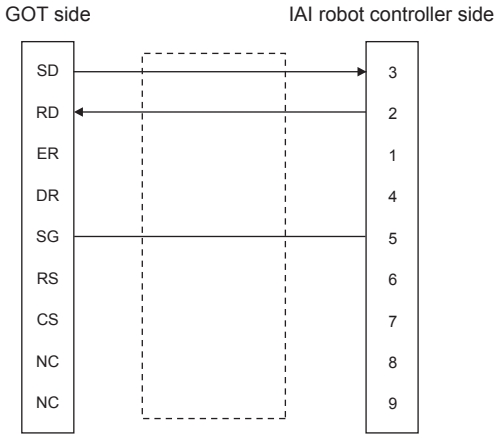

(5) RS-232 connection diagram 5)

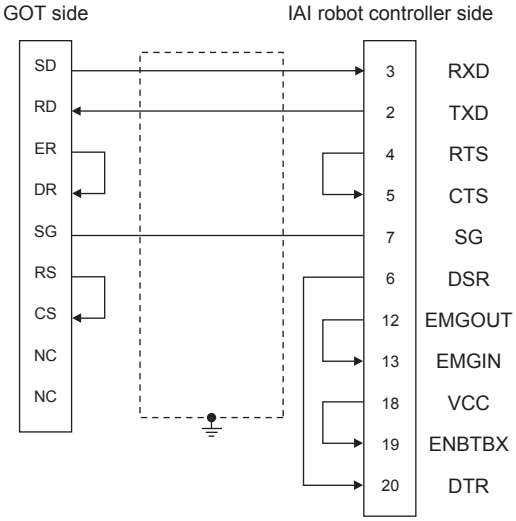

(6) RS-232 connection diagram 6)

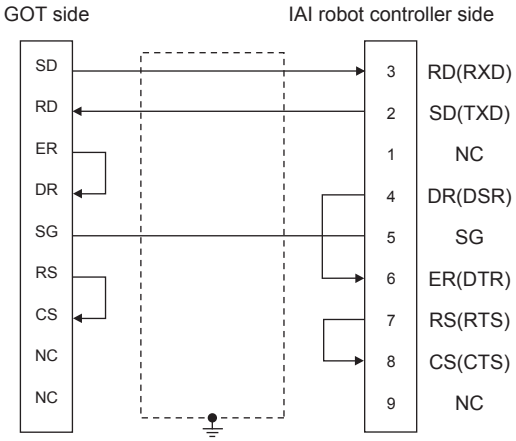

(7) RS-232 connection diagram 7)

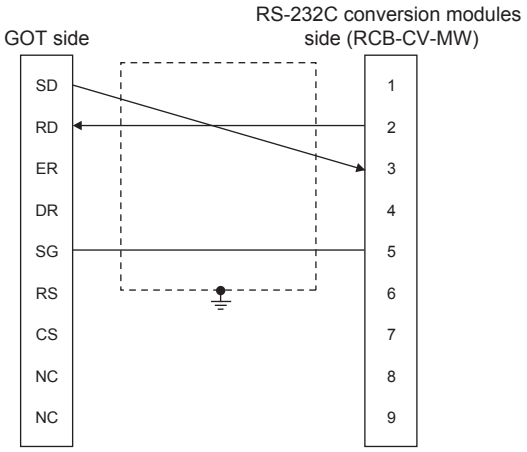

(8) RS-232 connection diagram 8)

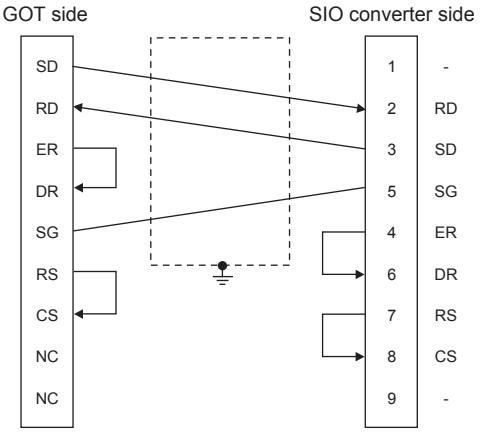

■2. Precautions when preparing a cable

(1) Cable length

The length of the RS-232 cable must be 10cm or less.

(2) GOT side connector

For the GOT side connector, refer to the following.

➠ 1.4.1 GOT connector specifications

(3) IAI Robot Controller side connector

Use the connector compatible with the IAI Robot Controller.
For details, refer to the IAI Robot Controller user's manual.

2.3.2 RS-422/485 cable

■1. Connection diagram

(1) RS-422/485 connection diagram 1)

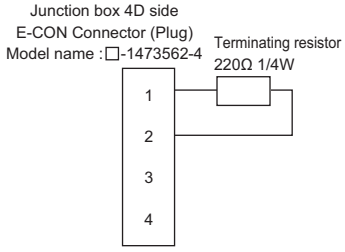

(2) RS-422/485 connection diagram 2)

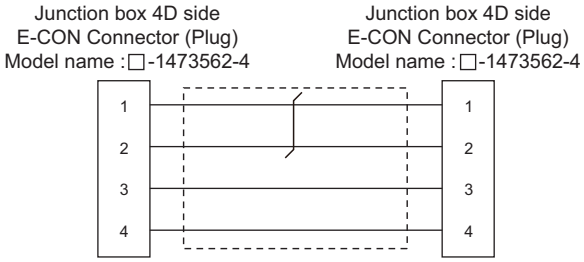

(3) RS-422/485 connection diagram 3)

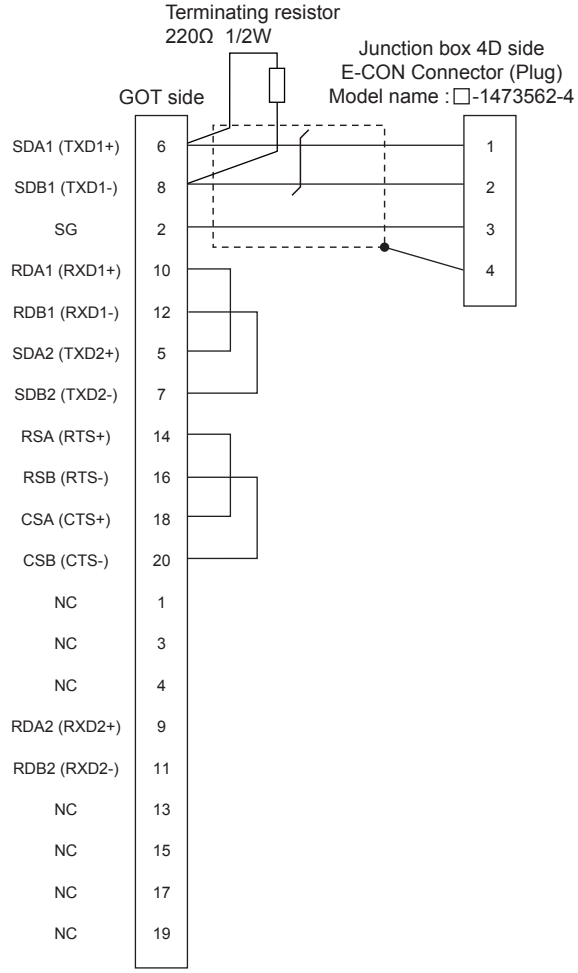

(4) RS-422/485 connection diagram 4)

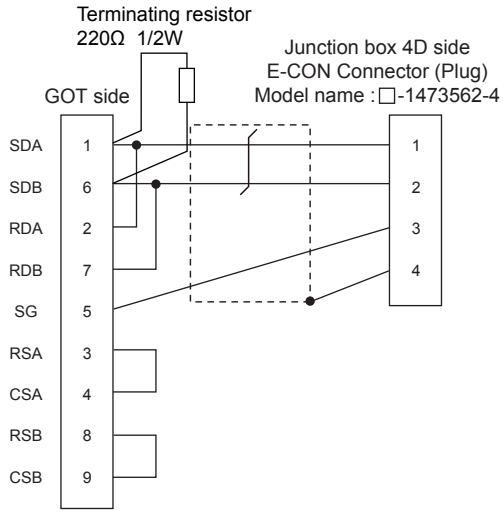

(5) RS-422/485 connection diagram 5)

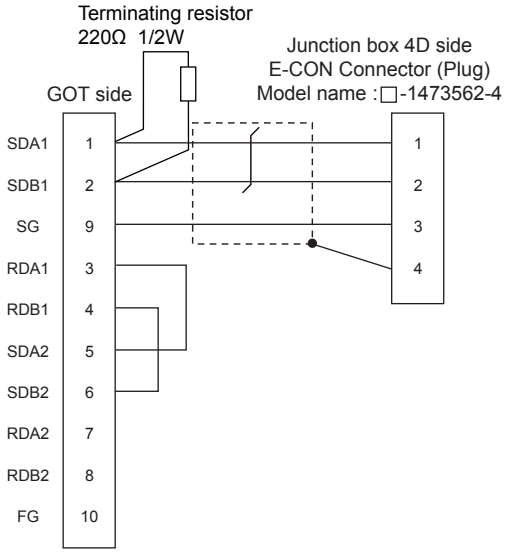

(6) RS-422/485 connection diagram 6)

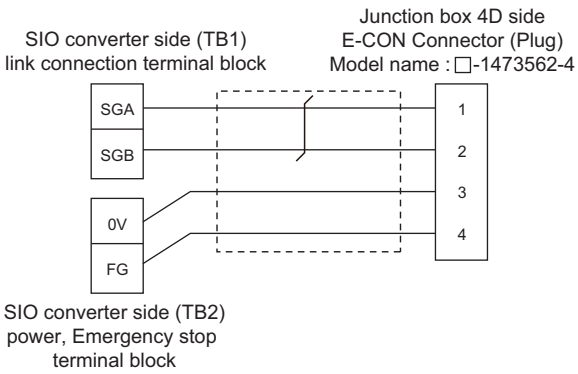

(7) RS-422/485 connection diagram 7)

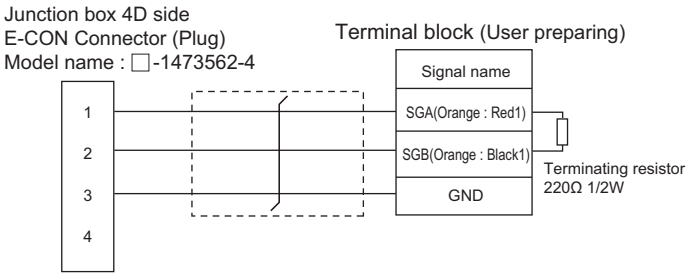

(8) RS-422/485 connection diagram 8)

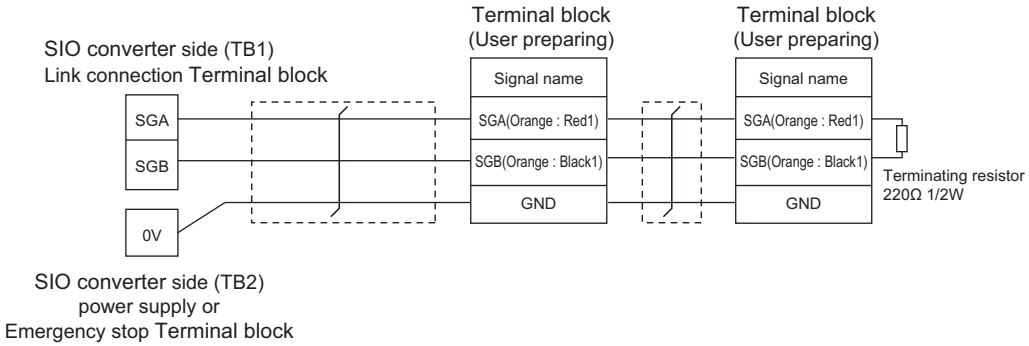

(9) RS-422/485 connection diagram 9)

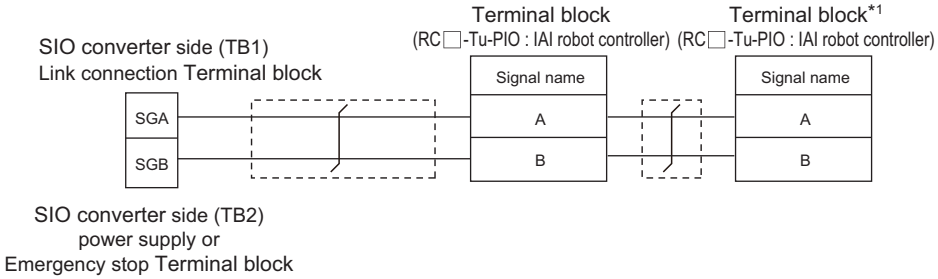

*1 Turn the terminator switch of a terminal block which will be a terminal to "RTON".

(10) RS-422/485 connection diagram 10)

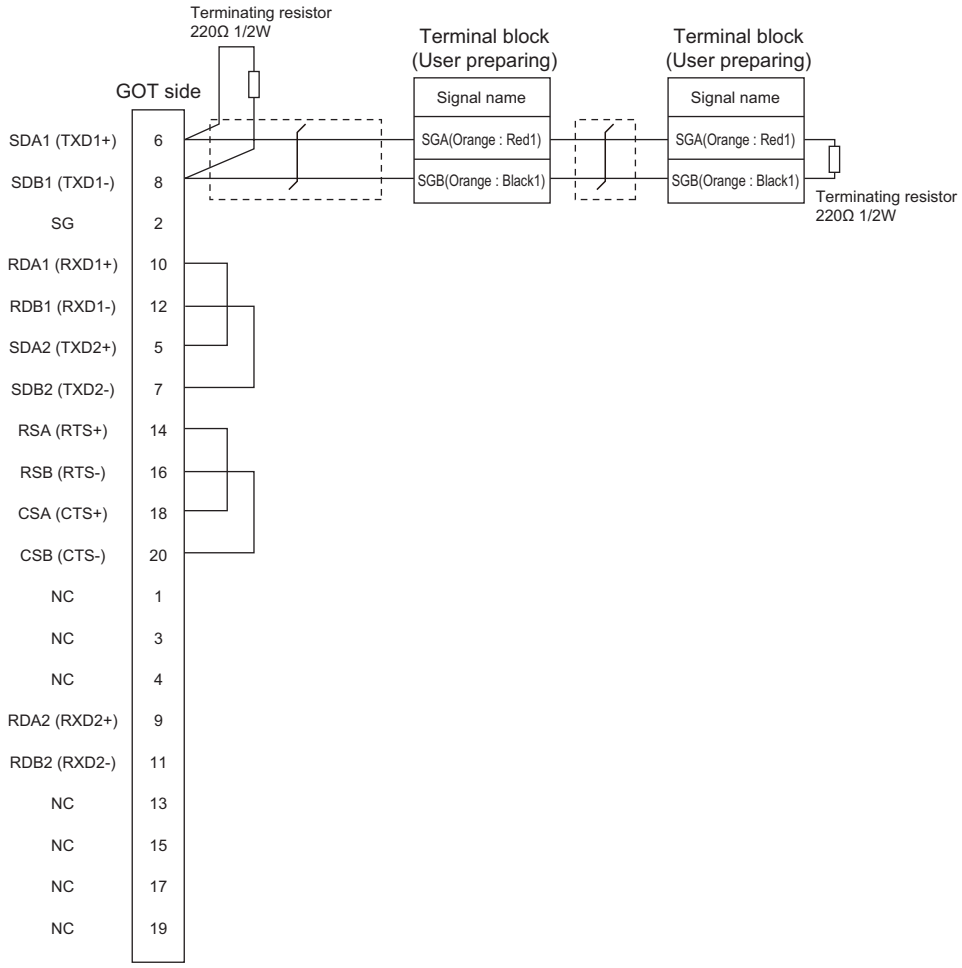

(11) RS-422/485 connection diagram 11)

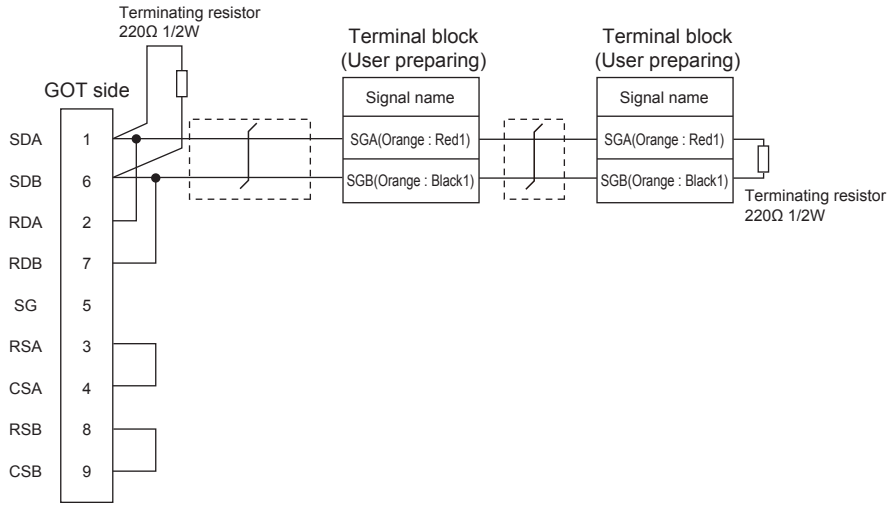

(12) RS-422/485 connection diagram 12)

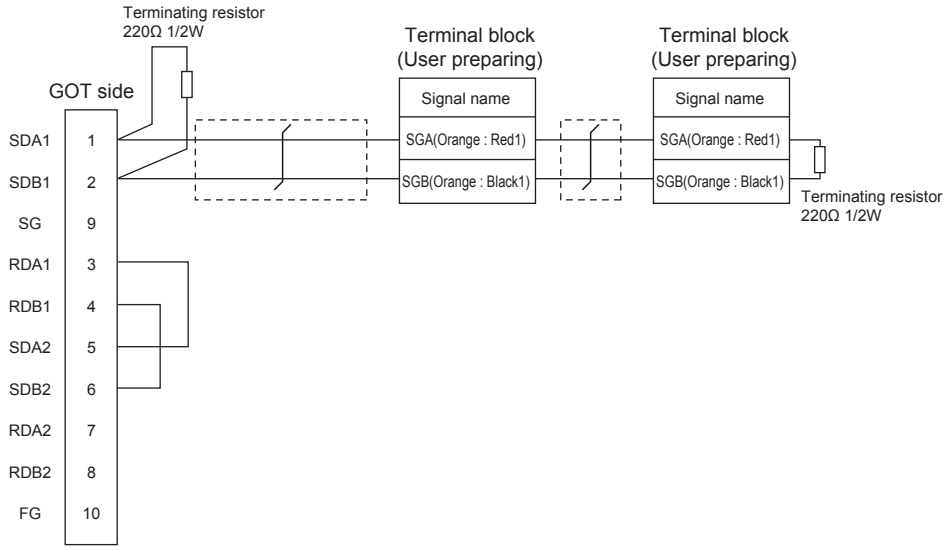

(13) RS-422/485 connection diagram 13)

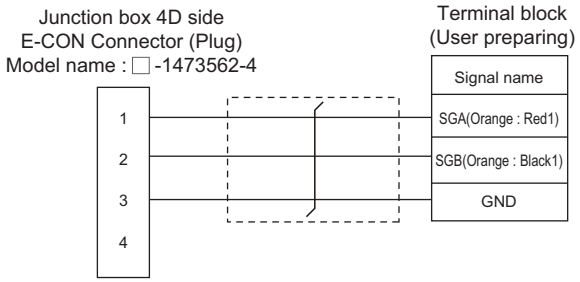

(14) RS-422/485 connection diagram 14)

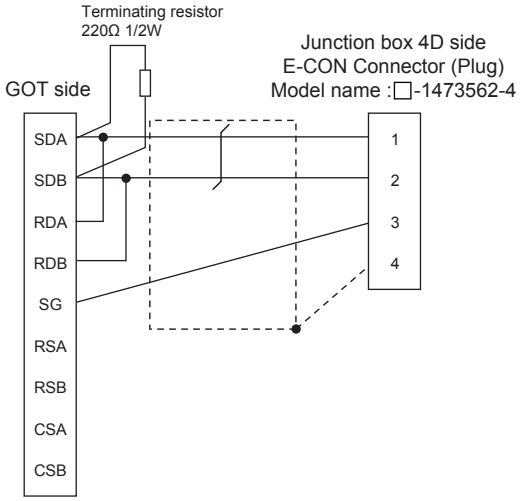

(15) RS-422/485 connection diagram 15)

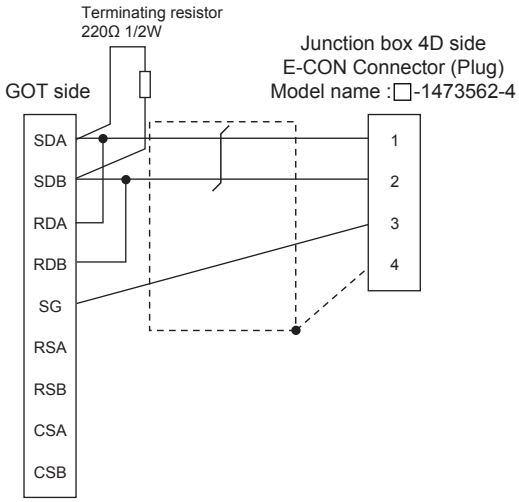

■2. Precautions when preparing a cable

(1) Cable length

The maximum length of the RS-422/485 cable must be 100m or less.

(2) GOT side connector

For the GOT side connector, refer to the following.

➠ 1.4.1 GOT connector specifications

(3) E-CON connector (plug) (Type name: □-1473562-4)

Product manufactured by Tyco Electronics. For details of the product, contact Tyco Electronics.

■3. Connecting terminating resistors

(1) GOT side

When connecting a PLC to the GOT, a terminating resistor must be connected to the GOT.

(a) For GT27, GT25, GT23

Set the terminating resistor setting switch of the GOT main unit to "Disable".

(b) For GT21

Set the terminating resistor selector to "OPEN ".
For the procedure to set the terminating resistor, refer to the following.

➠ 1.4.3 Terminating resistors of GOT

2.4 GOT Side Settings

2.4.1 Setting communication interface (Communication settings)

Set the channel of the equipment to be connected to the GOT.

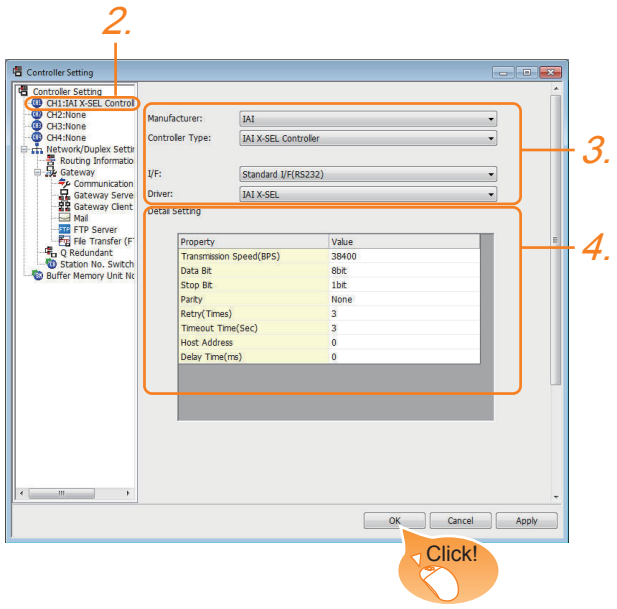

Step 1. Select [Common] → [Controller Setting] from the menu.

Step 2. The Controller Setting window is displayed. Select the channel to be used from the list menu.

Step 3. Set the following items.

- Manufacturer: IAI
- Controller Type: Set either of followings.
  <Connecting to X-SEL, SSEL, ASEL, PSEL>
  IAI X-SEL Controller
  <Connecting to PCON, ACON, SCON, ERC2>
  IAI ROBO CYLINDER
- I/F: Interface to be used
- Driver: Set either of followings.
  <Connecting to X-SEL, SSEL, ASEL, PSEL>
  IAI X-SEL
  <Connecting to PCON, ACON, SCON, ERC2>
  IAI ROBO CYLINDER

Step 4. The detailed setting is displayed after Manufacturer, Controller Type, I/F, and Driver are set.
Make the settings according to the usage environment.

➠ 2.4.2 Communication detail settings

Click the [OK] button when settings are completed.

POINT

The settings of connecting equipment can be confirmed in [I/F Communication Setting].
For details, refer to the following.

➠ 1.1.2 I/F communication setting

2.4.2 Communication detail settings

Make the settings according to the usage environment.

Property	Value
Transmission Speed(BPS)	38400
Data Bit	8 bit
Stop Bit	1 bit
Parity	None
Retry(Times)	3
Timeout Time(Sec)	3
Host Address	0
Delay Time(ms)	0

Item	Description	Range
Transmission Speed	Set this item when change the transmission speed used for communication with the connected equipment. (Default: 38400bps)	9600bps, 19200bps, 38400bps, 57600bps, 115200bps
Data Bit	Set this item when change the data length used for communication with the connected equipment. (Default: 8bits)	7bit, 8bit
Stop Bit	Specify the stop bit length for communications. (Default: 1bits)	1bit, 2bit
Parity	Specify whether or not to perform a parity check, and how it is performed during communication. (Default: None)	None Even Odd
Retry	Set the number of retries to be performed when a communication error occurs. (Default: 3timse)	0 to 5times
Timeout Time	Set the time period for a communication to time out. (Default: 3sec)	1 to 30sec
Host Address	Make the settings according to the station number (station code) of the controller to be monitored. (Default: 0)	<Connecting to X-SEL, SSEL> 0 to 255 <Connecting to PCON, ACON, SCON> 0 to 15
Delay Time	Set this item to adjust the transmission timing of the communication request from the GOT. (Default: 0ms)	0 to 300 (ms)

POINT

(1) Communication interface setting by the Utility

The communication interface setting can be changed on the Utility's [Communication Settings] after writing [Communication Settings] of project data.
For details on the Utility, refer to the following manual.

➠ GOT2000 Series User's Manual (Utility)

(2) Precedence in communication settings

When settings are made by GT Designer3 or the Utility, the latest setting is effective.

POINT

IAI Robot Controller

For details of IAI Robot Controller, refer to the following manuals.

➠ AI Robot Controller user's Manual

2.5.1 Connecting to X-SEL

■1. Parameter setting

Enter the following parameters using peripheral software. When setting parameters, set the mode switch of the controller to "MANU".

Parameter	Parameter Name	Set Value*4
I/O parameter 90	Usage of SIO channel 1*1 opened to user	• When used in "MANU" Set either of the following. 0: SEL opened program 2: IAI protocol B • When used in "AUTO" 2: IAI protocol B
I/O parameter 91	Station code of SIO channel 1*1 opened to user	0 to 255 153*
I/O parameter 92*2	Baud rate type of SIO channel 1*1 opened to user	0: 9600bps* 1: 19200bps 2: 38400bps 3: 57600bps 5: 115200bps
I/O parameter 93	Data length of SIO channel 1*1 opened to user	7bit, 8bit*
I/O parameter 94	Stop bit length of SIO channel 1*1 opened to user	1bit*, 2bit
I/O parameter 95	Parity type of SIO channel 1 *1 opened to user	0: None* 1: Odd 2: Even
I/O parameter 97 *3	IAI-protocol minimum response delay for SIO channel 1*1 opened to user	0 to 999(ms)
Other parameter 46	Other setting bit pattern 1	bit0 to 3 = 1 (fixed)

*1 For X-SEL(P/Q/PX/QX), the parameter becomes the SIO channel 0 opened to user.

*2 Indicates only the transmission that can be specified on the GOT side.
Specify the transmission speed to match the baud rate of the GOT.

*3 Set it only when a wait time is required before the response and transmission to the GOT request. Normally, the communication is available using default values.

*4 When using the "MANU" mode, the set value is fixed to the value with *. Adjust the settings of the GOT side to the * settings. However, the communication setting of the PC software becomes the setting of X-SEL after the PC software for X-SEL is connected. In this case, adjust the communication setting of the GOT to the setting of the PC software.

■2. Mode switch

(1) X-SEL K type

(a) When setting the mode switch to "MANU"

Connect the GOT to the following teaching connector.

(b) When setting the mode switch to "AUTO"

Connect the GOT to the following general RS232C port connector.

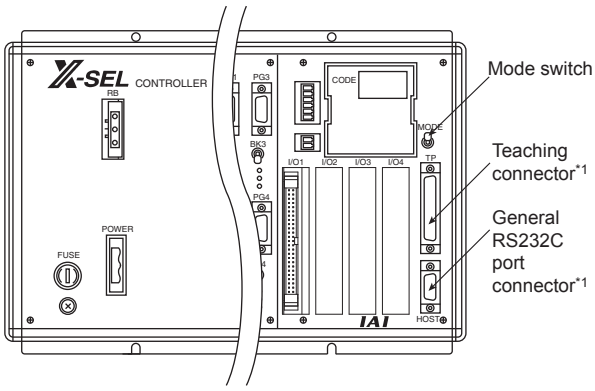

*1 The teaching connector and general RS232C port connector cannot be used at the same time.

(2) Other than X-SEL K type

Set the mode switch to "MANU" or "AUTO" and connect the GOT to the following teaching connector.

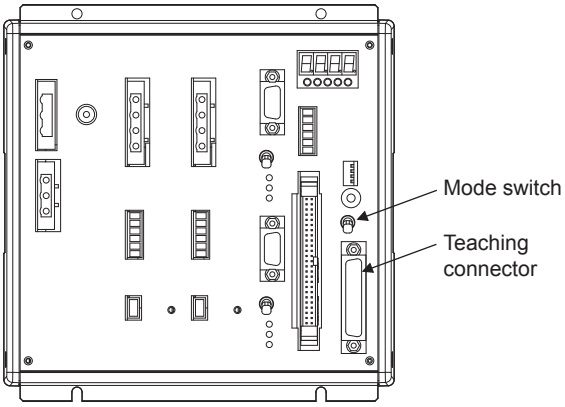

2.5.2 Connecting to SSEL, ASEL, PSEL

■1. Parameter setting

Enter the following parameters using peripheral software. When setting parameters, set the mode switch of the controller to "MANU".

Parameter	Parameter Name	Set Value
I/O parameter 90	Usage of SIO channel 0 opened to user	2: IAI protocol B (fixed)
I/O parameter 91	Station code of SIO channel 0 opened to user	0 to 255
I/O parameter 92*1	Baud rate type of SIO channel 0 opened to user	0: 9600bps 1: 19200bps 2: 38400bps 3: 57600bps 5: 115200bps
I/O parameter 93	Data length of SIO channel 0 opened to user	7bit, 8bit
I/O parameter 94	Stop bit length of SIO channel 0 opened to user	1bit, 2bit
I/O parameter 95	Parity type of SIO channel 0 opened to user	0: None 1: Odd 2: Even
I/O parameter 97 *2	IAI-protocol minimum response delay for SIO channel 0 opened to user	0 to 999(ms)
Other parameter 46	Other setting bit pattern 1	bit0 to 3 = 1 (fixed)

*1 Indicates only the transmission that can be specified on the GOT side.
Specify the transmission speed to match the baud rate of the GOT.

*2 Set it only when a wait time is required before the response and transmission to the GOT request. Normally, the communication is available using default values.

■2. Mode switch

Set the mode switch to "AUTO" and connect the GOT to the following teaching connector.

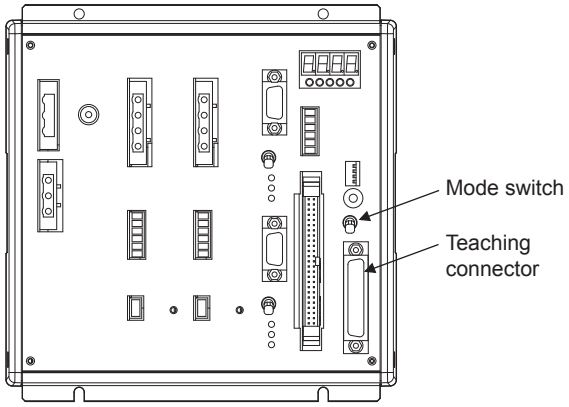

2.5.3 Connecting to PCON, ACON, SCON

■1. Axis number setting, Mode select

For controllers without the following switches, set from the setting tool (PC software).

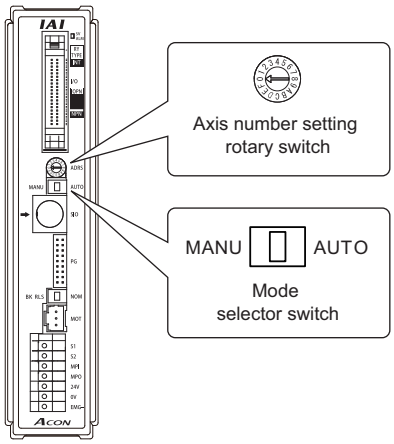

Switch	Setting details
Axis number setting rotary switch	0 to 15
Mode selector switch	<Only the monitor> AUTO <monitor, data change> MANU

■2. Transmission speed setting

Set the transmission speed from the setting tool (PC software).

Item	Range
SIO transmission speed*1	9600/19200/38400/57600/115200bps Default: 38400bps

*1 Indicates only the transmission speeds that can be set on the GOT side.
Set the same transmission speed of the GOT.

2.5.4 Connecting to ERC2

■1. Axis number setting, Mode select

Set from the setting tool (PC software).

■2. Transmission speed setting

Set the transmission speed from the setting tool (PC software).

Item	Range
SIO transmission speed*1	9600/19200/38400/57600/115200bps Default: 38400bps

*1 Indicates only the transmission speeds that can be set on the GOT side.
Set the same transmission speed of the GOT.

2.5.5 Station No.settings

Set each station number so that no station number overlaps.
The station number can be set without regard to the cable connection order. There is no problem even if station numbers are not consecutive.

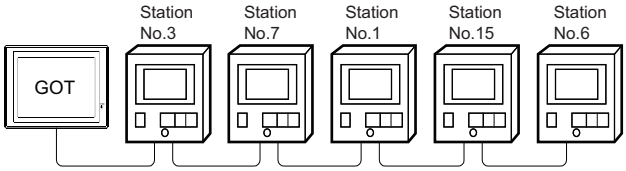

Examples of station number setting

■1. Direct specification

When setting the device, specify the station number of the controller of which data is to be changed.

Model name	Specification range	Refer to
PCON, ACON, SCON	0 to 15	2.5.3
ERC2	0 to 15	2.5.4

■2. Indirect specification

When setting the device, indirectly specify the station number of the controller of which data is to be changed using the 16-bit GOT internal data register (GD10 to GD25).
When specifying the station No. from 100 to 115 on GT Designer3, the value of GD10 to GD25 compatible to the station No. specification will be the station No. of the controller.

Specification station No.	Compatible device	Setting range
100	GD10	0 to 15 (If setting a value out of the range above, a timeout error occurs.)
101	GD11	
102	GD12	
103	GD13	
104	GD14	
105	GD15	
106	GD16	
107	GD17	
108	GD18	
109	GD19	
110	GD20	
111	GD21	
112	GD22	
113	GD23	
114	GD24	
115	GD25	

2.6 Device Range that Can Be Set

The device ranges of controller that can be used for GOT are as follows.
Note that the device ranges in the following tables are the maximum values that can be set in GT Designer3.
The device specifications of controllers may differ depending on the models, even though belonging to the same series.
Please make the setting according to the specifications of the controller actually used.
When a non-existent device or a device number outside the range is set, other objects with correct device settings may not be monitored.

2.6.1 IAI robot controller (IAI X-SELController)

■1. Setting item

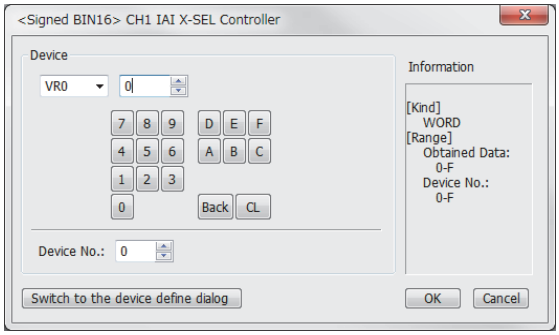

Item	Description	
Device	Set the device name, device number, and bit number. The bit number can be set only when specifying the bit of word device.	
	Device No.	Set the number of the program for which the device is used.
	Information	Displays the device type and setting range which are selected in [Device].
Switch to the device dfine dialog	Device definition can be checked.	

POINT

Memory area for writing position data

Position data can be written to RAM or E^2PROM of the controller.

(1) When written to RAM
Remember that written position data are cleared when power supply to the controller is turned off.

(2) When written to E^2PROM
Written position data are not cleared even when power supply to the controller is turned off.
However, there are limits in the number of writing to E^2PROM. If the data is frequently updated (more than once in an hour), write the parameters to the RAM. For details, refer to the manual of the controller used.

■2. Device

Device name		Setting Range	Device No. representation
Bit device	Input Port (IP)[*1]	IP000 to IP299	Decimal
	Output Port (OP)	OP300 to OP599	
	Flag (FG)	FG000:600 to FG000899 FG001:900 to FG001:999 : FG128:900 to FG128:999	
	Point Data Clear (PCLR)[*2*6]	PCLR0001 to PCLR4E20	Hexadecimal
Word device	Point Data Total Count (PDT)[*1]	PDT0	Decimal
	String (STR)[*3]	STR000:300 to STR000:998 STR001:001 to STR001:299 : STR128:001 to STR128:299	
	Axis Status (AXST)[*1]	AXST00 to AXST2F	Hexadecimal
	Scara Axis Status 0 (Base coordinate system) (SAXS0)[*1]	SAXS000 to SAXS0FF	
	Scara Axis Status 1 (Selected work coordinate system) (SAXS1)[*1]	SAXS100 to SAXS1FF	
	Scara Axis Status 2 (Reserved for system use) (SAXS2)[*1]	SAXS200 to SAXS2FF	
	Scara Axis Status 3 (Each axis system) (SAXS3)[*1]	SAXS300 to SAXS3FF	Hexadecimal
	Version 0 (Main CPU application/) (VR0)[*1]	VR00:0 to VR00:F : VR0F:0 to VR0F:F	
	Version 1 (Main CPU core) (VR1)[*1]	VR10:0 to VR10:F : VR1F:0 to VR1F:F	
	Version 2 (Driver CPU) (VR2)[*1]	VR20:0 to VR20:F : VR2F:0 to VR2F:F	
	Version 3 (Mount SIO) (VR3)[*1]	VR30:0 to VR30:F : VR3F:0 to VR3F:F	
	Program Status (PGST)[*1]	PGST000 to PGST511	Decimal
	System Status (SYST)[*1]	SYST0 to SYST6	
	Program Control (PRG)[*2*4]	PRG000 to PRG128	
	Alarm Reset (AR)[*2]	AR0	Decimal

Device name		Setting Range	Device No. representation
Word device	Software Reset (SR)[*2*5]	SR0	Decimal
	Drive-Source Recovery (DSR)[*2]	DSR0	
	Origin return (RO)[*7]	RO0 to RO3	
	Point number specification movement (PNM)[*7]	PNM0 to PNM5	
	Operation stop/Cancel (OSC)[*7]	OSC0 to OSC2	
Double word device	Operation-Pause Reset (OPR)[*2]	OPR0	
	Servo (SV)[*7]	SV0 to SV2	
	Write to Flash ROM (FRW)[*7]	FRW0 to FRW1	
	Coordinate Affiliate Data 0 (CD0)[*1]	CD000:0 to CD000:F : CD0FF:0 to CD0FF:F	Hexadecimal
	Coordinate Affiliate Data 1 (CD1)[*1]	CD100:0 to CD100:F : CD1FF:0 to CD1FF:F	
	Integer (INT)	INT000:0200 to INT000:1299 INT001:0001 to INT001:1099 : INT128:0001 to INT128:1099	Decimal
	Real (RL)	RL000:0300 to INT000:1399 RL001:0100 to INT001:1199 : INT128:0100 to INT128:1199	
	Jog/inch movement (JIM)[*7]	JIM0 to JIM6	
	Error Detail 0 (System error) (ER0)[*1]	ER000:000:00 to ER0FF:000:FF : ER000:FFF:00 to ER0FF:FFF:FF	Hexadecimal
	Error Detail 1 (Axis-specific error) (ER1)[*1]	ER100:000:00 to ER1FF:000:FF : ER100:FFF:00 to ER1FF:FFF:FF	
	Error Detail 2 (Program-specific error:) (ER2)[*1]	ER200:000:00 to ER2FF:000:FF : ER200:FFF:00 to ER2FF:FFF:FF	
	Error Detail 3 (Error in error list record)(ER3)[*1]	ER300:000:00 to ER3FF:000:FF : ER300:FFF:00 to ER3FF:FFF:FF	Hexadecimal
	Error Detail 4 (Reserved for system use) (ER4)[*1]	ER400:000:00 to ER4FF:000:FF : ER400:FFF:00 to ER4FF:FFF:FF	
	Error Detail 5 (Reserved for system use) (ER5)[*1]	ER500:000:00 to ER5FF:000:FF : ER500:FFF:00 to ER5FF:FFF:FF	
	Error Detail 6 (Reserved for system use) (ER6)[*1]	ER600:000:00 to ER6FF:000:FF : ER600:FFF:00 to ER6FF:FFF:FF	
	Error Detail 7 (Reserved for system use) (ER7)[*1]	ER700:000:00 to ER7FF:000:FF : ER800:FFF:00 to ER8FF:FFF:FF	
	Point Data Total Count (PD)[*7]	PD00 to PD9E	
	Simple Interference Check Zone Data (SD)[*1]	SD01:0 to SD01:F : SDFF:0 to SDFF:F	

*1 Write disabled

*2 Read disabled

*3 The following restrictions are applied depending on the program number.
- When the program number is 000, the variable number can be only even numbers.
- When the program number is 001 to 128, the variable number can be only odd numbers.

*4 For the program control device, the command to be sent differs depending on the write data. Write data other than the followings are processed as an internal error of GOT.
- Write data 0: Program Exit Command(0x254)
- Write data 1: Program Execution Command(0x253)
- Write data 2: Program Pause Command(0x255)
- Write data 3: Program 1 Step Execution Command(0x256)
- Write data 4: Program Restart Command(0x257)

*5 When performing software reset, a no response error is displayed after a non-communicating period of ten and several seconds, and then the communication is resumed.

*6 For the word address, the value is specified only when the last digit is 1.

*7 For the device whose obtained data No.0 is a command trigger, a request is sent to the controller when the Write or Read is input to the command trigger. It is not sent when the Clear is input.

POINT

Device representation

(1) Flag device

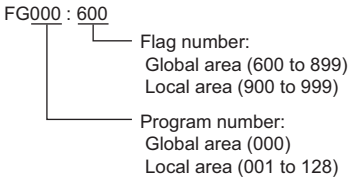

(2) String device

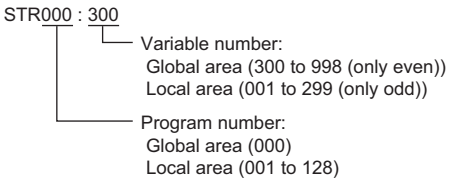

(3) Version device

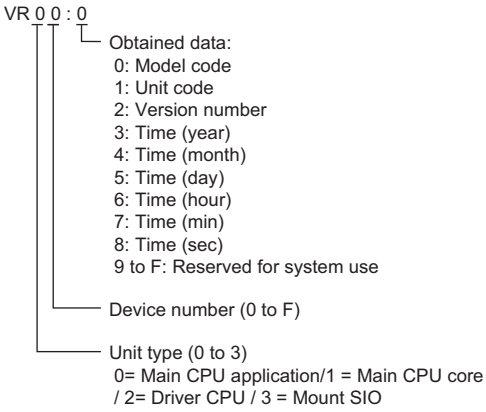

(4) Axis Status device

AXST00
└ Obtained data:
AXST00 to AXST05: Single-axis status
00: Axis status
Bit 7 (Reserved for system use)
Bit 6 (Reserved for system use)
Bit 5 (Push error detection): 0 = Not detected / 1 = Detected
Bit 4 (Operation command successful completion):
0 = Not yet complete / 1 = Completed successfully
* Can be used only for completion check after
an operation command.
Bit 3 (Servo): 0 = OFF / 1 = ON
Bit 1-2 (Origin return): 0 = Not yet performed
/ 1 = Returning to origin / 2 = Completed
Bit 0 (Servo axis in use): 0 = Not in use
/ 1 = In use (moving, etc.)
* "Servo axis in use" indicates that a given task has
the right to use the applicable axis.
Therefore, this bit will turn ON in the following conditions:
- When an operation command involving
axis movement is in progress
(including when an axis is moving)
- Servo is starting up from an OFF state
- Servo is shutting down from an ON state
(excluding emergency stop)
- Operation axis is paused
01: Axis sensor input status
Bit 3 (Reserved for system use)
Bit 2 (Origin sensor): 0 = OFF / 1 = ON
Bit 1 (Overrun sensor): 0 = OFF / 1 = ON
Bit 0 (Creep sensor): 0 = OFF / 1 = ON
02: Axis error code
03: Encoder status
Bit 7 (Battery alarm (BA))
Bit 6 (Battery error (BE))
Bit 5 (Multi-rotation error (ME))
Bit 4 (Reserved for system use)
Bit 3 (Counter overflow (OF))
Bit 2 (Count error (CE))
Bit 1 (Full absolute status (FS))
Bit 0 (Overspeed (OS))
04: Current position (L) unit (0.001mm)
Indicates the lower 16 bits of the current position in Hex.
05: Current position (H) unit (0.001mm)
Indicates the upper 16 bits of the current position in Hex.
AXST06 to AXST11: Double axes status
AXST42 to AXST47: Eight axes status

(5) Scara Axis Status device

SAXS 0 00

Obtained data:

00: Work coordinate system selection number

01: Tool coordinate system selection number

02: Common axis status

Bit 7 (Reserved for system use)

Bit 6 (Reserved for system use)

Bit 5 (Reserved for system use)

Bit 4 (Reserved for system use)

Bit 2-3 (Scara axis current position coordinate system type):
0 = Base coordinate system
/ 1 = Selected work coordinate system
/ 2 = Reserved for system use / 3 = Each axis system

Bit 0-1: (Scara axis current arm system):
0 = Right arm system / 1 = Left arm system
/ 2 = Indeterminable / 3 = Reserved for system use

03: Axis pattern

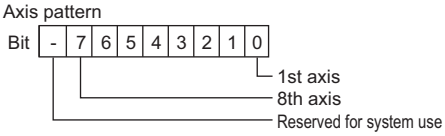

04 to 09: Single-axis status

04: Axis status

Bit 7 (Reserved for system use)

Bit 6 (Reserved for system use)

Bit 5 (Push error detection): 0 = Not detected / 1 = Detected

Bit 4 (Operation command successful completion):
0 = Not yet complete / 1 = Completed successfully
* Can be used only for completion check after an operation command.(For positioning that includes any of the X, Y and R axes, be sure to check completion for all of the X, Y and R axes.)

Bit 3 (Servo): 0 = OFF / 1 = ON

Bit 1-2 (Origin return): 0 = Not yet performed
/ 1 = Returning to origin / 2 = Completed

Bit 0 (Servo axis in use): 0 = Not in use
/ 1 = In use (moving, etc.)
* "Servo axis in use" indicates that a given task has the right to use the applicable axis.Therefore, this bit will turn ON in the following conditions:
- When an operation command involving axis movement is in progress (including when an axis is moving)
- Servo is starting up from an OFF state
- Servo is shutting down from an ON state (excluding emergency stop)
- Operation axis is paused

05: Axis sensor input status

Bit 3 (Reserved for system use)

Bit 2 (Origin sensor): 0 = OFF / 1 = ON

Bit 1 (Overrun sensor): 0 = OFF / 1 = ON

Bit 0 (Creep sensor): 0 = OFF / 1 = ON

06: Axis error code

07: Encoder status

Bit 7 (Battery alarm (BA))

Bit 6 (Battery error (BE))

Bit 5 (Multi-rotation error (ME))

Bit 4 (Reserved for system use)

Bit 3 (Counter overflow (OF))

Bit 2 (Count error (CE))

Bit 1 (Full absolute status (FS))

Bit 0 (Overspeed (OS))

08: Current position (L) unit (0.001mm or 0.001deg)
Indicates the lower 16 bits of the current position in Hex.

09: Current position (H) unit (0.001mm or 0.001deg)
Indicates the upper 16 bits of the current position in Hex.

0A to 0E: Double axes status
. . .

2E to 33: Eight axes status

34 to FF: Reserved for system use

Unit type (0 to F)

Bit 3 (Reserved for system use) Fixed to 0

Bit 2 (Reserved for system use) Fixed to 0

Bit 0-1 (Scara axis current position type):
0 = Base coordinate system
/ 1 = Selected work coordinate system
/ 2 = Reserved for system use / 3 = Each axis system

(6) Program Status device

PGST 000
└ Obtained data:
000 to 003: Program number 1 status
000: Status
Bit 3 (Reserved for system use)
Bit 2 (Reserved for system use)
Bit 1 (Reserved for system use)
Bit 0 (Start): 0 = Not started / 1 = Started
001: Execution program step number
002: Program-dependent error code
003: Error occurrence step number
004 to 007: Program number 2 status
. . .
508 to 511: Program number 128 status

(7) System Status device

SYST 0
└ Obtained data:
0: System mode
0 = Indeterminable / 1 = AUTO mode / 2 = MANUAL mode
/ 3 = Slave update mode / 4 = Core update mode
1 Critical level system error number
2: Latest system error number
3: System status byte 1
Bit 7 (Reserved for system use)
Bit 6 (Battery voltage error status) : 0 = No error / 1 = Error
Bit 5 (Battery voltage low warning status): 0 = No low / 1 = Low
Bit 4 (Power error status): 0 = Normal / 1 = Error
Bit 3 (Emergency stop switch status):
0 = No emergency stop / 1 = Emergency stop
Bit 2 (Safety gate status): 0 = CLOSE / 1 = OPEN
* X-SEL (P/Q Series) (Multi axes/Scara)/SSEL/ASEL/PSEL: Enable switch
(Deadman switch / Enable switch) status is indicated.
Bit 1 (TP enable switch status): 0 = ON / 1 = OFF
* X-SEL (P/Q Series) (Multi axes/Scara)/SSEL/ASEL/PSEL:
This bit is disabled (fixed to 0).
Bit 0 (Operation mode switch status): 0 = AUTO / 1 = MANUAL
4: System status byte 2
Bit 7 (Reserved for system use)
Bit 6 (Reserved for system use)
Bit 5 (Program run status): 0 = Not run / 1 = Running
Bit 4 (Restart wait status): 0 = Not waiting / 1 = Waiting
Bit 3 (I/O interlock status): 0 = No interlock / 1 = Interlock
Bit 2 (Servo interlock status): 0 = No interlock / 1 = Interlock
Bit 1 (Slave parameter writing status):
0 = Not writing / 1 = Writing
Bit 0 (Application data flash ROM write status):
0 = Not writing/erasing / 1 = Writing/erasing
* When the core program is in operation (Application update mode),
only Bit 0 is enabled. Data for System mode, Critical level
system error number, Latest system error number,
System status byte 1, System status byte 3 and System
status byte 4 is disabled.
5: System status byte 3
Bit 7 (Reserved for system use)
Bit 6 (Reserved for system use)
Bit 5 (Reserved for system use)
Bit 4 (Operation mode):
0 = Program mode / 1 = Position mode
Bit 3 (Reserved for system use)
Bit 2 (System ready status): 0 = Not ready / 1 = Ready
Bit 1 (System operation status):
0 = Not operating in AUTO mode
/ 1 = Operating in AUTO mode
Bit 0 (Drive-source cutoff status): 0 = Not cut off / 1 = Cut off
6: System status byte 4
Reserved for system use

(8) Coordinate Affiliate Data device

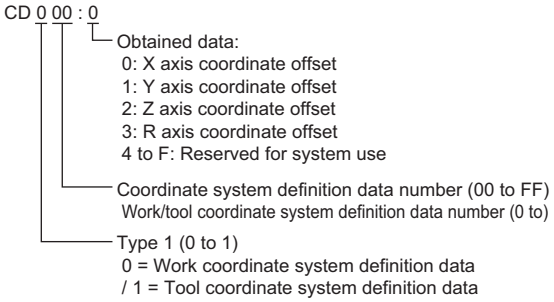

(9) Servo device

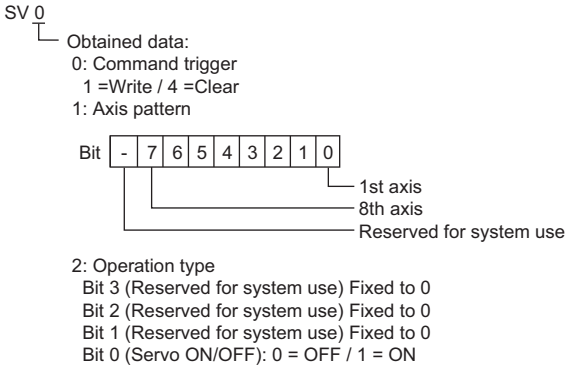

(10)Write to Flash ROM device

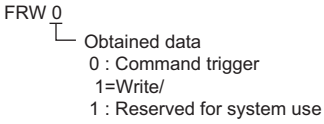

(11)Integer device

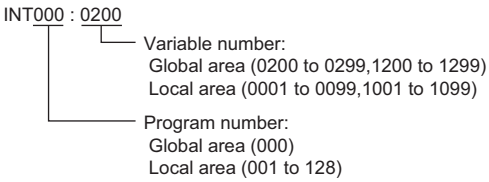

(12)Real device

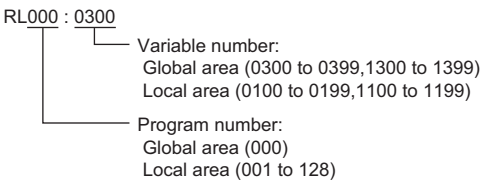

(13)Error Detaildevice(Detail 0 to Detail 7)

ER0 00 : 000 : 00

Obtained data:
00: Error number
01: Detail information 1
Other than system-down level error: Program number
(Error source is indicated if the step number is not 0.)
System-down level error: System down type
02: Detail information 2
Other than system-down level error: Step number
(Error source)
System-down level error: System down error code
03: Detail information 3
Other than system-down level error: Axis number
System-down level error: System down information 1
04: Detail information 4
Other than system-down level error: Point number
(Negative value at interpolation point)
System-down level error: System down information 2
05: Detail information 5
06: Detail information 6
07: Detail information 7
08: Detail information 8
09: Message bytes
0A: Message 1 (4 bytes)
10: Message 2 (4 bytes)
. . .
49: Message 64 (4 bytes)
50 to FF: Reserved for system use

Reserved for system use

Type 2 (0 to FF)
System error: 0 = Critical level error / 1 = Latest error
Axis-specific error: Axis number
Program-specific error: Program number
Error in error list record: Record number (1 to)

Type 1
0 = System error /1 = Axis-specific error
/ 2 = Program-specific error
/ 3 = Error in error list record
/ 4 or later = Reserved for system use

(14)Point Data Total Count device

PD 00

Obtained data:
00: Command trigger
1 =Write / 2 =Read / 4 =Clear
01: Starting point number
02: Number of point data
03 to 0F: Point data 1
03: Point number
04: Axis pattern
05: Acceleration unit (0.01G)
06: Deceleration unit (0.01G)
07: Speed unit (mm/sec)
08 to 0F: Position data unit (0.001 mm)
08: 1st axis position data
. . .
0F: 8th axis position data
10 to 1C: Point data 2
. . .
92 to 9E: Point data 12

(15)Simple Interference Check Zone Data device

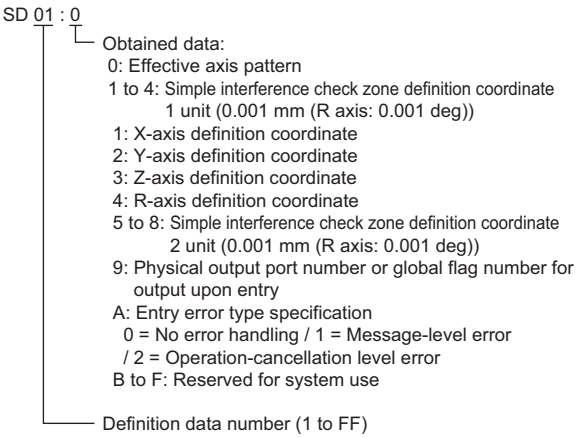

2.6.2 IAI robot controller (IAI PCON, ACON, SCON, ERC2 controller)

■1. Setting item

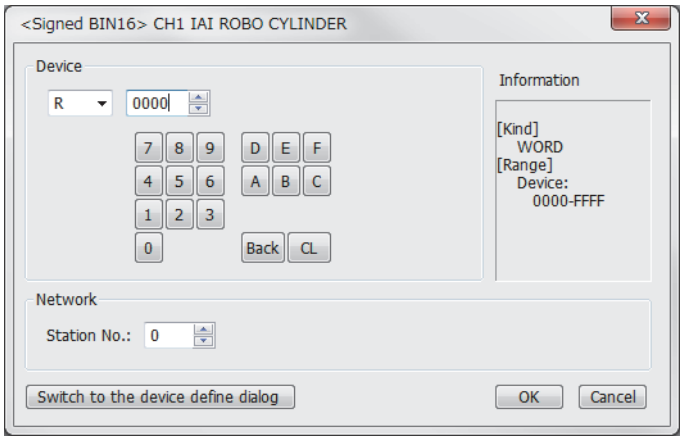

Item	Description	
Device	Set the device name, device number, and bit number. The bit number can be set only when specifying the bit of word device.	
Infomation	Displays the device type and setting range which are selected in [Device].	
Network	Station No.	Monitors the robo cylinder of the specified station No. 0 to 15:To monitor the robo cylinder of the specified station No. 100 to 115:To set the station No. of the robo cylinder to be monitored by the value of GOT data register (GD).*1
Swich to the device define dialog	Device definition can be checked.	

*1 The following shows the relation between station numbers of the robo cylinder and the GOT data register.

Station No.	GOT data register (GD)	Setting range
100	GD10	0 to 15 (If setting a value out of the range above, a timeout error occurs.)
101	GD11	
:	:	
114	GD24	
115	GD25	

■2. Device

(1) Device name

Device name		Setting Range	Device No. representation
Bit device	Status (S)	S0000 to SFFFF	Hexadecimal
	The bit specification of the word device	Setting range of each word device	
Word / Double word device	Register (R)	R0000 to RFFFF	Hexadecimal

(2) Status (S) (Bit device)

The following shows device numbers which can be set for the status and the corresponding device contents.

Status	Area name	Description	Abbreviation
0000 to 00FF	- (Reserved for system)		
0100	Device status register 1 (DSS1)	EMG status	EMGS
0101		Safety speed enabled status	SFTY
0102		Controller ready status	PWR
0103		Servo ON status	SV
0104		Missed work in push-motion operation	PSFL
0105		Major failure status	ALMH
0106		Minor failure status	ALML
0107		Absolute error status	ABER
0108		Brake forced-release status	BKRL
0109		Cannot be used	
010A		Pause status	STP
010B		HomingHome return status	HEND
010C		Positioning completion Position complete status	PEND
010D to 010F		Cannot be used	
0110	Device status register 2 (DSS2)	Cannot be used	
0111		Cannot be used	
0112		Load output judgment status	LOAD
0113		Torque level status	TRQS
0114		Teaching mode status	MODS
0115		Position-data load command status	TEAC
0116		Jog+ status	JOG+
0117		Jog- status	JOG-
0118		Completed positionPosition complete 7	PE7
0119		Completed positionPosition complete 6	PE6
011A		Completed positionPosition complete 5	PE5
011B		Completed positionPosition complete 4	PE4
011C		Completed positionPosition complete 3	PE3
011D		Completed positionPosition complete 2	PE2
011E		Completed positionPosition complete 1	PE1
011F		Completed positionPosition complete 0	PE0
0120	Expansion device status register (DSSE)	Emergency stop status	EMGP
0121		Motor voltage low status	MPUV
0122		Operation mode status	RMDS
0123		Cannot be used	
0124		HomingHome return status	GHMS
0125		Push-motion operation in progress	PUSH
0126		Excitation detection status	PSNS
0127		PIO/Modbus switching status	PMSS
0128		Cannot be used	
0129		Cannot be used	
012A		Moving signal	MOVE
012B to 012F	Expansion device status register (DSSE)	Cannot be used	

Status	Area name	Description	Abbreviation
0130 to 0136	Position number status register (POSS)	Cannot be used	
0137		Completed position numberPosition complete number status bit 256	PM256
0138		Completed position numberPosition complete number status bit 128	PM128
0139		Completed position numberPosition complete number status bit 64	PM64
013A		Completed position numberPosition complete number status bit 32	PM32
013B		Completed position numberPosition complete number status bit 16	PM16
013C		Completed position numberPosition complete number status bit 8	PM8
013D		Completed position numberPosition complete number status bit 4	PM4
013E		Completed position numberPosition complete number status bit 2	PM2
013F		Completed position numberPosition complete number status bit 1	PM1
0140	Zone status register (ZONS)	Cannot be used	
0141		Limit sensor output monitor 2	LS2
0142		Limit sensor output monitor 1	LS1
0143		Limit sensor output monitor 0	LS0
0144 to 0146		Cannot be used	
0147		Position zone output monitor	ZP
0148 to 014D		Cannot be used	
014E		Zone output monitor 2	Z2
014F		Zone output monitor 1	Z1
0150 to 015F	Input port monitor register (DIPM)	PIO connector pin numbers 20A (IN15) to 5A (IN0)	
0160 to 016F	Output port monitor register (DOPM)	PIO connector pin numbers 16B (OUT15) to 1B (OUT0)	
0170	Special input port monitor register (SIPM)	Cannot be used	
0171		Command pulse NP signal status	NP
0172		Cannot be used	
0173		Command pulse PP signal status	PP
0174 to 0175		Cannot be used	
0176		Cannot be used	
0177		Mode switch status	MDSW
0178		Cannot be used	
0179 to 017B		Cannot be used	
017C		Home-check sensor monitor	HMCK
017D		Overtravel sensor	OT
017E		Creep sensor	CREP
017F		Limit sensor	LS
0180 to 03FF	- (Reserved for system)		

Status	Area name	Description	Abbreviation
0400	Device control register 1 (DRG1)	EMG operation specification	EMG
0401		Safety speed command	SFTY
0402		Cannot be used	
0403		Servo ON command	SON
0404 to 0406		Cannot be used	
0407		Alarm reset command	ALRS
0408		Brake forced-release command	BKRL
0409		Cannot be used	
040A		Pause command	STP
040B		HomingHome return command	HOME
040C		Positioning start command	CSTR
040D to 040F		Cannot be used	
0410	Device control register 2 (DRG2)	Cannot be used	
0411		Jog/inch switching	JISL
0412 to 0413		Cannot be used	
0414		Teaching mode command	MOD
0415		Position data load command	TEAC
0416		Jog+ command	JOG+
0417		Jog- command	JOG-
0418		Start position 7	ST7
0419		Start position 6	ST6
041A		Start position 5	ST5
041B		Start position 4	ST4
041C		Start position 3	ST3
041D		Start position 2	ST2
041E		Start position 1	ST1
041F		Start position 0	ST0
0420 to 0426	Expansion device control register (DRGE)	Cannot be used	
0427		PIO/Modbus switching specification	PMSL
0428 to 042B		Cannot be used	
042C		Deceleration stop	STOP
042D to 042F		Cannot be used	
0430 to 0436	Position number specification register (POSR)	Cannot be used	
0437		Position command bit 256	PC256
0438		Position command bit 128	PC128
0439		Position command bit 64	PC64
043A		Position command bit 32	PC32
043B		Position command bit 16	PC16
043C		Position command bit 8	PC8
043D		Position command bit 4	PC4
043E		Position command bit 2	PC2
043F		Position command bit 1	PC1
0440 to FFFF	- (Reserved for system)		

■3. Register (R) (Word device/Double word device)

The following shows device numbers which can be set for the register and the corresponding device contents.

Register	Data length	Area name	Description		Abbreviation
0000 to 0CFF	- (Reserved for system)				
0D00	Word	I/O control information category	Device control register 1		DRG1
0D01	Word		Device control register 2		DRG2
0D03	Word		Position number specification register		POSR
0D04 to 0FFF	- (Reserved for system)				
1000 to 3FFF		Position table information (low-speed memory area)	Offset (Hex.)		
	Double word		+0000H	Target position	PCMD
	Double word		+0002H	In-position bandPositioning band	INP
	Double word		+0004H	Speed command	VCMD
	Double word		+0006H	Individual zone boundary +	ZNMP
	Double word		+0008H	Individual zone boundary -	ZNLP
	Word		+000AH	Acceleration command	ACMD
	Word		+000BH	Deceleration command	DCMD
	Word		+000CH	Push-current limiting value	PPOW
	Word		+000DH	Load current threshold	LPOW
	Word		+000EH	Control flag specification	CTLF
	(Calculation of detailed device number) Device number (Hex) = 1000H + (16 × Position number (0 to 767))*1 + (Offset value corresponding to the device content) H Example) Position number: 5 Device content: Speed command (Offset value = 0004H) Device number (Hex) = 1000H + (16 × 5 = 80)*1*2 + 0004H = 1000H + 50H*2 + 0004H = 1054H *1 Calculated in decimal. *2 Converting 16 × 5 = 80 to hexadecimal results 50H.				
4000 to 8FFF	- (Reserved for system)				
9000	Double word	Controller monitor information category	Current position monitor		PNOW
9002	Word		Present alarm code query		ALMC
9003	Word		Input port query		DIPM
9004	Word		Output port monitor query		DOPM
9005	Word		Device status 1 query		DSS1
9006	Word		Device status 2 query		DSS2
9007	Word		Expansionded device status query		DSSE
9008	Double word		System status query		STAT
900A	Double word		Current speed monitor		VNOW
900C	Double word		Current ampere monitor		CNOW
900E	Double word		Deviation monitor		DEVI
9010	Double word		System timer query		STIM
9012	Word		Special input port query		SIPM
9013	Word		Zone status query		ZONS
9014	Word		Completed position numberPosition complete number status query		POSS
9015 to 97FF	- (Reserved for system)				
9800	Word	Position command category	Position movement command register		POSR
9801 to 98FF	- (Reserved for system)				

Register	Data length	Area name	Description	Abbreviation
9900	Double word	Numerical value command category	Target position coordinate specification register	PCMD
9902	Double word		In-position bandPositioning band specification register	INP
9904	Double word		Speed specification register	VCMD
9906	Word		Acceleration/deceleration speed specification register	ACMD
9907	Word		Push-current limiting value	PPOW
9908	Word		Control flag specification register	CTLF
9909 to FFFF	- (Reserved for system)			

2.7 Precautions

■1. Program control device

- When Program Execution Command (0), Program Exit Command (2), or Program Restart Command (4) is written to the program control device (PRG 0), it will be a request for all programs running in the controllers.
- When unsupported write data is input to the program control device, the following error is displayed in the system alarm.
  315: Device writing error.
  Correct device.

■2. Variable devices

The variable number 99 of Integer device and variable number 199 of Real device are special devices used for operations by the X-SEL controller system. Do not use these variables for general purpose.

■3. Command trigger compatible device

- For the device whose obtained data No.0 is a command trigger, communication with the controller is performed when the Write(1)/Read(2) is set to the command trigger. When the command trigger and setting value are written in a batch, the communication is performed based on the value set with batch write.
- When Clear(4) is set to the command trigger, the communication with the controller is not performed and the set value is initialized.
- When an unsupported set value is input to the command trigger, the following error is displayed in the system alarm.
  315: Device writing error.
  Correct device.

■4. Device reserved for system use

Devices of "Reserved for system use" are devices with indefinite values. Do not write to these devices.

■5. Write to the flash ROM

- The point data can be written to the flash ROM of the X-SEL controller. When the point data is written to the flash ROM, it is not cleared even when power supply to the controller is turned off. However, there are limits in the number of writing. For details, refer to the user's manual of X-SEL controller used.
- Never turn off the main power supply during the flash ROM write. Doing so may cause the loss of data and malfunction of controllers. For details, refer to the user's manual of X-SEL controller used.

■6. Communication disconnection

- Writing to the flash ROM disconnects the communication with controllers until the writing is completed.
- Resetting software restarts the controllers. During this time, the communication with controllers is disconnected.

■7. Station number setting of the IAI robot controller system

The robot controller with the station number set with the host address must be included.

➠ 2.4.2 Communication detail settings

■8. Connection of the IAI X-SEL K type

Note the following precaution when using the controller with the mode switch set to MANU.

- After powering up the X-SEL, connecting the GOT before the PC software causes the program startup disabled (A1D alarm) on the X-SEL side.

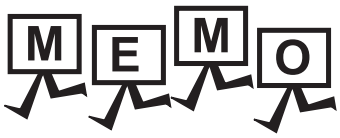
MEMO

3. CONNECTION TO AZBIL (former YAMATAKE) CONTROL EQUIPMENT

3.1 Connectable Model List . . . . . 3 - 2
3.2 System Configuration . . . . . 3 - 4
3.3 Connection Diagram. . . . . 3 - 33
3.4 GOT Side Settings . . . . . 3 - 55
3.5 Control Equipment Side Setting . . . . . 3 - 58
3.6 Device Range that Can Be Set. . . . . 3 - 70
3.7 Precautions . . . . . 3 - 73

3. CONNECTION TO AZBIL CONTROL EQUIPMENT

3.1 Connectable Model List

The following table shows the connectable models.

Series	Model name	Clock	Communication Type	Connectable model	Refer to
DMC	DMC10	×	RS-232 RS-485	GT27 GT25 GT23 GT21	➠ 3.2.1
			RS-232	GS	➠ 3.2.1
	DMC50	×	RS-485	GT27 GT25 GT23 GT21	➠ 3.2.2
SDC	SDC15	×	RS-232 RS-485	GT27 GT25 GT23 GT21	➠ 3.2.3
	SDC25				
	SDC26				
	SDC35				
	SDC36		RS-232	GS	➠ 3.2.1
	SDC20	×	RS-232 RS-485	GT27 GT25 GT23 GT21	➠ 3.2.4
	SDC21		RS-232	GS	➠ 3.2.1
	SDC30	×	RS-232 RS-485	GT27 GT25 GT23 GT21	➠ 3.2.5
	SDC31		RS-232	GS	➠ 3.2.1
	SDC40A	×	RS-232 RS-485	GT27 GT25 GT23 GT21	➠ 3.2.6
	SDC40B				
	SDC40G		RS-232	GS	➠ 3.2.1
	SDC45	×	RS-232 RS-485	GT27 GT25 GT23 GT21	➠ 3.2.7
	SDC46		RS-232	GS	➠ 3.2.1
CMS	CMS	×	RS-232 RS-485	GT27 GT25 GT23 GT21	➠ 3.2.8
			RS-232	GS	➠ 3.2.1
CMF	CMF015	×	RS-232 RS-485	GT27 GT25 GT23 GT21	➠ 3.2.9
	CMF050		RS-232	GS	➠ 3.2.1
CML	CML	×	RS-232 RS-485	GT27 GT25 GT23 GT21	➠ 3.2.10
			RS-232	GS	➠ 3.2.1

Series	Model name	Clock	Communication Type	Connectable model	Refer to
MQV	MQV	×	RS-232 RS-485	GT27 GT25 GT23 GT21	3.2.8
MPC	MPC				3.2.8
MVF	MVF				3.2.8
			RS-232	GS	3.2.1
PBZ	PBC201-VN2	×	RS-232 RS-485	GT27 GT25 GT23 GT21	3.2.10
			RS-232	GS	3.2.1
AUR	AUR350C	×	RS-232 RS-485	GT27 GT25 GT23 GT21	3.2.11
	AUR450C				
			RS-232	GS	3.2.1
RX	RX	×	RS-232 RS-485	GT27 GT25 GT23 GT21	3.2.8
			RS-232	GS	3.2.1
CMC	CMC10B	×	RS-232 RS-485	GT27 GT25 GT23 GT21	3.2.12
			RS-232	GS	3.2.1
AHC2001	AHC2001	×	RS-232 RS-485	GT27 GT25 GT23 GT21	3.2.13
			RS-232	GS	3.2.1
NX	NX-D15	×	RS-232 RS-485 (MODBUS)	GT27 GT25 GT23	3.2.14
	NX-D25				
	NX-D35				
	NX-DX1				
	NX-DX2				
	NX-DY				
	NX-S01				
	NX-S11				
	NX-S12				
	NX-S21				
	NX-D15	×	Ethernet (MODBUS)	GT27 GT25 GT23	3.2.14
	NX-D25				
	NX-D35				
	NX-DX1				
	NX-DX2				
	NX-DY				
	NX-S01				
	NX-S11				
	NX-S12				
	NX-S21				

3.2 System Configuration

3.2.1 Connecting to DMC10

■1. When using the Interface converter

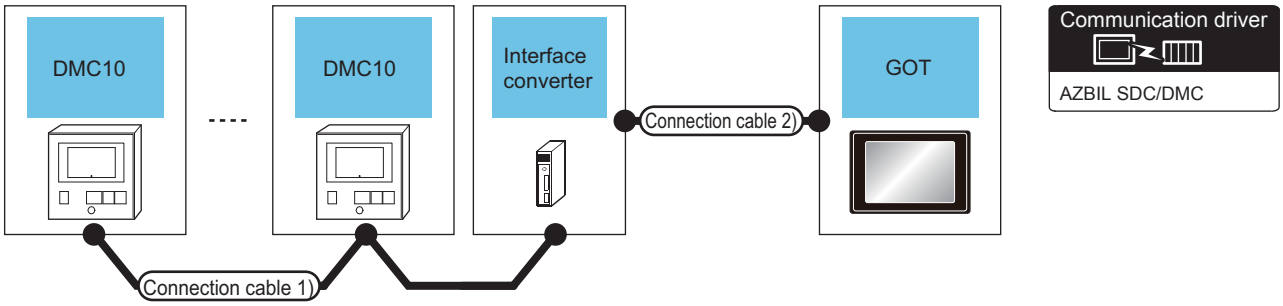

Temperature controller	Connection cable 1)		Interface converter*1		Connection cable 2)		GOT		Number of connectable equipment
Model name	Cable model Connection diagram number	Max. distance	Model name	Communication Type	Cable model Connection diagram number	Max. distance	Option device	Model	
DMC10	User preparing RS485 connection diagram 1)	500m	CMC10L	RS-232	User preparing RS232 connection diagram 1)	15m	- (Built into GOT)	GT27 GT25 GT23 GT21 GS	Up to 15 temperature controllers for 1 GOT
							GT15-RS2-9P	GT27 GT25	
					User preparing RS232 connection diagram 3)	15m	- (Built into GOT)	GT21	

*1 Product manufactured by Azbil Corporation. For details on the product, contact Azbil Corporation.

■2. When connecting directly

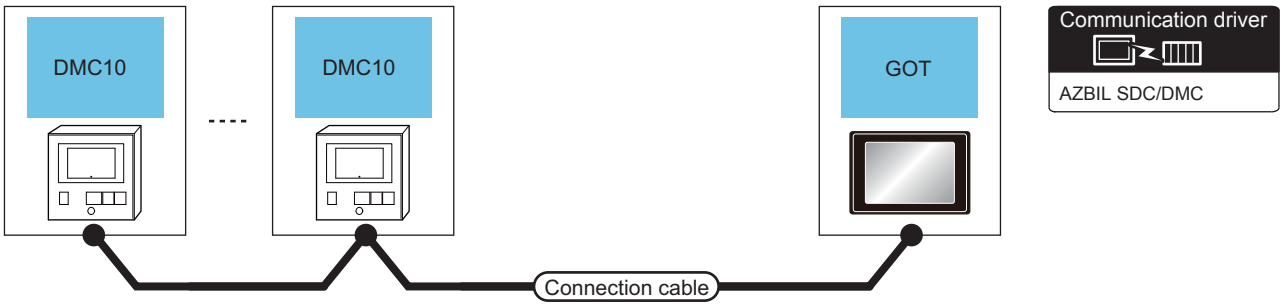

Temperature controller		Connection cable		GOT		Number of connectable equipment
Model name	Communication Type	Cable model Connection diagram number	Max. distance	Option device	Model	
DMC10	RS-485	User preparing RS485 connection diagram 12)	500m	- (Built into GOT)	GT27 GT25 GT23 GT21	Up to 15 temperature controllers for 1 GOT
		User preparing RS485 connection diagram 3)	500m*1	FA-LTBGT2R4CBL05 (0.5m)*2 FA-LTBGT2R4CBL10 (1m)*2 FA-LTBGT2R4CBL20 (2m)*2	GT27 GT25 GT23	
		User preparing RS485 connection diagram 5)	500m	GT15-RS4-TE	GT27 GT25	
		User preparing RS485 connection diagram 21)	500m	- (Built into GOT)	GT2104R GT2103P-2104P-ET/R4 GT2103P-2104P-R4	

*1 Including the cable length of the option devices.

*2 Product manufactured by MITSUBISHI ELECTRIC ENGINEERING COMPANY LIMITED. For details of the product, contact MITSUBISHI ELECTRIC ENGINEERING COMPANY LIMITED.

3.2.2 Connecting to DMC50

■1. When using the COM module

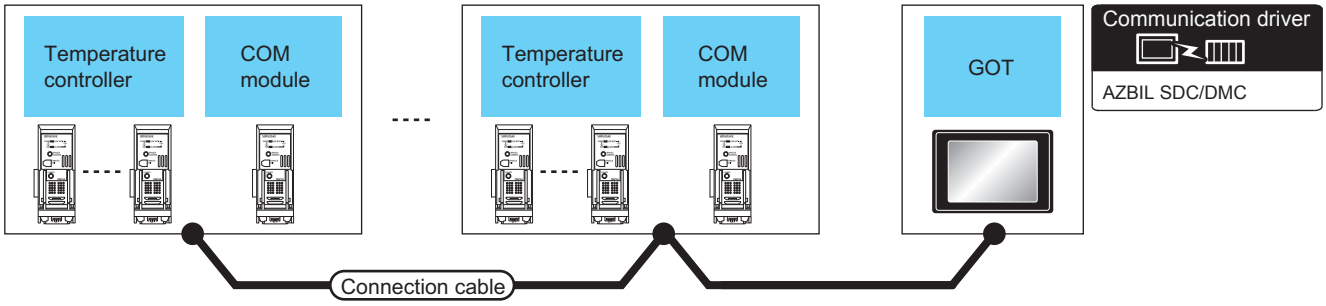

Temperature controller	Connection cable		COM module*1		GOT		Number of connectable equipment
Model name	Connection diagram number	Max. distance	Model name	Communication Type	Option device	Model	
DMC50CX	User preparing RS485 connection diagram 8)	500m*2	DMC50M20X	RS-485	FA-LTBGT2R4CBL05 (0.5m)*3 FA-LTBGT2R4CBL10 (1m)*3 FA-LTBGT2R4CBL20 (2m)*2	GT27 GT25 GT23	Up to 8 COM module for 1 GOT. Up to 120 temperature controllers for 1 COM module.
	User preparing RS485 connection diagram 9)	500m	DMC50M20X	RS-485	- (Built into GOT)	GT27 GT25 GT23 GT21(05Q)	
					GT15-RS4-9S	GT27 GT25	
					GT15-RS4-TE	GT27 GT25	
	User preparing RS485 connection diagram 22)	500m	DMC50M□20X	RS-485	- (Built into GOT)	GT21(04R) GT21(03P04P ET/R4) GT21(03P04P R4)	

*1 Including the cable length of the option devices.
*2 Product manufactured by Azbil Corporation. For details on the product, contact Azbil Corporation.
*3 Product manufactured by MITSUBISHI ELECTRIC ENGINEERING COMPANY LIMITED.For details of the product, contact MITSUBISHI ELECTRIC ENGINEERING COMPANY LIMITED.

■2. When connecting directly to one temperature controller

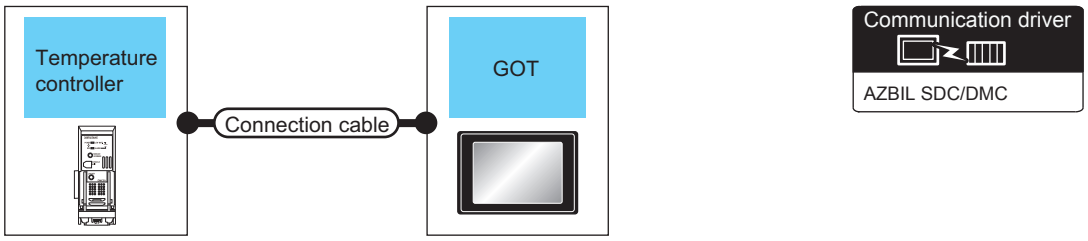

Temperature controller	Connection cable			GOT		Number of connectable equipment
Model name	Connection diagram number	Max. distance	Communication Type	Option device	Model	
DMC50CX	User preparing RS485 connection diagram 10)	500m*1	RS-485	FA-LTBGT2R4CBL05 (0.5m)*2 FA-LTBGT2R4CBL10 (1m)*2 FA-LTBGT2R4CBL20 (2m)*2	GT27 GT25 GT23	Up to 1 temperature controller for 1 GOT
	User preparing RS485 connection diagram 13)	500m	RS-485	- (Built into GOT)	GT27 GT25 GT23 GT2105Q	
	User preparing RS485 connection diagram 11)	500m	RS-485	GT15-RS4-TE	GT27 GT25	
	User preparing RS485 connection diagram 23)	500m	RS-485	- (Built into GOT)	GT2104R GT2103P-04P ET/R4 GT2103P-04P R4	

*1 Including the cable length of the option devices.

*2 Product manufactured by MITSUBISHI ELECTRIC ENGINEERING COMPANY LIMITED.For details of the product, contact MITSUBISHI ELECTRIC ENGINEERING COMPANY LIMITED.

3.2.3 Connecting to SDC15, SDC25/26 or SDC35/36

■1. When using the Interface converter

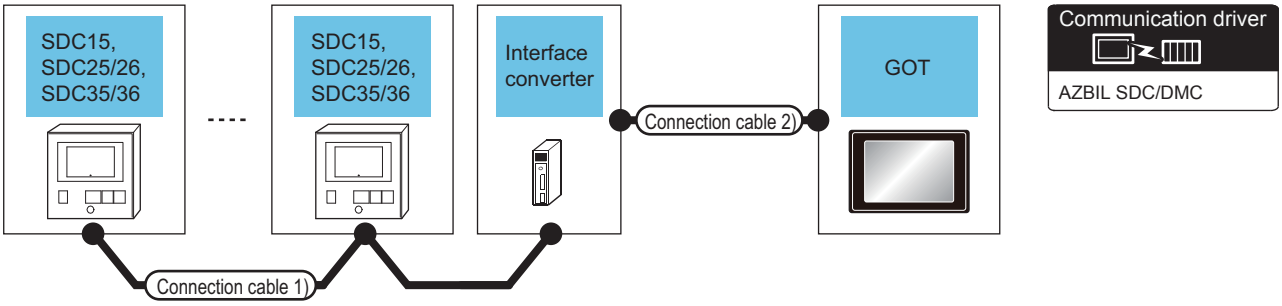

Temperature controller	Connection cable 1)		Interface converter*1		Connection cable 2)		GOT		Number of connectable equipment
Model name	Cable model Connection diagram number	Max. distance	Model name	Communication Type	Cable model Connection diagram number	Max. distance	Option device	Model	
SDC15 SDC25/26 SDC35/36	User preparing RS485 connection diagram 1)	500m	CMC10L	RS-232	User preparing RS232 connection diagram 1)	15m	- (Built into GOT)	GT27 GT25 GT23 GT21(050) GS	Up to 31 temperature controllers for 1 GOT
							GT15-RS2-9P	GT27 GT25	
				RS-232	User preparing RS232 connection diagram 3)	15m	- (Built into GOT)	GT21(04R) GT21(03P 04P R2)	

*1 Product manufactured by Azbil Corporation. For details on the product, contact Azbil Corporation.

■2. When connecting directly

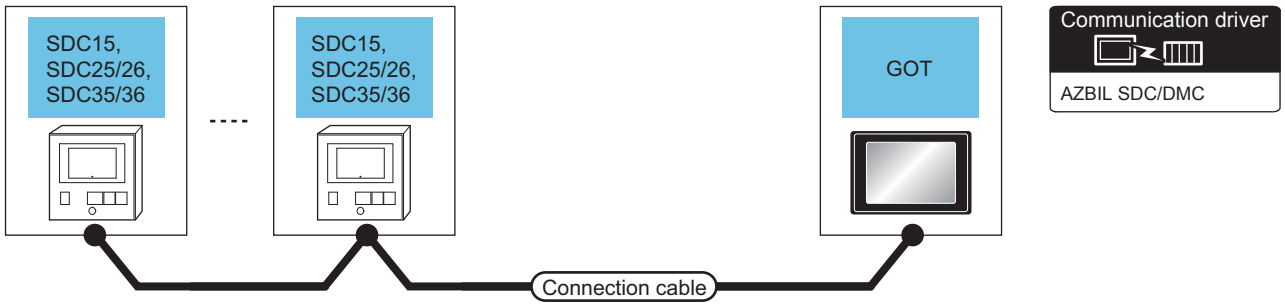

Temperature controller		Connection cable		GOT		Number of connectable equipment
Model name	Communication Type	Cable model Connection diagram number	Max. distance	Option device	Model	
SDC15 SDC25/26 SDC35/36	RS-485	User preparing RS485 connection diagram 3)	500m*1	FA-LTBGT2R4CBL05 (0.5m)*2 FA-LTBGT2R4CBL10 (1m)*2 FA-LTBGT2R4CBL20 (2m)*2	GT27 GT25 GT23	Up to 31 temperature controllers for 1 GOT
		User preparing RS485 connection diagram 12)	500m	- (Built into GOT)	GT27 GT25 GT23 GT21	
		User preparing RS485 connection diagram 5)	500m	GT15-RS4-TE	GT27 GT25	
		User preparing RS485 connection diagram 21)	500m	- (Built into GOT)	GT21 GT2103P GT2104P GT2103P GT2104P	

*1 Including the cable length of the option devices.
*2 Product manufactured by MITSUBISHI ELECTRIC ENGINEERING COMPANY LIMITED.For details of the product, contact MITSUBISHI ELECTRIC ENGINEERING COMPANY LIMITED.

3.2.4 Connecting to SDC20/21

■1. When using the Interface converter

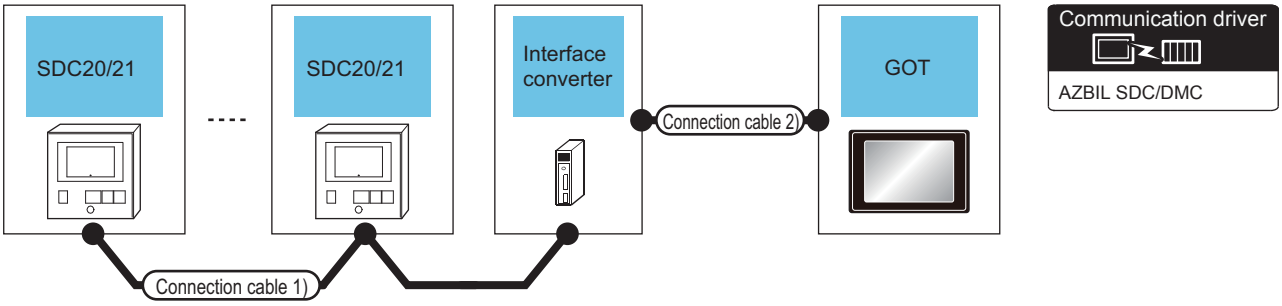

Temperature controller	Connection cable 1)		Interface converter*1		Connection cable 2)		GOT		Number of connectable equipment
Model name	Cable model Connection diagram number	Max. distance	Model name	Communication Type	Cable model Connection diagram number	Max. distance	Option device	Model	
SDC20/21	User preparing RS485 connection diagram 2)	500m	CMC10L	RS-232	User preparing RS232 connection diagram 1)	15m	- (Built into GOT)	GT27 GT25 GT23 GT21 GS	Up to 31 temperature controllers for 1 GOT
							GT15-RS2-9P	GT27 GT25	
					User preparing RS232 connection diagram 3)	15m	- (Built into GOT)	GT21 GT21	

*1 Product manufactured by Azbil Corporation. For details on the product, contact Azbil Corporation.

■2. When connecting directly to one temperature controller

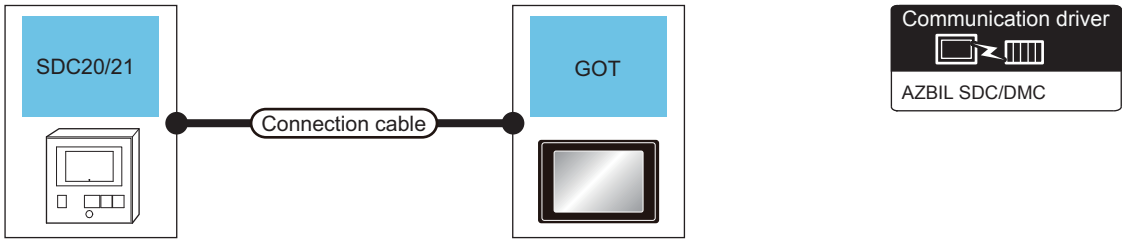

Temperature controller		Connection cable		GOT		Number of connectable equipment
Model name	Communication Type	Cable model Connection diagram number	Max. distance	Option device	Model	
SDC20/21	RS-232	User preparing RS232 connection diagram 2)	15m	- (Built into GOT)	GT27 GT25 GT23 GT21 GS	Up to 1 temperature controller for 1 GOT
				GT15-RS2-9P	GT27 GT25	
		User preparing RS232 connection diagram 4)	15m	- (Built into GOT)	GT21 GT21	

■3. When connecting directly to multiple temperature controllers

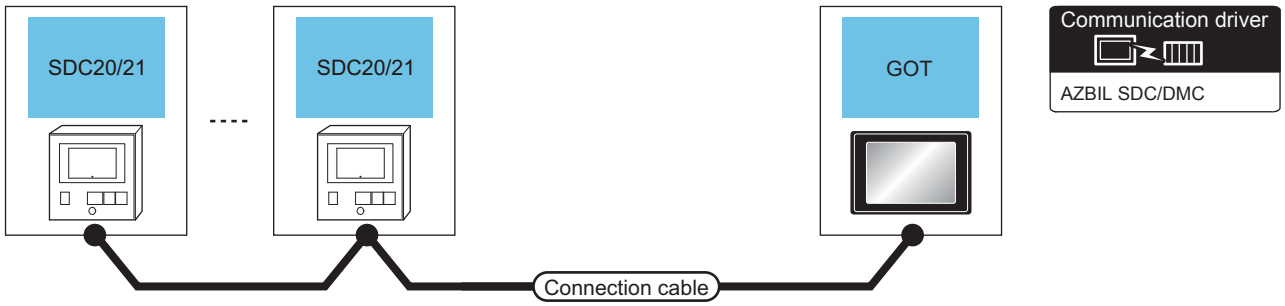

Temperature controller		Connection cable		GOT		Number of connectable equipment
Model name	Communication Type	Cable model Connection diagram number	Max. distance	Option device	Model	
SDC20/21	RS-485	User preparing RS485 connection diagram 4)(4-wire)	500m*1	FA-LTBGT2R4CBL05 (0.5m)*2 FA-LTBGT2R4CBL10 (1m)*2 FA-LTBGT2R4CBL20 (2m)*2	GT27 GT25 GT23	Up to 31 temperature controllers for 1 GOT
		User preparing RS485 connection diagram 14)(2-wire)				
		User preparing RS485 connection diagram 6)(4-wire)	500m	- (Built into GOT)	GT27 GT25 GT23 GT21	
				GT15-RS4-9S	GT27 GT25	
		User preparing RS485 connection diagram 15)(2-wire)	500m	- (Built into GOT)	GT27 GT25 GT23 GT21	
		User preparing RS485 connection diagram 7)(4-wire)	500m	GT15-RS4-TE	GT27 GT25	
		User preparing RS485 connection diagram 16)(2-wire)				
		User preparing RS485 connection diagram 24)(4-wire)	500m	- (Built into GOT)	GT2104R GT2103P GT2104P GT2103P GT2104P R4	
		User preparing RS485 connection diagram 25)(2-wire)				

*1 Including the cable length of the option devices.
*2 Product manufactured by MITSUBISHI ELECTRIC ENGINEERING COMPANY LIMITED.For details of the product, contact MITSUBISHI ELECTRIC ENGINEERING COMPANY LIMITED.

3.2.5 Connecting to SDC30/31

■1. When using the Interface converter

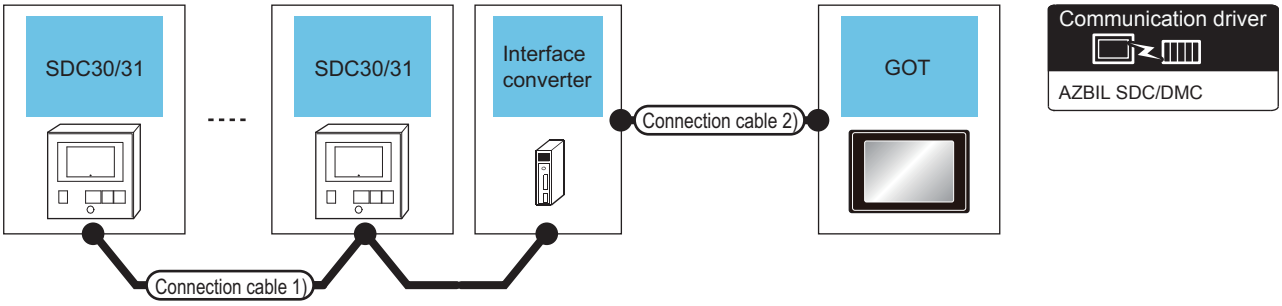

Temperature controller	Connection cable 1)		Interface converter*1		Connection cable 2)		GOT		Number of connectable equipment
Model name	Cable model Connection diagram number	Max. distance	Model name	Communication Type	Cable model Connection diagram number	Max. distance	Option device	Model	
SDC30/31	User preparing RS485 connection diagram 2)	500m	CMC10L	RS-232	User preparing RS232 connection diagram 1)	15m	- (Built into GOT)	GT27 GT25 GT23 GT21(05Q) GS	Up to 31 temperature controllers for 1 GOT
							GT15-RS2-9P	GT27 GT25	
					User preparing RS232 connection diagram 3)	15m	- (Built into GOT)	GT21(04R) GT21(03P 04P R2)	

*1 Product manufactured by Azbil Corporation. For details on the product, contact Azbil Corporation.

■2. When connecting directly

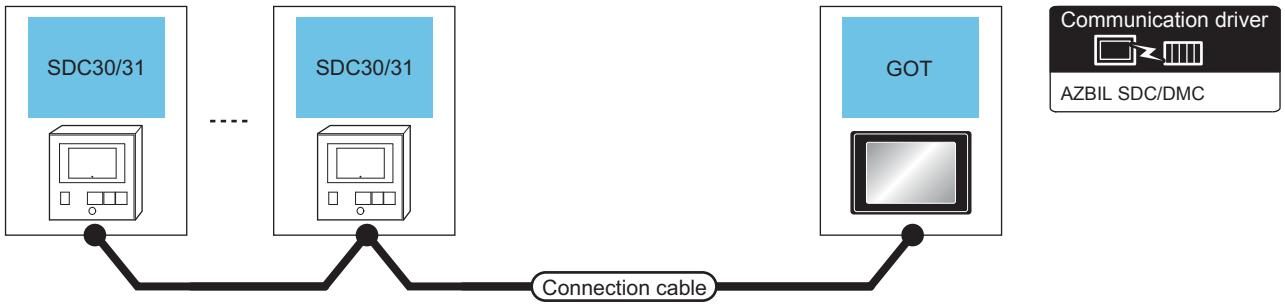

Temperature controller		Connection cable		GOT		Number of connectable equipment
Model name	Communication Type	Cable model Connection diagram number	Max. distance	Option device	Model	
SDC30/31	RS-485	User preparing RS485 connection diagram 4)(4-wire)	500m*1	FA-LTBGT2R4CBL05 (0.5m)*2 FA-LTBGT2R4CBL10 (1m)*2 FA-LTBGT2R4CBL20 (2m)*2	GT27 GT25 GT23	Up to 31 temperature controllers for 1 GOT
		User preparing RS485 connection diagram 14)(2-wire)				
		User preparing RS485 connection diagram 6)(4-wire)	500m	- (Built into GOT)	GT27 GT25 GT23 GT21	
				GT15-RS4-9S	GT27 GT25	
		User preparing RS485 connection diagram 7)(4-wire)	500m	GT15-RS4-TE	GT27 GT25	
		User preparing RS485 connection diagram 16)(2-wire)				
		User preparing RS485 connection diagram 24)(4-wire)	500m	- (Built into GOT)	GT21 GT2103P GT2104P GT2103P GT2104P	

*1 Including the cable length of the option devices.

*2 Product manufactured by MITSUBISHI ELECTRIC ENGINEERING COMPANY LIMITED.For details of the product, contact MITSUBISHI ELECTRIC ENGINEERING COMPANY LIMITED.

3.2.6 Connecting to SDC40A/40B/40G

■1. When using the Interface converter

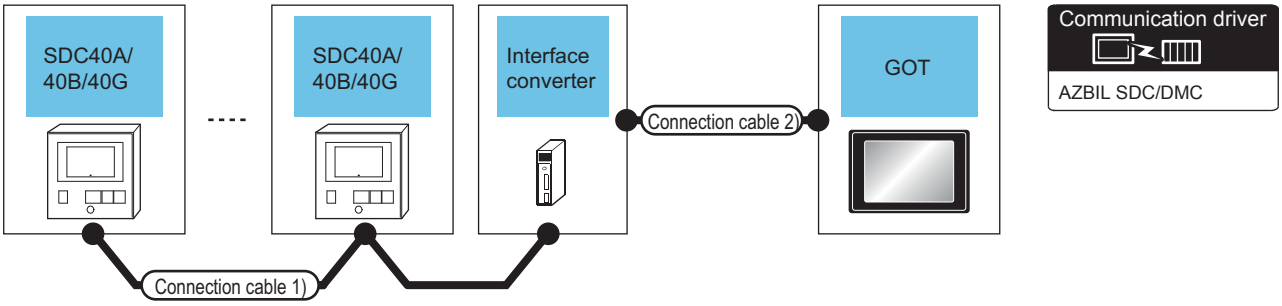

Temperature controller	Connection cable 1)		Interface converter*1		Connection cable 2)		GOT		Number of connectable equipment
Model name	Cable model Connection diagram number	Max. distance	Model name	Communication Type	Cable model Connection diagram number	Max. distance	Option device	Model	
SDC40A/ 40B/40G	User preparing RS485 connection diagram 2)	500m	CMC10L	RS-232	User preparing RS232 connection diagram 1)	15m	- (Built into GOT)	GT27 GT25 GT23 GT21(05Q) GS	Up to 31 temperature controllers for 1 GOT
							GT15-RS2-9P	GT27 GT25	
					User preparing RS232 connection diagram 3)	15m	- (Built into GOT)	GT21(04R) GT2(03P 04P R2)	

*1 Product manufactured by Azbil Corporation. For details on the product, contact Azbil Corporation.

■2. When connecting directly to one temperature controller

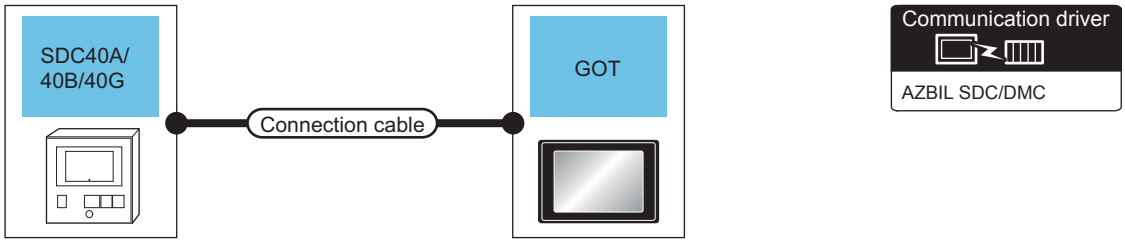

Temperature controller		Connection cable		GOT		Number of connectable equipment
Model name	Communication Type	Cable model Connection diagram number	Max. distance	Option device	Model	
SDC40A/ 40B/40G	RS-232	User preparing RS232 connection diagram 2)	15m	- (Built into GOT)	GT27 GT25 GT23 GT21(05Q) GS	Up to 1 temperature controller for 1 GOT
				GT15-RS2-9P	GT27 GT25	
		User preparing RS232 connection diagram 4)	15m	- (Built into GOT)	GT21(04R) GT2(03P 04P R2)	

■3. When connecting directly to multiple temperature controllers

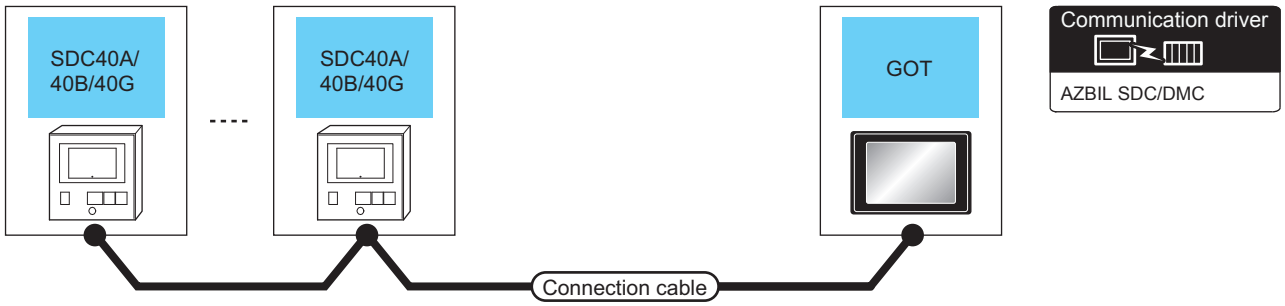

Temperature controller		Connection cable		GOT		Number of connectable equipment
Model name	Communication Type	Cable model Connection diagram number	Max. distance	Option device	Model	
SDC40A/ 40B/40G	RS-485	User preparing RS485 connection diagram 4)(4-wire)	500m*1	FA-LTBGT2R4CBL05 (0.5m)*2 FA-LTBGT2R4CBL10 (1m)*2 FA-LTBGT2R4CBL20 (2m)*2	GT27 GT25 GT23	Up to 31 temperature controllers for 1 GOT
		User preparing RS485 connection diagram 14)(2-wire)				
		User preparing RS485 connection diagram 6)(4-wire)	500m	- (Built into GOT)	GT27 GT25 GT23 GT21(05Q)	
				GT15-RS4-9S	GT27 GT25	
		User preparing RS485 connection diagram 15)(2-wire)	500m	- (Built into GOT)	GT27 GT25 GT23 GT21(05Q)	
		User preparing RS485 connection diagram 7)(4-wire)	500m	GT15-RS4-TE	GT27 GT25	
		User preparing RS485 connection diagram 16)(2-wire)				
		User preparing RS485 connection diagram 24)(4-wire)	500m	- (Built into GOT)	GT21(04R) GT2(03P 04P ET/R4) GT2(03P 04P R4)	
		User preparing RS485 connection diagram 25)(2-wire)				

*1 Including the cable length of the option devices.

*2 Product manufactured by MITSUBISHI ELECTRIC ENGINEERING COMPANY LIMITED.For details of the product, contact MITSUBISHI ELECTRIC ENGINEERING COMPANY LIMITED.

3.2.7 Connecting to SDC45/46

■1. When using the Interface converter

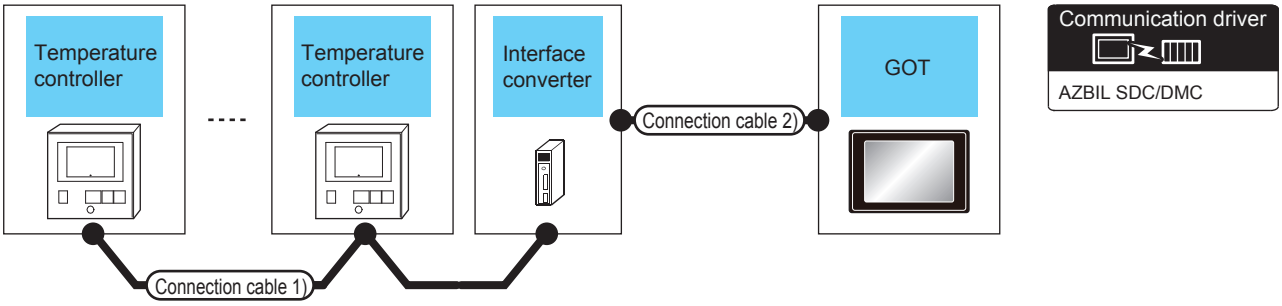

Temperature controller	Connection cable 1)		Interface converter*1		Connection cable 2)		GOT		Number of connectable equipment
Model name	Cable model Connection diagram number	Max. distance	Model name	Communication Type	Cable model Connection diagram number	Max. distance	Option device	Model	
SDC45/46	User preparing RS485 connection diagram 17)	500m	CMC10L	RS-232	User preparing RS232 connection diagram 1)	15m	- (Built into GOT)	GT27 GT25 GT23 GT21(05Q) GS	Up to 31 temperature controllers for 1 GOT
							GT15-RS2-9P	GT27 GT25	
					User preparing RS232 connection diagram 3)	15m	- (Built into GOT)	GT21(04R) GT2(03P 104P R2)	

*1 Product manufactured by Azbil Corporation. For details on the product, contact Azbil Corporation.

■2. When connecting directly to multiple temperature controllers

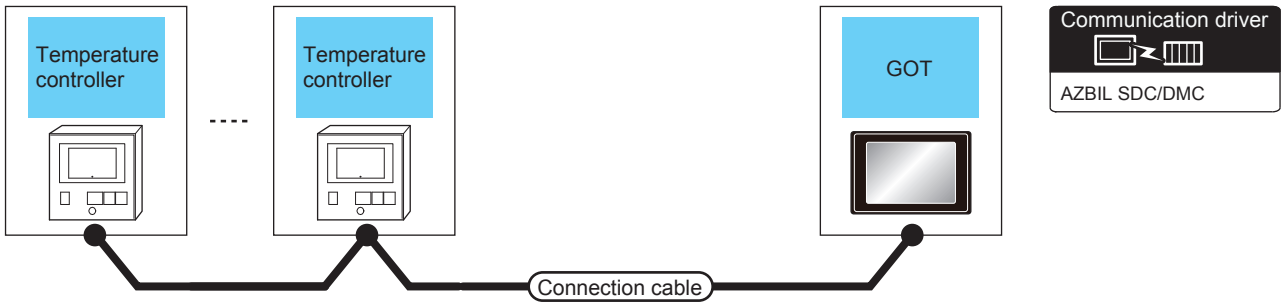

Temperature controller		Connection cable		GOT		Number of connectable equipment
Model name	Communication Type	Cable model Connection diagram number	Max. distance	Option device	Model	
SDC45/46	RS-485	User preparing RS485 connection diagram 18)	500m*1	FA-LTBGT2R4CBL05 (0.5m)*2 FA-LTBGT2R4CBL10 (1m)*2 FA-LTBGT2R4CBL20 (2m)*2	GT27 GT25 GT23	Up to 31 temperature controller for 1 GOT
		User preparing RS485 connection diagram 19)	500m	GT15-RS4-TE	GT27 GT25	
		User preparing RS485 connection diagram 20)	500m	- (Built into GOT)	GT27 GT25 GT23 GT21	
		User preparing RS485 connection diagram 26)	500m	- (Built into GOT)	GT21 GT21 GT21	

*1 Including the cable length of the option devices.

*2 Product manufactured by MITSUBISHI ELECTRIC ENGINEERING COMPANY LIMITED.For details of the product, contact MITSUBISHI ELECTRIC ENGINEERING COMPANY LIMITED.

3.2.8 Connecting to CMS, MQV, MPC, MVF, RX

■1. When using the Interface converter

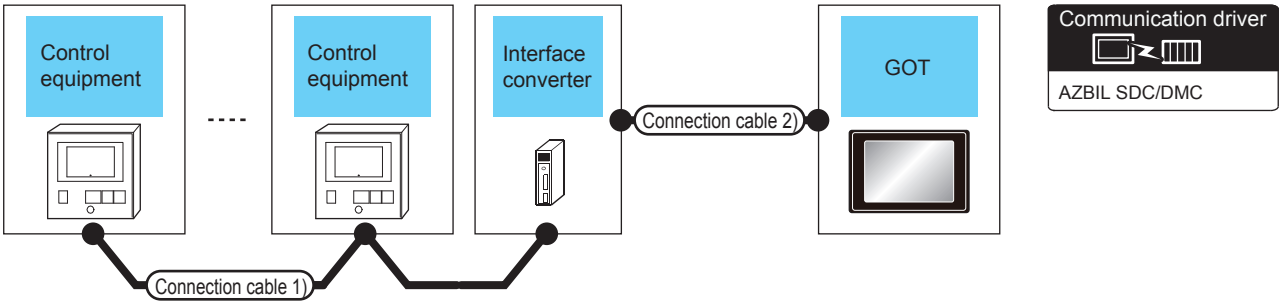

Control equipment	Connection cable 1)		Interface converter*1		Connection cable 2)		GOT		Number of connectable equipment
Model name	Cable model Connection diagram number	Max. distance	Model name	Communication Type	Cable model Connection diagram number	Max. distance	Option device	Model	
CMS MQV MPC MVF RX	User preparing RS485 connection diagram 17)	500m	CMC10L	RS-232	User preparing RS232 connection diagram 1)	15m	- (Built into GOT)	GT27 GT25 GT23 GT21 GS	Up to 31 control equipment for 1 GOT
							GT15-RS2-9P	GT27 GT25	
					User preparing RS232 connection diagram 3)	15m	- (Built into GOT)	GT21 GT2	

*1 Product manufactured by Azbil Corporation. For details on the product, contact Azbil Corporation.

■2. When connecting directly to multiple control equipments

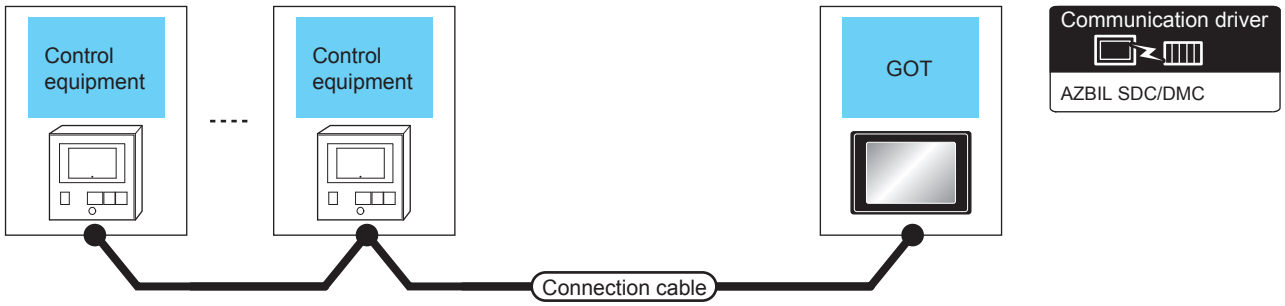

Control equipment		Connection cable		GOT		Number of connectable equipment
Model name	Communication Type	Cable model Connection diagram number	Max. distance	Option device	Model	
CMS MQV MPC MVF RX	RS-485	User preparing RS485 connection diagram 18)	500m*1	FA-LTBGT2R4CBL05 (0.5m)*2 FA-LTBGT2R4CBL10 (1m)*2 FA-LTBGT2R4CBL20 (2m)*2	GT27 GT25 GT23	Up to 1 control equipment for 1 GOT
		User preparing RS485 connection diagram 19)	500m	GT15-RS4-TE	GT27 GT25	
		User preparing RS485 connection diagram 20)	500m	- (Built into GOT)	GT27 GT25 GT23 GT21	
		User preparing RS485 connection diagram 26)	500m	- (Built into GOT)	GT21 GT21 GT21	

*1 Including the cable length of the option devices.

*2 Product manufactured by MITSUBISHI ELECTRIC ENGINEERING COMPANY LIMITED.For details of the product, contact MITSUBISHI ELECTRIC ENGINEERING COMPANY LIMITED.

3.2.9 Connecting to CMF015, CMF050

■1. When using the Interface converter

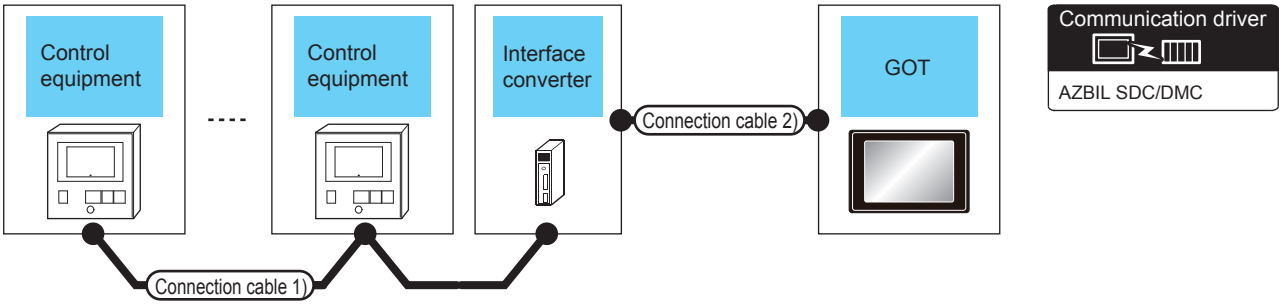

Control equipment	Connection cable 1)		Interface converter*1		Connection cable 2)		GOT		Number of connectable equipment
Model name	Cable model Connection diagram number	Max. distance	Model name	Communication Type	Cable model Connection diagram number	Max. distance	Option device	Model	
CMF015	User preparing RS485 connection diagram 17)	500m	CMC10L	RS-232	User preparing RS232 connection diagram 1)	15m	- (Built into GOT)	GT27 GT25 GT23 GT21(05Q) GS	Up to 31 control equipment for 1 GOT
							GT15-RS2-9P	GT27 GT25	
					User preparing RS232 connection diagram 3)	15m	- (Built into GOT)	GT21(04R) GT21(03P 04P R2)	
CMF050	User preparing RS485 connection diagram 2)	500m	CMC10L	RS-232	User preparing RS232 connection diagram 1)	15m	- (Built into GOT)	GT27 GT25 GT23 GT21(05Q) GS	Up to 31 control equipment for 1 GOT
							GT15-RS2-9P	GT27 GT25	
					User preparing RS232 connection diagram 3)	15m	- (Built into GOT)	GT21(04R) GT21(03P 04P R2)	

*1 Product manufactured by Azbil Corporation. For details on the product, contact Azbil Corporation.

■2. When connecting directly

(1) Connecting to CMF015

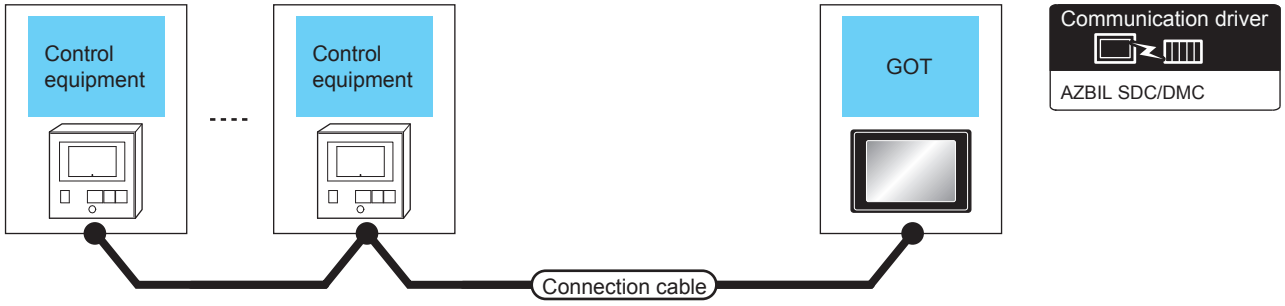

Control equipment		Connection cable		GOT		Number of connectable equipment
Model name	Communication Type	Cable model Connection diagram number	Max. distance	Option device	Model	
CMF015	RS-485	User preparing RS485 connection diagram 18)	500m*1	FA-LTBGT2R4CBL05 (0.5m)*2 FA-LTBGT2R4CBL10 (1m)*2 FA-LTBGT2R4CBL20 (2m)*2	GT27 GT25 GT23	Up to 1 control equipment for 1 GOT
		User preparing RS485 connection diagram 19)	500m	GT15-RS4-TE	GT27 GT25	
		User preparing RS485 connection diagram 20)	500m	- (Built into GOT)	GT27 GT25 GT23 GT21	
		User preparing RS485 connection diagram 26)	500m	- (Built into GOT)	GT21 GT21 GT21	

*1 Including the cable length of the option devices.

*2 Product manufactured by MITSUBISHI ELECTRIC ENGINEERING COMPANY LIMITED.For details of the product, contact MITSUBISHI ELECTRIC ENGINEERING COMPANY LIMITED.

(2) Connecting to CMF050

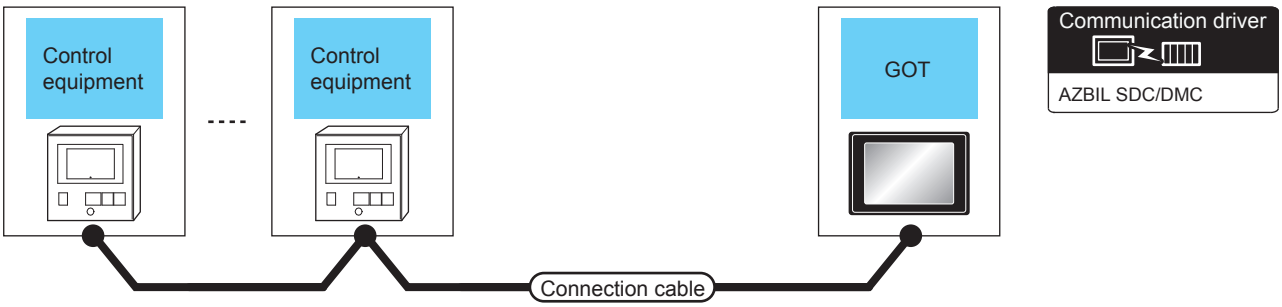

Control equipment		Connection cable		GOT		Number of connectable equipment
Model name	Communication Type	Cable model Connection diagram number	Max. distance	Option device	Model	
CMF050	RS-485	User preparing RS485 connection diagram 4)(4-wire)	500m*1	FA-LTBGT2R4CBL05 (0.5m)*2 FA-LTBGT2R4CBL10 (1m)*2 FA-LTBGT2R4CBL20 (2m)*2	GT27 GT25 GT23	Up to 1 control equipment for 1 GOT
		User preparing RS485 connection diagram 14)(2-wire)				
		User preparing RS485 connection diagram 6)(4-wire)	500m	- (Built into GOT)	GT27 GT25 GT23 GT21	
				GT15-RS4-9S	GT27 GT25	
		User preparing RS485 connection diagram 15)(2-wire)	500m	- (Built into GOT)	GT27 GT25 GT23 GT21	
		User preparing RS485 connection diagram 7)(4-wire)	500m	GT15-RS4-TE	GT27 GT25	
		User preparing RS485 connection diagram 16)(2-wire)				
		User preparing RS485 connection diagram 24)(4-wire)	500m	- (Built into GOT)	GT21 GT2103P BT/R4 GT2104P R4	
		User preparing RS485 connection diagram 25)(2-wire)				

*1 Including the cable length of the option devices.

*2 Product manufactured by MITSUBISHI ELECTRIC ENGINEERING COMPANY LIMITED.For details of the product, contact MITSUBISHI ELECTRIC ENGINEERING COMPANY LIMITED.

3.2.10 Connecting to CML, PBC201-VN2

■1. When using the Interface converter

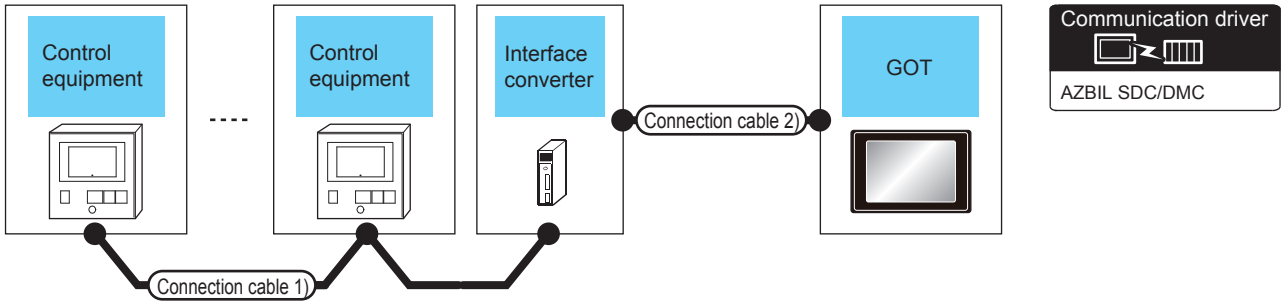

Control equipment	Connection cable 1)		Interface converter*1		Connection cable 2)		GOT		Number of connectable equipment
Model name	Cable model Connection diagram number	Max. distance	Model name	Communication Type	Cable model Connection diagram number	Max. distance	Option device	Model	
CML PBC201-VN2	User preparing RS485 connection diagram 2)	500m	CMC10L	RS-232	User preparing RS232 connection diagram 1)	15m	- (Built into GOT)	GT27 GT25 GT23 GT21(05C) GS	Up to 31 control equipment for 1 GOT
							GT15-RS2-9P	GT27 GT25	
					User preparing RS232 connection diagram 3)	15m	- (Built into GOT)	GT21(04R) GT21(03P 04P R2)	

*1 Product manufactured by Azbil Corporation. For details on the product, contact Azbil Corporation.

■2. When connecting directly

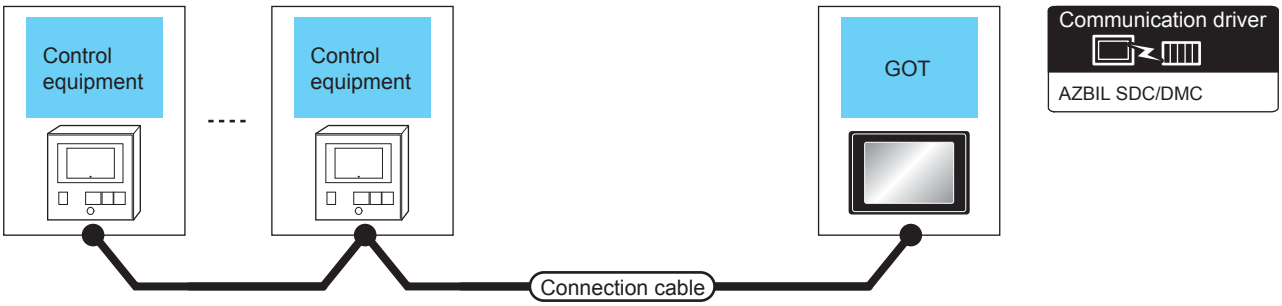

Control equipment		Connection cable		GOT		Number of connectable equipment
Model name	Communication Type	Cable model Connection diagram number	Max. distance	Option device	Model	
CML PBC201-VN2	RS-485	User preparing RS485 connection diagram 4)(4-wire)	500m*1	FA-LTBGT2R4CBL05 (0.5m)*2 FA-LTBGT2R4CBL10 (1m)*2 FA-LTBGT2R4CBL20 (2m)*2	GT27 GT25 GT23	Up to 1 control equipment for 1 GOT
		User preparing RS485 connection diagram 14)(2-wire)				
		User preparing RS485 connection diagram 6)(4-wire)	500m	- (Built into GOT)	GT27 GT25 GT23 GT21	
				GT15-RS4-9S	GT27 GT25	
		User preparing RS485 connection diagram 15)(2-wire)	500m	- (Built into GOT)	GT27 GT25 GT23 GT21	
		User preparing RS485 connection diagram 7)(4-wire)	500m	GT15-RS4-TE	GT27 GT25	
		User preparing RS485 connection diagram 16)(2-wire)				
		User preparing RS485 connection diagram 24)(4-wire)	500m	- (Built into GOT)	GT21 GT21 GT21	
		User preparing RS485 connection diagram 25)(2-wire)				

*1 Including the cable length of the option devices.

*2 Product manufactured by MITSUBISHI ELECTRIC ENGINEERING COMPANY LIMITED.For details of the product, contact MITSUBISHI ELECTRIC ENGINEERING COMPANY LIMITED.

3.2.11 Connecting to AUR350C, AUR450C

■1. When using the Interface converter

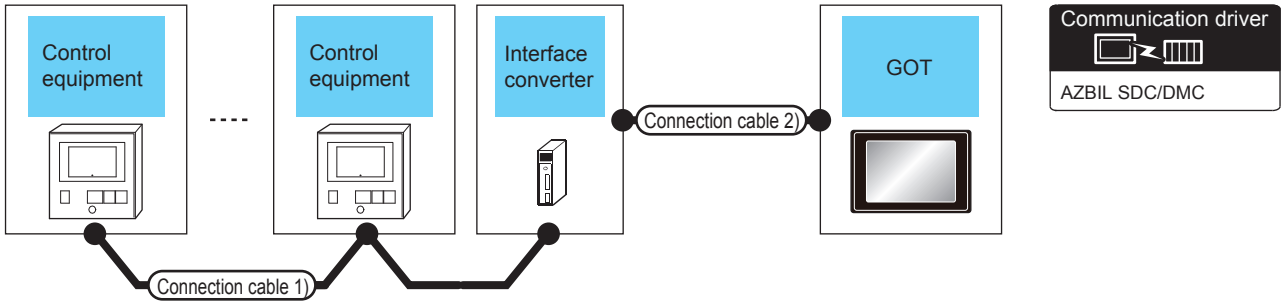

Control equipment	Connection cable 1)		Interface converter*1		Connection cable 2)		GOT		Number of connectable equipment
Model name	Cable model Connection diagram number	Max. distance	Model name	Communication Type	Cable model Connection diagram number	Max. distance	Option device	Model	
AUR350C AUR450C	User preparing RS485 connection diagram 1)	500m	CMC10L	RS-232	User preparing RS232 connection diagram 1)	15m	- (Built into GOT)	GT27 GT25 GT23 GT05Q21 GS	Up to 31 control equipment for 1 GOT
							GT15-RS2-9P	GT27 GT25	
					User preparing RS232 connection diagram 3)	15m	- (Built into GOT)	GT04R21 GT03P21 GT04P21 R2	

*1 Product manufactured by Azbil Corporation. For details on the product, contact Azbil Corporation.

■2. When connecting directly

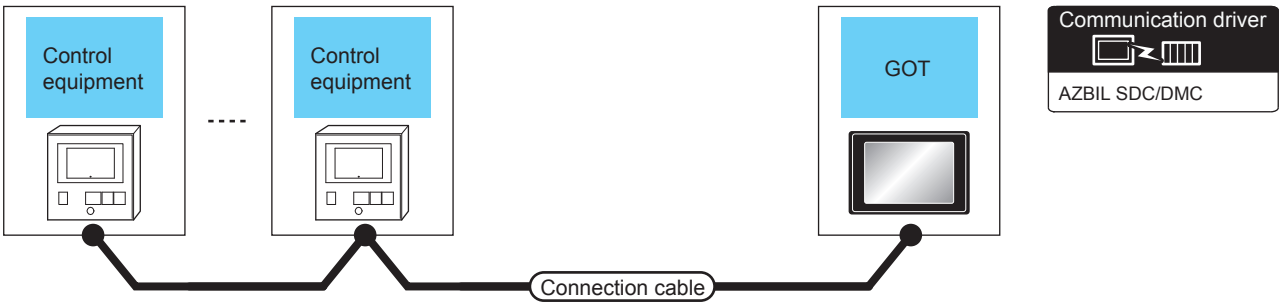

Control equipment		Connection cable		GOT		Number of connectable equipment
Model name	Communication Type	Cable model Connection diagram number	Max. distance	Option device	Model	
AUR350C AUR450C	RS-485	User preparing RS485 connection diagram 3)	500m*1	FA-LTBGT2R4CBL05 (0.5m)*2 FA-LTBGT2R4CBL10 (1m)*2 FA-LTBGT2R4CBL20 (2m)*2	GT27 GT25 GT23	Up to 1 control equipment for 1 GOT
		User preparing RS485 connection diagram 5)	500m	GT15-RS4-TE	GT27 GT25	
		User preparing RS485 connection diagram 12)	500m	- (Built into GOT)	GT27 GT25 GT23 GT21	
		User preparing RS485 connection diagram 21)	500m	- (Built into GOT)	GT21 GT2103P GT2104P ET/R4 GT2103P GT2104P R4	

*1 Including the cable length of the option devices.

*2 Product manufactured by MITSUBISHI ELECTRIC ENGINEERING COMPANY LIMITED.For details of the product, contact MITSUBISHI ELECTRIC ENGINEERING COMPANY LIMITED.

3.2.12 Connecting to CMC10B

■1. When using the Interface converter

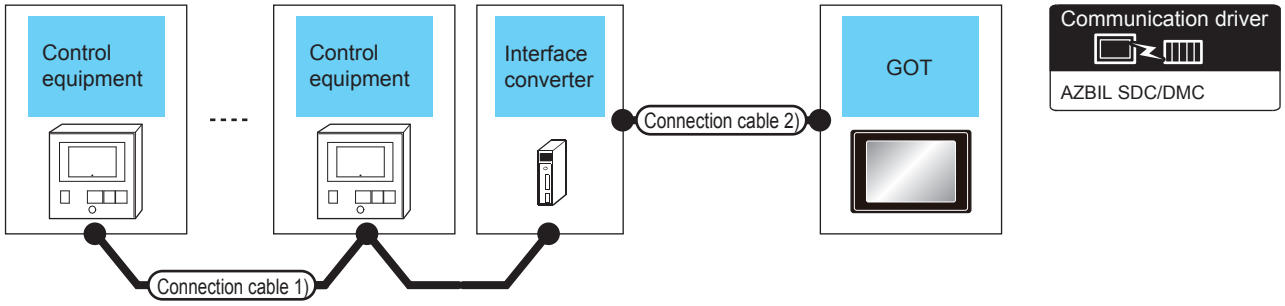

Control equipment	Connection cable 1)		Interface converter*1		Connection cable 2)		GOT		Number of connectable equipment
Model name	Cable model Connection diagram number	Max. distance	Model name	Communication Type	Cable model Connection diagram number	Max. distance	Option device	Model	
CMC10B	User preparing RS485 connection diagram 2)	500m	CMC10L	RS-232	User preparing RS232 connection diagram 1)	15m	- (Built into GOT)	GT27 GT25 GT23 GT21 GS	Up to 31 control equipment for 1 GOT
							GT15-RS2-9P	GT27 GT25	
					User preparing RS232 connection diagram 3)	15m	- (Built into GOT)	GT21	

*1 Product manufactured by Azbil Corporation. For details on the product, contact Azbil Corporation.

■2. When connecting directly to multiple control equipments

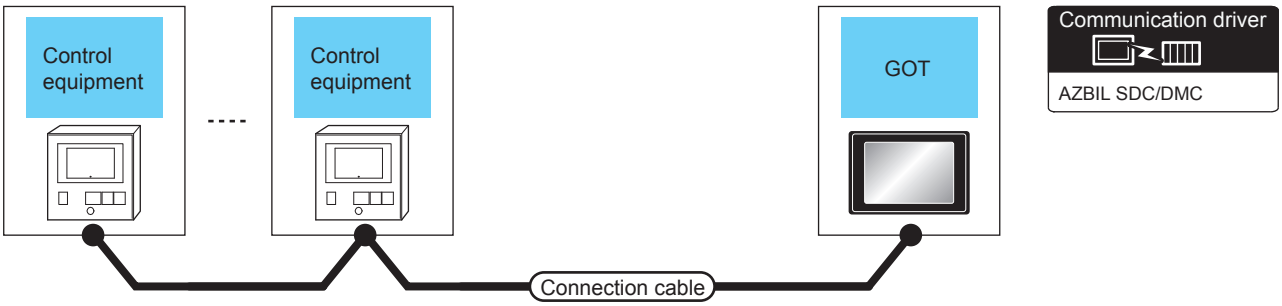

Control equipment		Connection cable		GOT		Number of connectable equipment
Model name	Communication Type	Cable model Connection diagram number	Max. distance	Option device	Model	
CMC10B	RS-485	User preparing RS485 connection diagram 4)	500m*1	FA-LTBGT2R4CBL05 (0.5m)*2 FA-LTBGT2R4CBL10 (1m)*2 FA-LTBGT2R4CBL20 (2m)*2	GT27 GT25 GT23	Up to 1 control equipment for 1 GOT
		User preparing RS485 connection diagram 6)	500m	- (Built into GOT)	GT27 GT25 GT23 GT21	
				GT15-RS4-9S	GT27 GT25	
		User preparing RS485 connection diagram 7)	500m	GT15-RS4-TE	GT27 GT25	
		User preparing RS485 connection diagram 24)	500m	- (Built into GOT)	GT21 GT2103P ET/R4 GT2104P R4	

*1 Including the cable length of the option devices.

*2 Product manufactured by MITSUBISHI ELECTRIC ENGINEERING COMPANY LIMITED.For details of the product, contact MITSUBISHI ELECTRIC ENGINEERING COMPANY LIMITED.

3.2.13 Connecting to AHC2001

■1. When connecting to one temperature controller

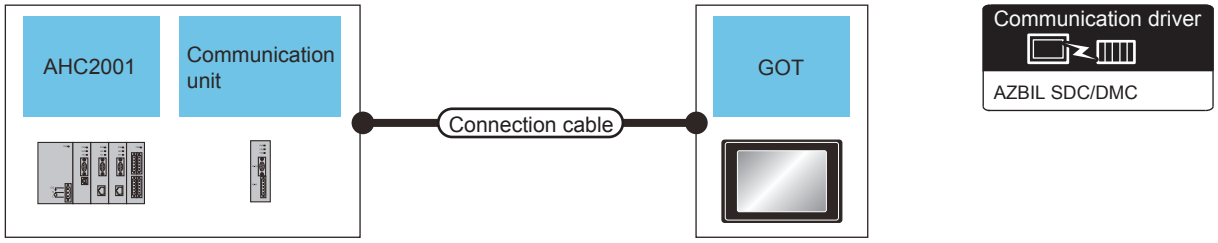

Control equipment			Connection cable		GOT		Number of connectable equipment
Model name	Communication unit	Communication Type	Cable model Connection diagram number	Max. distance	Option device	Model	
AHC2001	-	RS-232	User preparing RS232 connection diagram 2)	15m	- (Built into GOT)	GT27 GT25 GT23 GT21(05Q) GS	Up to 1 temperature controllers for 1 GOT
	SCU				GT15-RS2-9P	GT27 GT25	
			User preparing RS232 connection diagram 4)	15m	- (Built into GOT)	GT21(04R) GT21(03P 04P R2)	

Control equipment			Connection cable		GOT		Number of connectable equipment
Model name	Communication unit	Communication Type	Cable model Connection diagram number	Max. distance	Option device	Model	
AHC2001	SCU	RS-485	User preparing RS485 connection diagram 4)	500m[*1]	FA-LTBGT2R4CBL05 (0.5m)[*2] FA-LTBGT2R4CBL10 (1m)[*2] FA-LTBGT2R4CBL20 (2m)[*2]	GT27 GT25 GT23	Up to 1 temperature controllers for 1 GOT
			User preparing RS485 connection diagram 14)				
			User preparing RS485 connection diagram 6)	500m	- (Built into GOT)	GT27 GT25 GT23 GT21(05Q)	
					GT15-RS4-9S	GT27 GT25	
			User preparing RS485 connection diagram 15)	500m	- (Built into GOT)	GT27 GT25 GT23 GT21(05Q)	
			User preparing RS485 connection diagram 7)	500m	GT15-RS4-TE	GT27 GT25	
			User preparing RS485 connection diagram 16)				
			User preparing RS485 connection diagram 24)(4-wire)	500m	- (Built into GOT)	GT21(04R) GT21(03P 04P ET/R4) GT21(03P 04P R4)	
			User preparing RS485 connection diagram 25)(2-wire)				

*1 Including the cable length of the option devices.

*2 Product manufactured by MITSUBISHI ELECTRIC ENGINEERING COMPANY LIMITED.For details of the product, contact MITSUBISHI ELECTRIC ENGINEERING COMPANY LIMITED.

■2. When connecting to multiple temperature controllers

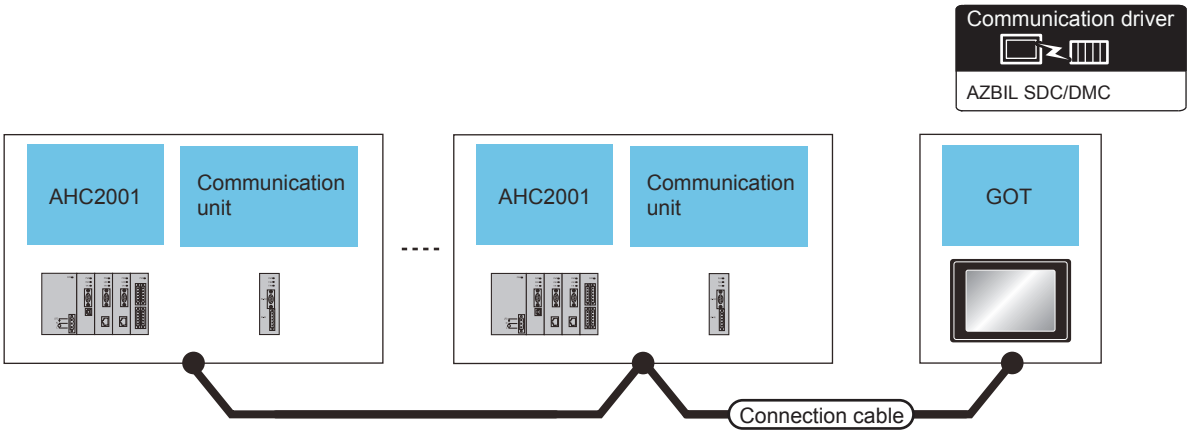

Control equipment			Connection cable		GOT		Number of connectable equipment
Model name	Communication unit	Communication Type	Cable model Connection diagram number	Max. distance	Option device	Model	
AHC2001	SCU	RS-485	User preparing RS485 connection diagram 4)	500m*1	FA-LTBGT2R4CBL05 (0.5m)*2 FA-LTBGT2R4CBL10 (1m)*2 FA-LTBGT2R4CBL20 (2m)*2	GT27 GT25 GT23	Up to 31 temperature controllers for 1 GOT
			User preparing RS485 connection diagram 14)				
			User preparing RS485 connection diagram 6)	500m	- (Built into GOT)	GT27 GT25 GT23 GT21(05Q)	
					GT15-RS4-9S	GT27 GT25	
			User preparing RS485 connection diagram 15)	500m	- (Built into GOT)	GT27 GT25 GT23 GT21(05Q)	
			User preparing RS485 connection diagram 7)	500m	GT15-RS4-TE	GT27 GT25	
			User preparing RS485 connection diagram 16)				
			User preparing RS485 connection diagram 24)(4-wire)	500m	- (Built into GOT)	GT21(04R) GT21(03P 04P ET/R4) GT21(03P 04P R4)	
			User preparing RS485 connection diagram 25)(2-wire)				

*1 Including the cable length of the option devices.
*2 Product manufactured by MITSUBISHI ELECTRIC ENGINEERING COMPANY LIMITED.For details of the product, contact MITSUBISHI ELECTRIC ENGINEERING COMPANY LIMITED.

3.2.14 Connecting to NX series

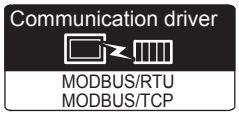

Use a MODBUS(R)/RTU or MODBUS(R)/TCP communication driver to connect the GOT to NX series.
For the MODBUS(R)/RTU or MODBUS(R)/TCP connection, refer to the following manual.

➠ GOT2000 Series Connection Manual (Microcomputer/MODBUS/Peripheral Connection)
4. MODBUS(R)/RTU CONNECTION
5. MODBUS(R)/TCP CONNECTION

For the valid devices, refer to the following Technical News.

➠ List of Valid Devices Applicable for GOT2000 Series with MODBUS Connection (GOT-A-0070)

3.3 Connection Diagram

The following diagram shows the connection between the GOT and the control equipment.

3.3.1 RS-232 cable

■1. Connection diagram

(1) RS232 connection diagram 1)

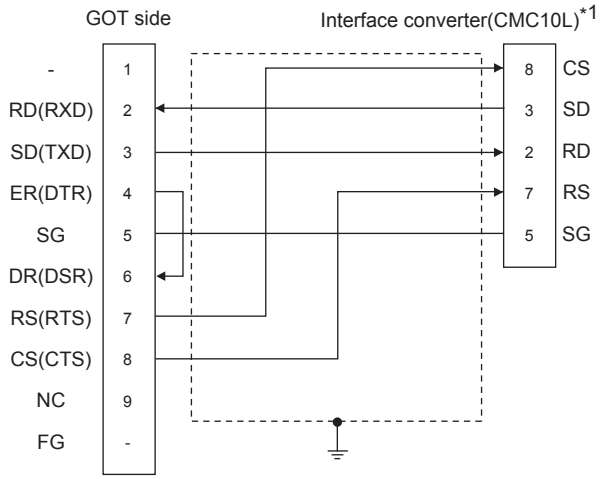

*1 For details on the setting method of the TERMINAL mode, refer to the following.

➠ 3.5.5 Connecting to CMC10L

(2) RS232 connection diagram 2)

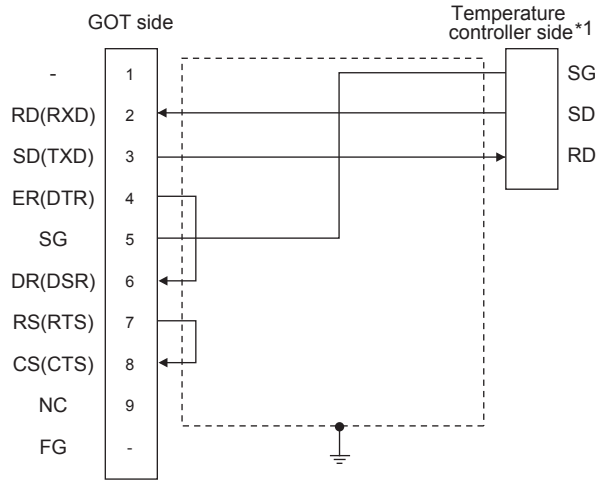

*1 Pin No. of temperature controller differs depending on model and optional function model.
Refer to the following table. The numbers in ( ) of the following table correspond to optional function models.

Signal name	Model of temperature controller					
	SDC20		SDC21	SDC40A, SDC40B, SDC40G	AHC2001	
	(03, 05)	(10)	(04, 07, 09)		CPU	SCU
	Pin No.	Pin No.	Pin No.	Pin No.	Pin No.	Pin No.
SG	5	18	29	61	5	5
SD	17	16	27	60	3	3
RD	18	17	28	59	2	2

(3) RS232 connection diagram 3)

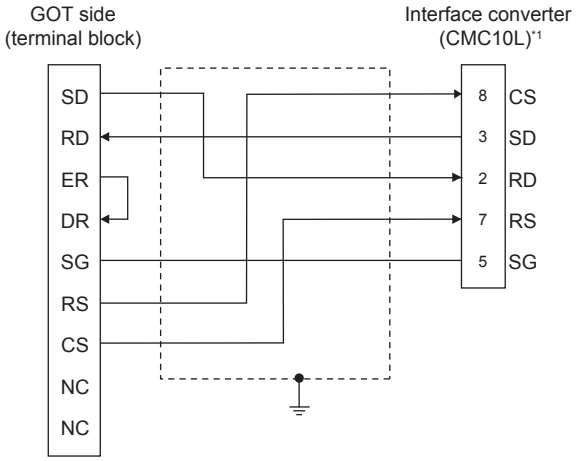

*1 For details on the setting method of the TERMINAL mode, refer to the following.

➠ 3.5.5 Connecting to CMC10L

(4) RS232 connection diagram 4)

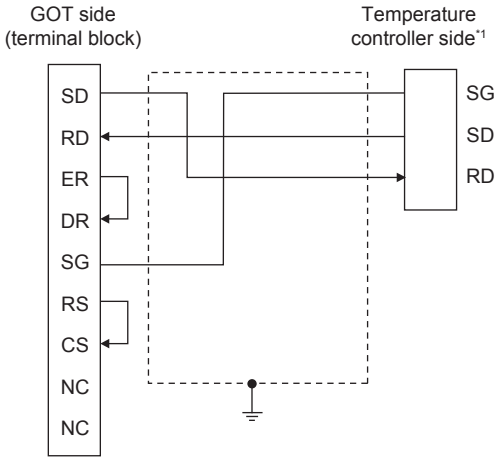

*1 Pin No. of temperature controller differs depending on model and optional function model.
Refer to the following table. The numbers in ( ) of the following table correspond to optional function models.

Signal name	Model of temperature controller					
	SDC20		SDC21	SDC40A, SDC40B, SDC40G	AHC2001	
	(03, 05)	(10)	(04, 07, 09)		CPU	SCU
	Pin No.	Pin No.	Pin No.	Pin No.	Pin No.	Pin No.
SG	5	18	29	61	5	5
SD	17	16	27	60	3	3
RD	18	17	28	59	2	2

■2. Precautions when preparing a cable

(1) Cable length

The length of the RS-232 cable must be 15m or less.

(2) GOT side connector

For the GOT side connector, refer to the following.

➠ 1.4.1 GOT connector specifications

(3) AZBIL control equipment side connector

Use the connector compatible with the AZBIL control equipment side module.
For details, refer to the user's manual of the AZBIL control equipment

3.3.2 RS-485 cable

■1. Connection diagram

(1) RS485 connection diagram 1)

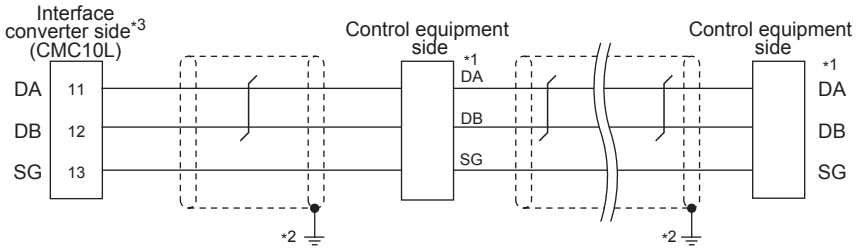

*1 Pin No. of control equipment differs depending on the model.Refer to the following table.

Signal name	Model of control equipment			
	DMC10	SDC15	SDC25/26 SDC35/36	AUR350C AUR450C
	Pin No.	Pin No.	Pin No.	Pin No.
DA	4	16	22	DA
DB	5	17	23	DB
SG	6	18	24	SG

*2 Connect FG grounding to the single-sided end of a cable shield line.

*3 Set the terminal resistor to "Disable".
For details of terminating resistor settings, refer to the following.

➠ 3.5.5 Connecting to CMC10L

(2) RS485 connection diagram 2)

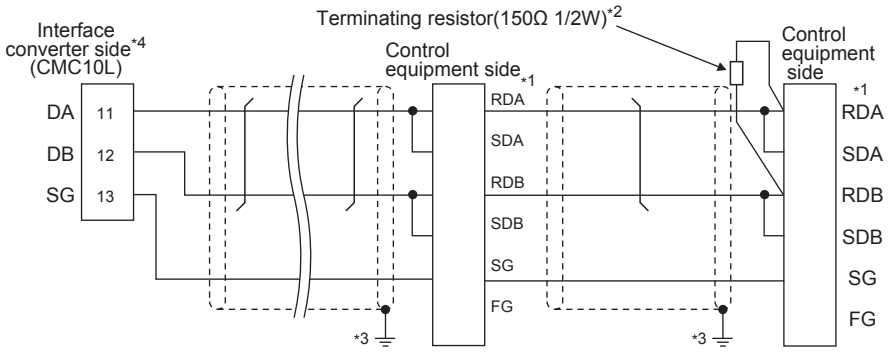

*1 Pin No. of control equipment differs depending on model and optional function model. Refer to the following table.The numbers in ( ) of the following table correspond to optional function models.

Signal name	Model of control equipment									
	SDC20		SDC21	SDC30	SDC31		SDC40A/ 40B/40G	CMF050C ML	PBC201- VN2	CMC10B
	(02, 04)	(09)	(03, 06, 08)	(040, 041)	(045)	(446, 546)				
	Pin No.	Pin No.	Pin No.	Pin No.	Pin No.	Pin No.	Pin No.	Pin No.	Pin No.	Pin No.
RDA	17	18	27	18	18	27	59	9	12	11
RDB	18	19	28	19	19	28	60	10	13	12
SDA	15	16	25	16	16	25	57	7	14	13
SDB	16	17	26	17	17	26	58	8	15	14
SG	5	5	29	5	5	29	61	12	16	15
FG	3, 4	3, 4	3, 4	3, 4	3, 4	3, 4	3	19	3	-

*2 Terminating resistor should be provided for a Interface converter and a control equipment which will be terminals.

*3 Connect FG grounding to the single-sided end of a cable shield line.

*4 Since the Interface converter has a built-in terminating resistor, set the terminating resistor of GOT to "Enable".
For details of terminating resistor settings, refer to the following.

➠ 3.5.5 Connecting to CMC10L

(3) RS485 connection diagram 3)

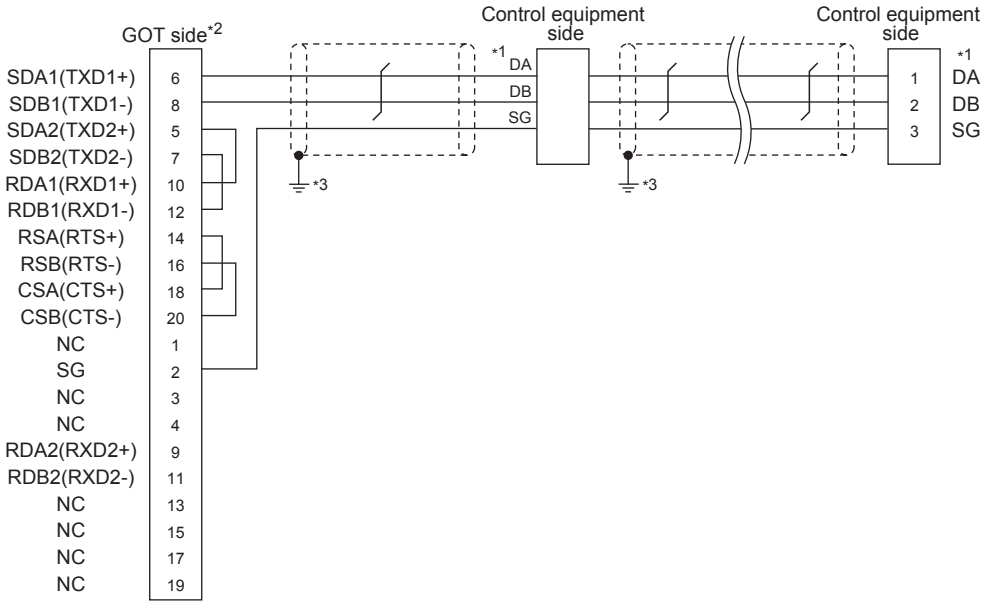

*1 Pin No. of control equipment differs depending on the model.Refer to the following table.

Signal name	Model of control equipment			
	DMC10	SDC15	SDC25/26 SDC35/36	AUR350C AUR450C
	Pin No.	Pin No.	Pin No.	Pin No.
DA	4	16	22	DA
DB	5	17	23	DB
SG	6	18	24	SG

*2 Set the terminating resistor of GOT as follows.
Set the terminating resistor setting switch of the GOT main unit to "Disable".

➠ ■3. Connecting terminating resistors

*3 Connect FG grounding to the single-sided end of a cable shield line.

(4) RS485 connection diagram 4)

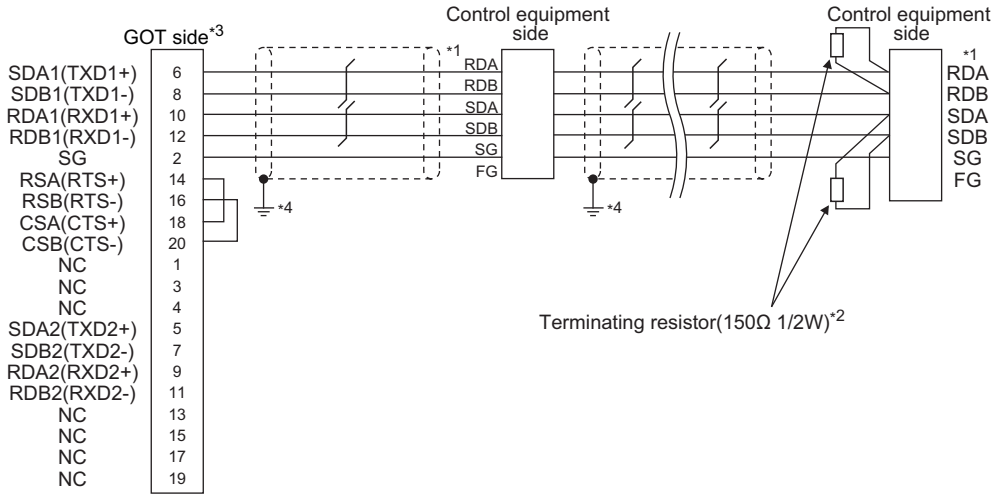

*1 Pin No. of control equipment differs depending on model or optional function model.
Refer to the following table.The numbers in ( ) of the following table correspond to optional function models.

Signal name	Model of control equipmentr						
	SDC20		SDC21	SDC30	SDC31		SDC40A/40B/40G
	(02, 04)	(09)	(03, 06, 08)	(040, 041)	(045)	(446, 546)	
	Pin No.	Pin No.	Pin No.	Pin No.	Pin No.	Pin No.	Pin No.
RDA	17	18	27	18	18	27	59
RDB	18	19	28	19	19	28	60
SDA	15	16	25	16	16	25	57
SDB	16	17	26	17	17	26	58
SG	5	5	29	5	5	29	61
FG	3, 4	3, 4	3, 4	3, 4	3, 4	3, 4	3

Signal name	Model of control equipment			
	CMF050 CML	PBC201-VN2	CMC10B	AHC2001
	Pin No.	Pin No.	Pin No.	Pin No.
RDA	9	12	11	3
RDB	10	13	12	2
SDA	7	14	13	5
SDB	8	15	14	4
SG	12	16	15	1
FG	19	3	-	-

*2 Terminating resistor should be provided for a control equipment which will be a terminal.

*3 Set the terminating resistor of GOT as follows.
Set the terminating resistor setting switch of the GOT main unit to "100 OHM".

➠ ■3. Connecting terminating resistors

*4 Connect FG grounding to the single-sided end of a cable shield line.

(5) RS485 connection diagram 5)

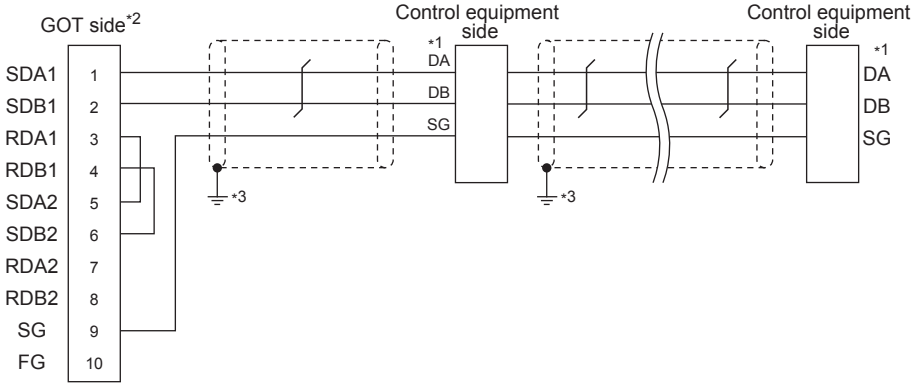

*1 Pin No. of Model of control equipment differs depending on the model.Refer to the following table.

Signal name	Model of control equipment			
	DMC10	SDC15	SDC25/26 SDC35/36	AUR350C AUR450C
	Pin No.	Pin No.	Pin No.	Pin No.
DA	4	16	22	DA
DB	5	17	23	DB
SG	6	18	24	SG

*2 Set the terminating resistor of GOT as follows.
Set the terminating resistor setting switch of the GOT main unit to "Disable".

➠ ■3. Connecting terminating resistors

*3 Connect FG grounding to the single-sided end of a cable shield line.

(6) RS485 connection diagram 6)

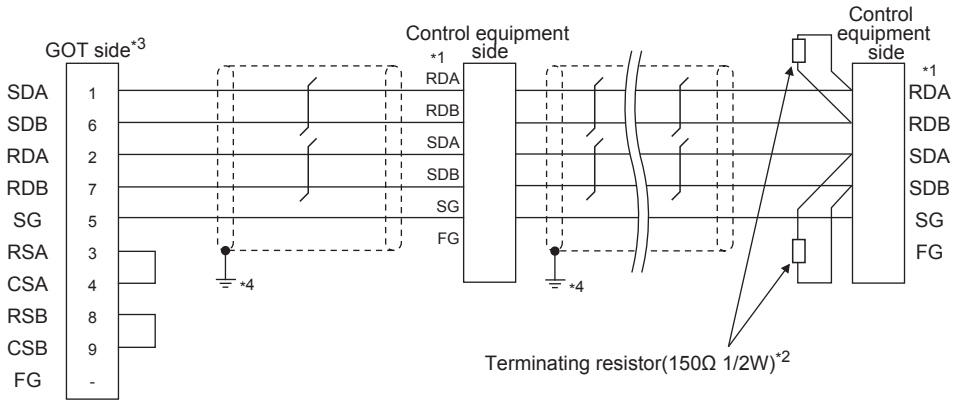

*1 Pin No. of control equipment differs depending on model or optional function model.
Refer to the following table. The numbers in ( ) of the following table correspond to optional function models.

Signal name	Model of control equipment						
	SDC20		SDC21	SDC30	SDC31		SDC40A/40B/40G
	(02, 04)	(09)	(03, 06, 08)	(040, 041)	(045)	(446, 546)	
	Pin No.	Pin No.	Pin No.	Pin No.	Pin No.	Pin No.	Pin No.
RDA	17	18	27	18	18	27	59
RDB	18	19	28	19	19	28	60
SDA	15	16	25	16	16	25	57
SDB	16	17	26	17	17	26	58
SG	5	5	29	5	5	29	61
FG	3, 4	3, 4	3, 4	3, 4	3, 4	3, 4	3

Signal name	Model of control equipment			
	CMF050 CML	PBC201-VN2	CMC10B	AHC2001
	Pin No.	Pin No.	Pin No.	Pin No.
RDA	9	12	11	3
RDB	10	13	12	2
SDA	7	14	13	5
SDB	8	15	14	4
SG	12	16	15	1
FG	19	3	-	-

*2 Terminating resistor should be provided for a control equipment which will be a terminal.

*3 Set the terminating resistor of GOT as follows.
Set the terminating resistor setting switch of the GOT main unit to "100 OHM".
Set the terminating resistor selector to "330Ω".
➠ ■3. Connecting terminating resistors

*4 Connect FG grounding to the single-sided end of a cable shield line.

(7) RS485 connection diagram 7)

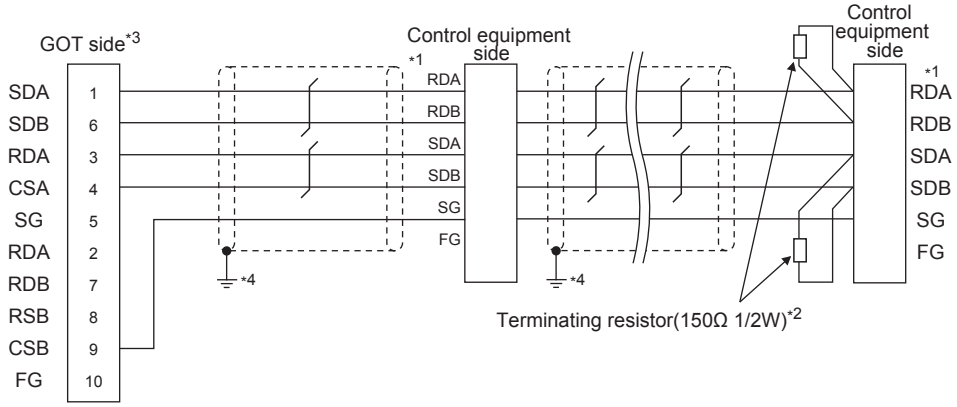

*1 Pin No. of control equipment differs depending on model or optional function model.
Refer to the following table. The numbers in ( ) of the following table correspond to optional function models.

Signal name	Model of control equipment						
	SDC20		SDC21	SDC30	SDC31		SDC40A/40B/40G
	(02, 04)	(09)	(03, 06, 08)	(040, 041)	(045)	(446, 546)	
	Pin No.	Pin No.	Pin No.	Pin No.	Pin No.	Pin No.	Pin No.
RDA	17	18	27	18	18	27	59
RDB	18	19	28	19	19	28	60
SDA	15	16	25	16	16	25	57
SDB	16	17	26	17	17	26	58
SG	5	5	29	5	5	29	61
FG	3, 4	3, 4	3, 4	3, 4	3, 4	3, 4	3

Signal name	Model of control equipment			
	CMF050 CML	PBC201-VN2	CMC10B	AHC2001
	Pin No.	Pin No.	Pin No.	Pin No.
RDA	9	12	11	3
RDB	10	13	12	2
SDA	7	14	13	5
SDB	8	15	14	4
SG	12	16	15	1
FG	19	3	-	-

*2 Terminating resistor should be provided for a control equipment which will be a terminal.

*3 Set the terminating resistor of GOT as follows.
Set the terminating resistor setting switch of the GOT main unit to "100 OHM".

➠ ■3. Connecting terminating resistors

*4 Connect FG grounding to the single-sided end of a cable shield line.

(8) RS485 connection diagram 8)

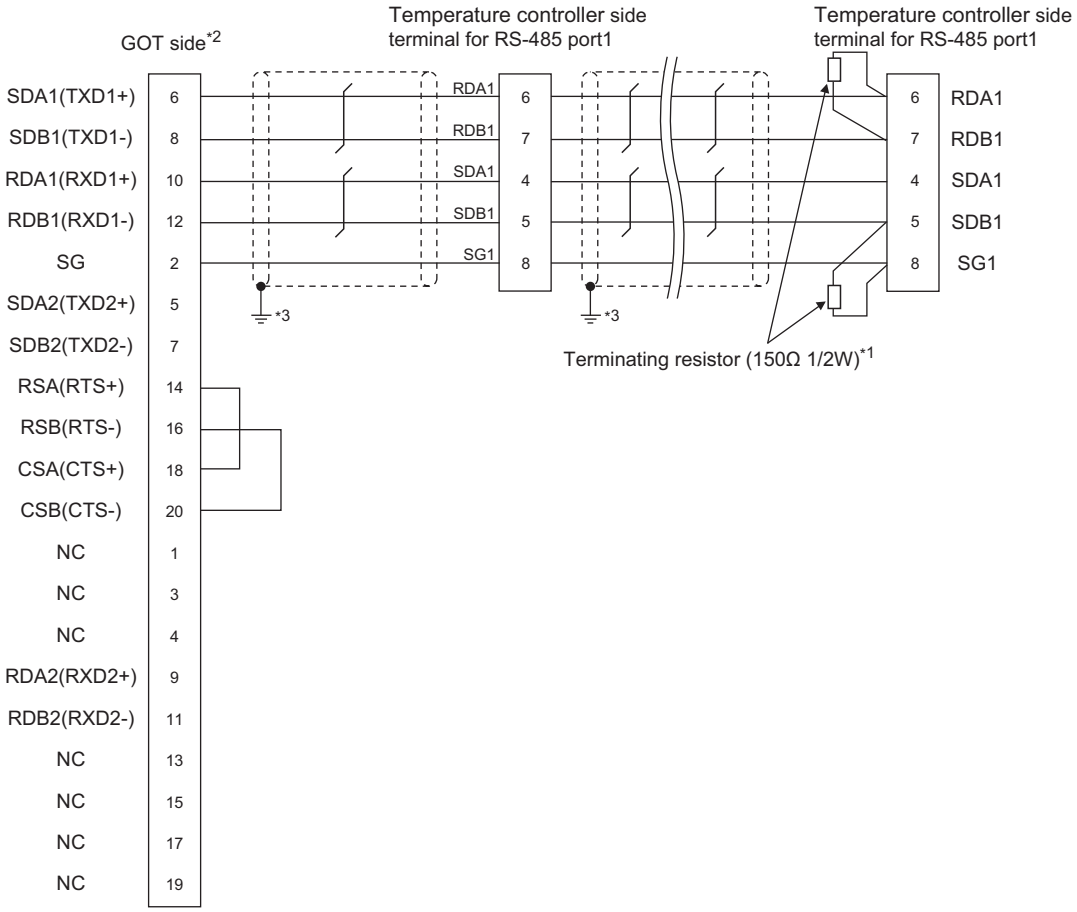

*1 Terminating resistor should be provided for a temperature controller which will be a terminal.

*2 Set the terminating resistor of GOT as follows.
Set the terminating resistor setting switch of the GOT main unit to "100 OHM".

➠ ■3. Connecting terminating resistors

*3 Connect FG grounding to the single-sided end of a cable shield line.

(9) RS485 connection diagram 9)

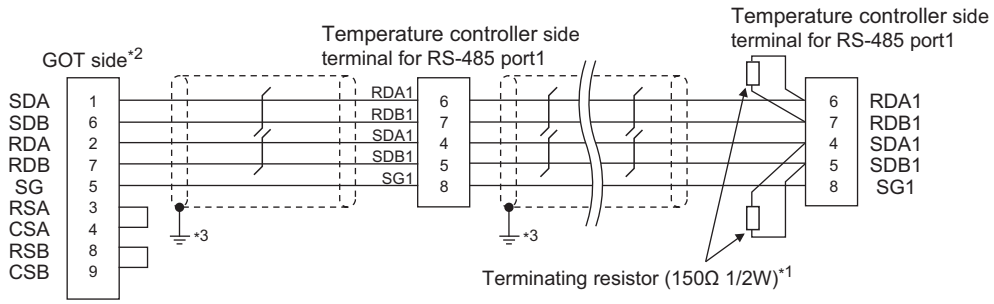

*1 Terminating resistor should be provided for a temperature controller which will be a terminal.

*2 Set the terminating resistor of GOT as follows.
Set the terminating resistor setting switch of the GOT main unit to "100 OHM".

➠ ■3. Connecting terminating resistors

*3 Connect FG grounding to the single-sided end of a cable shield line.

(10) RS485 connection diagram 10)

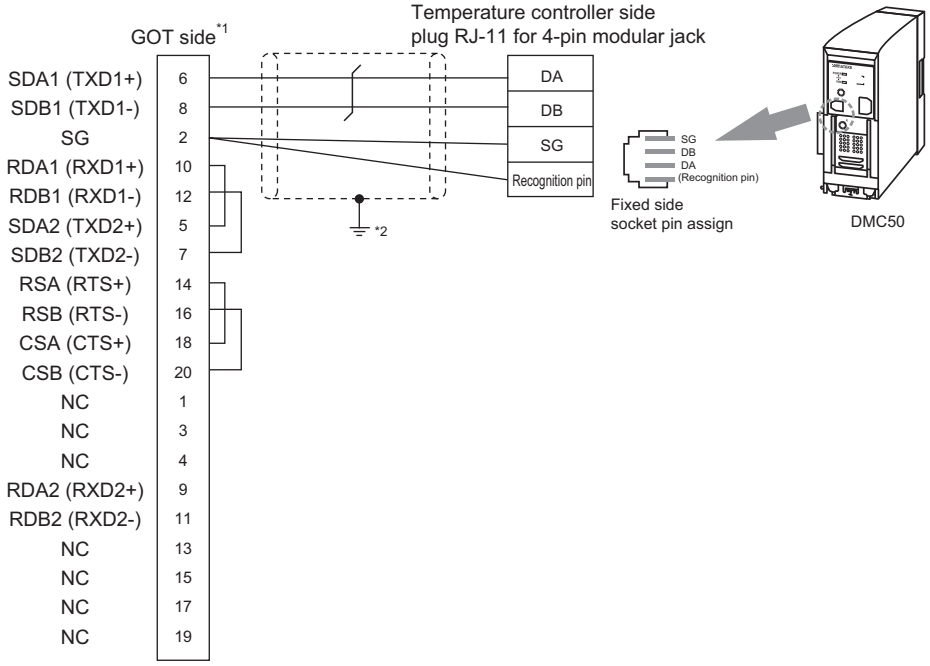

*1 Set the terminating resistor of GOT as follows.
Set the terminating resistor setting switch of the GOT main unit to "100 OHM".

➠ ■3. Connecting terminating resistors

*2 Connect FG grounding to the single-sided end of a cable shield line.

(11) RS485 connection diagram 11)

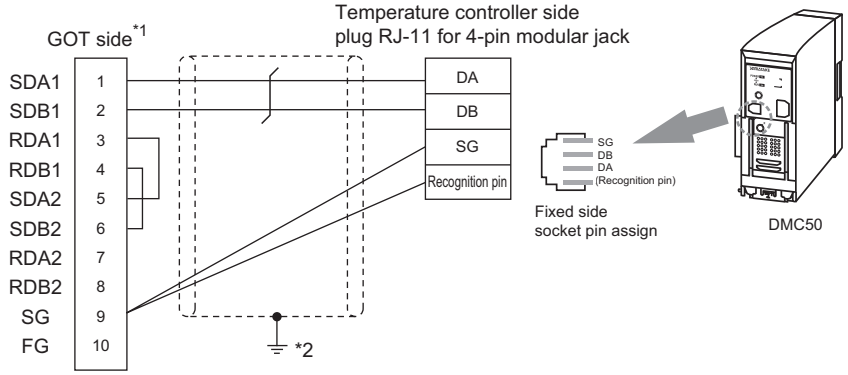

*1 Set the terminating resistor of GOT as follows.
Set the terminating resistor setting switch of the GOT main unit to "100 OHM".

➠ ■3. Connecting terminating resistors

*2 Connect FG grounding to the single-sided end of a cable shield line.

(12) RS485 connection diagram 12)

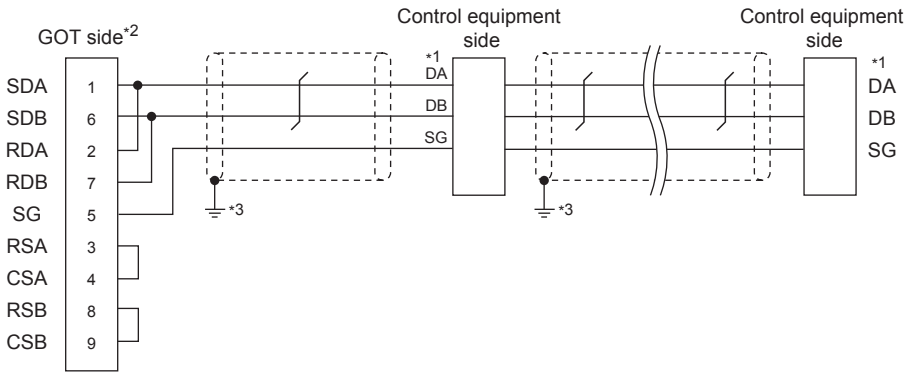

*1 Pin No. of control equipment differs depending on the model. Refer to the following table.

Signal name	Model of control equipment			
	DMC10	SDC15	SDC25/26 SDC35/36	AUR350C AUR450C
	Pin No.	Pin No.	Pin No.	Pin No.
DA	4	16	22	DA
DB	5	17	23	DB
SG	6	18	24	SG

*2 Set the terminating resistor setting switch of the GOT main unit to "100 OHM".

➠ ■3. Connecting terminating resistors

*3 Connect FG grounding to the single-sided end of a cable shield line.

(13) RS485 connection diagram 13)

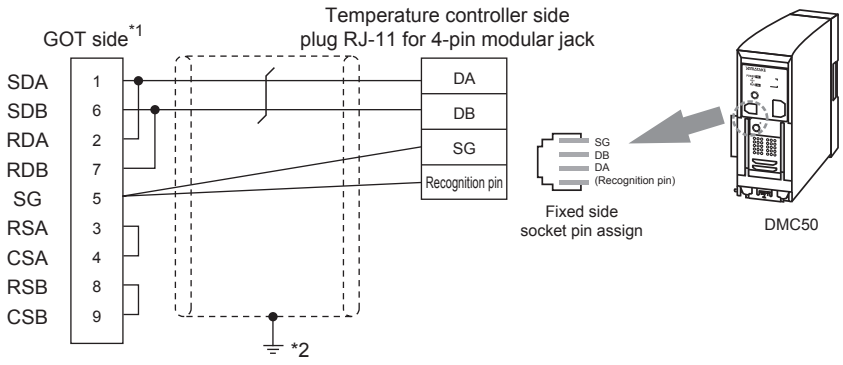

*1 Set the terminating resistor setting switch of the GOT main unit to "100 OHM".

➠ ■3. Connecting terminating resistors

*2 Connect FG grounding to the single-sided end of a cable shield line.

(14) RS485 connection diagram 14)

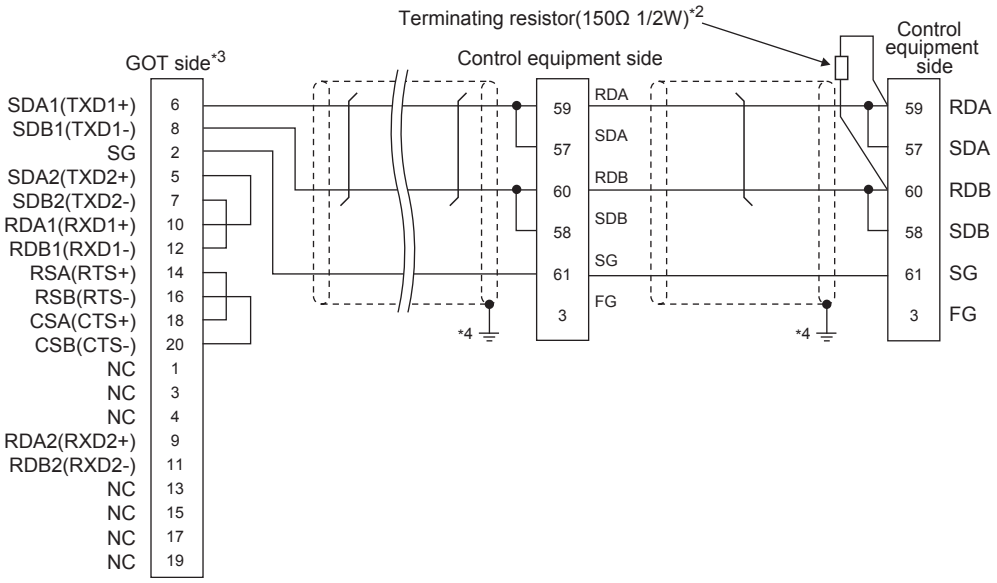

*1 Pin No. of control equipment differs depending on the model. Refer to the following table.

Signal name	Model of control equipment						
	SDC20		SDC21	SDC30	SDC31		SDC40A/40B/40G
	(02, 04)	(09)	(03, 06, 08)	(040, 041)	(045)	(446, 546)	
	Pin No.	Pin No.	Pin No.	Pin No.	Pin No.	Pin No.	Pin No.
RDA	17	18	27	18	18	27	59
RDB	18	19	28	19	19	28	60
SDA	15	16	25	16	16	25	57
SDB	16	17	26	17	17	26	58
SG	5	5	29	5	5	29	61
FG	3, 4	3, 4	3, 4	3, 4	3, 4	3, 4	3

Signal name	Model of control equipment			
	CMF050 CML	PBC201-VN2	CMC10B	AHC2001
	Pin No.	Pin No.	Pin No.	Pin No.
RDA	9	12	11	3
RDB	10	13	12	2
SDA	7	14	13	5
SDB	8	15	14	4
SG	12	16	15	1
FG	19	3	-	-

*2 Terminating resistor should be provided for a control equipment which will be a terminal.

*3 Set the terminating resistor of GOT as follows.
Set the terminating resistor setting switch of the GOT main unit to "100 OHM".

➠ ■3. Connecting terminating resistors

*4 Connect FG grounding to the single-sided end of a cable shield line.

(15) RS485 connection diagram 15)

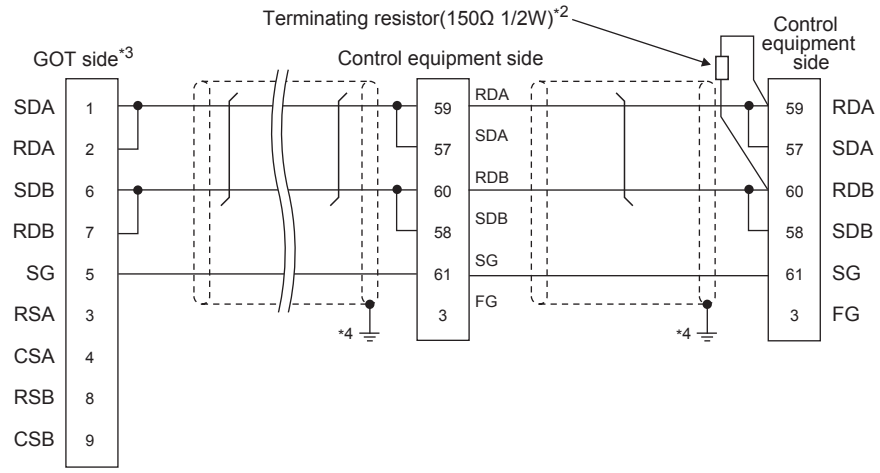

*1 Pin No. of control equipment differs depending on the model. Refer to the following table.

Signal name	Model of control equipment			
	SDC20		SDC21	SDC40A/40B/40G
	(02, 04)	(09)	(03, 06, 08)	
	Pin No.	Pin No.	Pin No.	Pin No.
RDA	17	18	27	59
RDB	18	19	28	60
SDA	15	16	25	57
SDB	16	17	26	58
SG	5	5	29	61
FG	3, 4	3, 4	3, 4	3

Signal name	Model of control equipment			
	CMF050 CML	PBC201-VN2	CMC10B	AHC2001
	Pin No.	Pin No.	Pin No.	Pin No.
RDA	9	12	11	3
RDB	10	13	12	2
SDA	7	14	13	5
SDB	8	15	14	4
SG	12	16	15	1
FG	19	3	-	-

*2 Terminating resistor should be provided for a control equipment which will be a terminal.

*3 Set the terminating resistor setting switch of the GOT main unit to "100 OHM".

➠ ■3. Connecting terminating resistors

*4 Connect FG grounding to the single-sided end of a cable shield line.

(16) RS485 connection diagram 16)

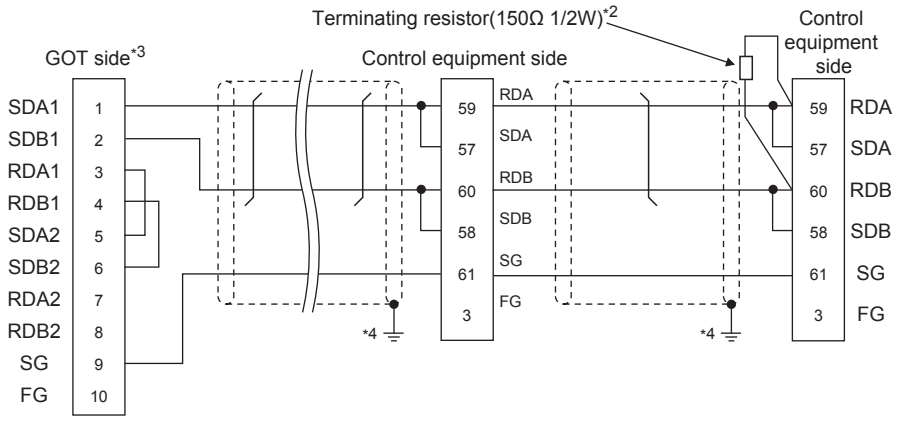

*1 Pin No. of control equipment differs depending on the model. Refer to the following table.

Signal name	Model of control equipment						
	SDC20		SDC21	SDC30	SDC31		SDC40A/40B/40G
	(02, 04)	(09)	(03, 06, 08)	(040, 041)	(045)	(446, 546)	
	Pin No.	Pin No.	Pin No.	Pin No.	Pin No.	Pin No.	Pin No.
RDA	17	18	27	18	18	27	59
RDB	18	19	28	19	19	28	60
SDA	15	16	25	16	16	25	57
SDB	16	17	26	17	17	26	58
SG	5	5	29	5	5	29	61
FG	3, 4	3, 4	3, 4	3, 4	3, 4	3, 4	3

Signal name	Model of control equipment			
	CMF050 CML	PBC201-VN2	CMC10B	AHC2001
	Pin No.	Pin No.	Pin No.	Pin No.
RDA	9	12	11	3
RDB	10	13	12	2
SDA	7	14	13	5
SDB	8	15	14	4
SG	12	16	15	1
FG	19	3	-	-

*2 Terminating resistor should be provided for a control equipment which will be a terminal.

*3 Set the terminating resistor of GOT as follows.
Set the terminating resistor setting switch of the GOT main unit to "100 OHM".

➠ ■3. Connecting terminating resistors

*4 Connect FG grounding to the single-sided end of a cable shield line.

(17) RS485 connection diagram 17)

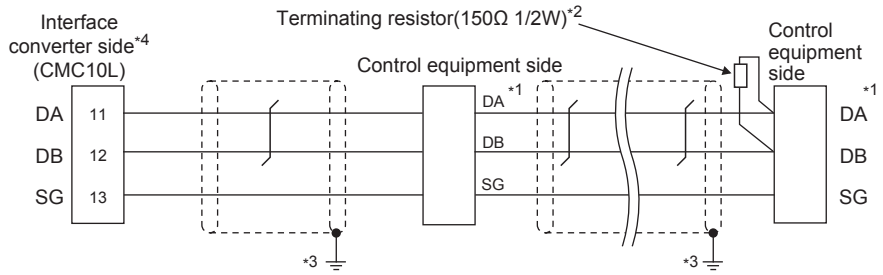

*1 Pin No. of control equipment differs depending on the model. Refer to the following table

Signal name	Model of control equipment				
	SDC45/46	CMS CMF015	MQV MPC	MVF	RX
	Pin No.	Pin No.	Pin No.	Pin No.	Pin No.
DA	C10	5	7	1	1
DB	C11	6	8	2	2
SG	C12	10	9	7	3

*2 Terminating resistor should be provided for an Interface converter and a control equipment which will be terminals.

*3 Connect FG grounding to the single-sided end of a cable shield line.

*4 Since the Interface converter has a built-in terminating resistor, set the terminating resistor of GOT to "Enable". For details of terminating resistor settings, refer to the following.

➠ 3.5.5 Connecting to CMC10L

(18) RS485 connection diagram 18)

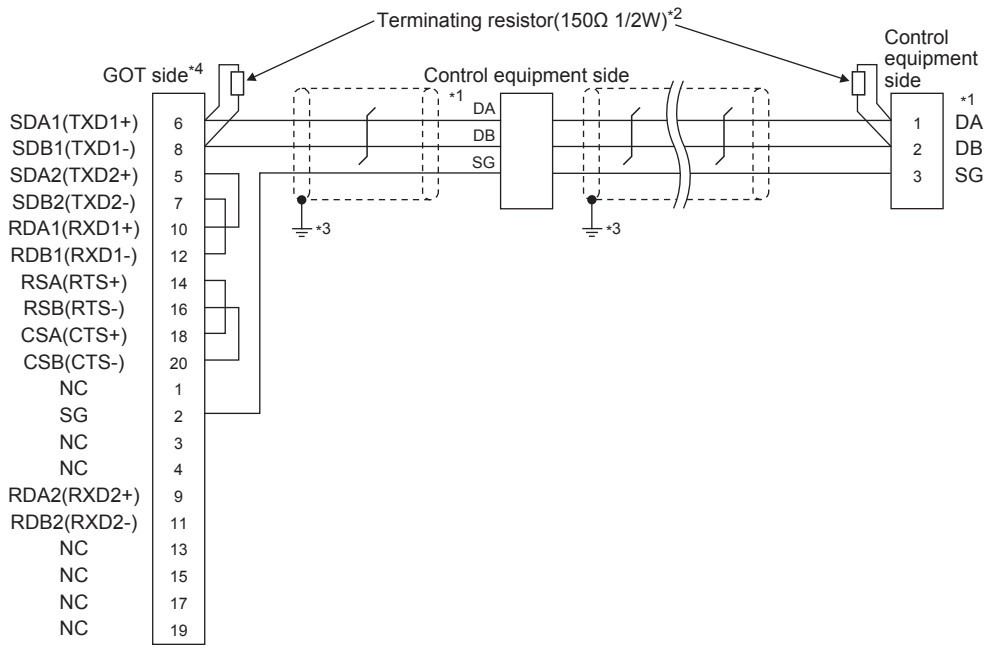

*1 Pin No. of control equipment differs depending on the model. Refer to the following table

Signal name	Model of control equipment				
	SDC45/46	CMS CMF015	MQV MPC	MVF	RX
	Pin No.	Pin No.	Pin No.	Pin No.	Pin No.
DA	C10	5	7	1	1
DB	C11	6	8	2	2
SG	C12	10	9	7	3

*2 Terminating resistor should be provided for an Interface converter and a control equipment which will be terminals.

*3 Connect FG grounding to the single-sided end of a cable shield line.

*4 Set the terminating resistor of GOT as follows.
Set the terminating resistor setting switch of the GOT main unit to "Disable".

➠ ■3. Connecting terminating resistors

(19) RS485 connection diagram 19)

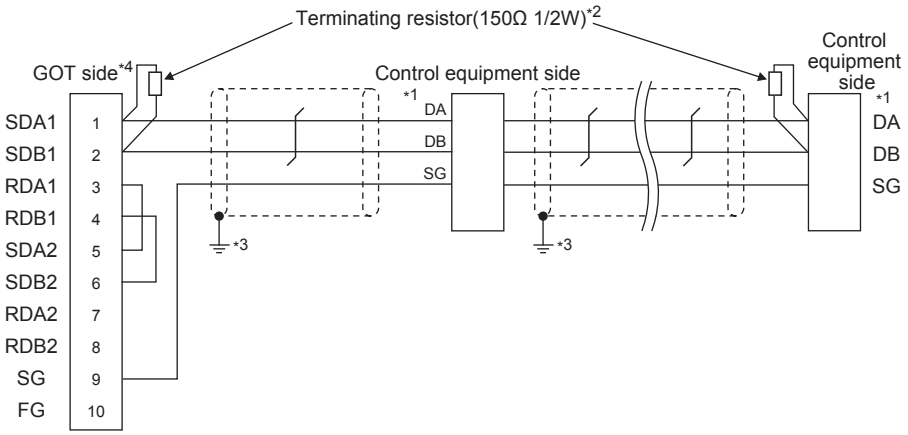

*1 Pin No. of control equipment differs depending on the model. Refer to the following table

Signal name	Model of control equipment				
	SDC45/46	CMS CMF015	MQV MPC	MVF	RX
	Pin No.	Pin No.	Pin No.	Pin No.	Pin No.
DA	C10	5	7	1	1
DB	C11	6	8	2	2
SG	C12	10	9	7	3

*2 Terminating resistor should be provided for an Interface converter and a control equipment which will be terminals.
*3 Connect FG grounding to the single-sided end of a cable shield line.
*4 Set the terminating resistor of GOT as follows.
Set the terminating resistor setting switch of the GOT main unit to "Disable".

➠ ■3. Connecting terminating resistors

(20) RS485 connection diagram 20)

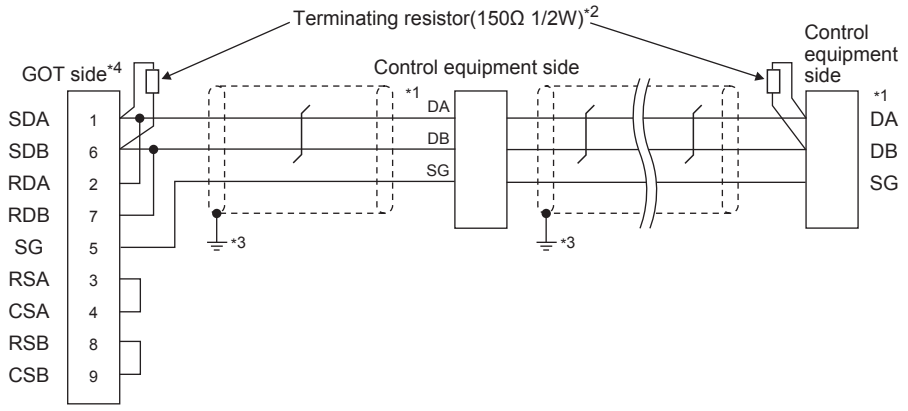

*1 Pin No. of control equipment differs depending on the model. Refer to the following table

Signal name	Model of control equipment				
	SDC45/46	CMS CMF015	MQV MPC	MVF	RX
	Pin No.	Pin No.	Pin No.	Pin No.	Pin No.
DA	C10	5	7	1	1
DB	C11	6	8	2	2
SG	C12	10	9	7	3

*2 Terminating resistor should be provided for an Interface converter and a control equipment which will be terminals.
*3 Connect FG grounding to the single-sided end of a cable shield line.
*4 Set the terminating resistor of GOT as follows.
Set the terminating resistor setting switch of the GOT main unit to "Disable".

➠ ■3. Connecting terminating resistors

(21) RS485 connection diagram 21)

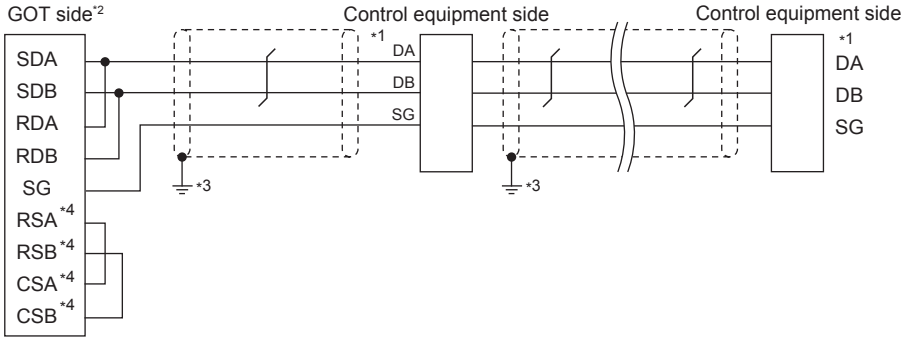

*1 Pin No. of control equipment differs depending on the model. Refer to the following table.

Signal name	Model of control equipment			
	DMC10	SDC15	SDC25/26 SDC35/36	AUR350C AUR450C
	Pin No.	Pin No.	Pin No.	Pin No.
DA	4	16	22	DA
DB	5	17	23	DB
SG	6	18	24	SG

*2 Set the terminating resistor setting switch of the GOT main unit to "110Ω".

➠ ■3. Connecting terminating resistors

*3 Connect FG grounding to the single-sided end of a cable shield line.

*4 The signals RSA, RSB, CSA, and CSB are not provided for GT 03P 04P ET/R4. Return connection is not required.

(22) RS485 connection diagram 22)

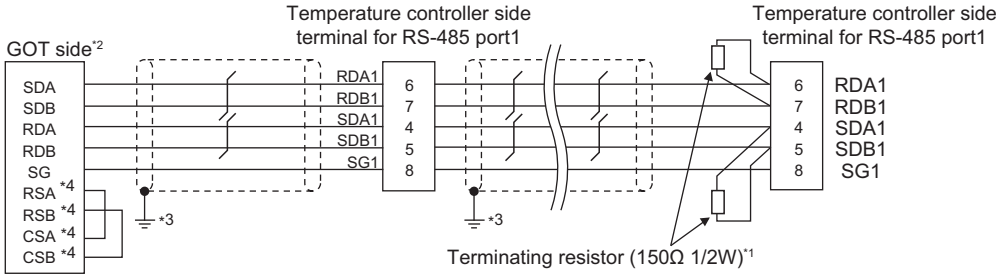

*1 Terminating resistor should be provided for a temperature controller which will be a terminal.

*2 Set the terminating resistor of GOT as follows.
Set the terminating resistor setting switch of the GOT main unit to "330Ω".

➠ ■3. Connecting terminating resistors

*3 Connect FG grounding to the single-sided end of a cable shield line.

*4 The signals RSA, RSB, CSA, and CSB are not provided for GT 03P 04P ET/R4. Return connection is not required.

(23) RS485 connection diagram 23)

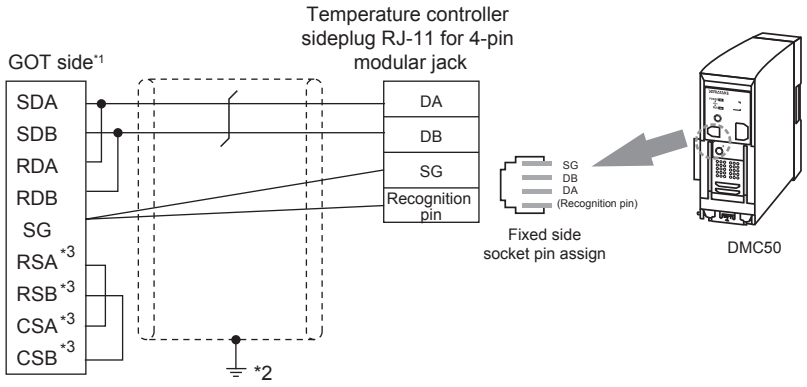

*1 Set the terminating resistor setting switch of the GOT main unit to "110Ω".

➠ ■3. Connecting terminating resistors

*2 Connect FG grounding to the single-sided end of a cable shield line.

*3 The signals RSA, RSB, CSA, and CSB are not provided for GT 22 03P 04P ET/R4. Return connection is not required.

(24) RS485 connection diagram 24)

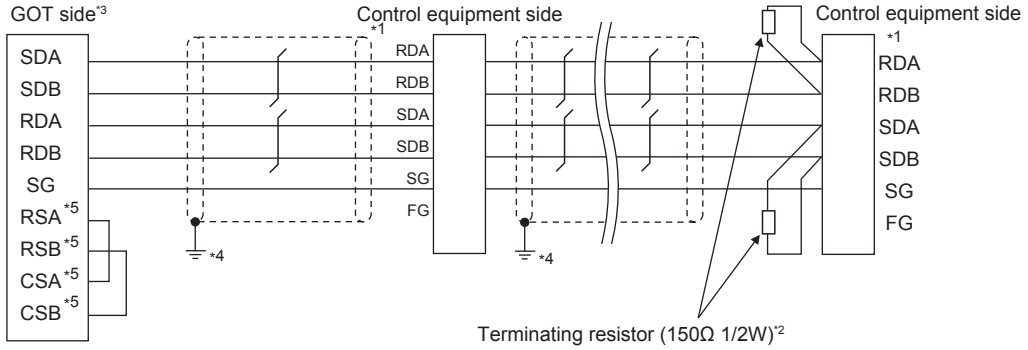

*1 Pin No. of control equipment differs depending on model and optional function model.
Refer to the following table. The numbers in ( ) of the following table correspond to optional function models.

Signal name	Model of control equipment						
	SDC20		SDC21	SDC30	SDC31		SDC40A/40B/40G
	(02, 04)	(09)	(03, 06, 08)	(040, 041)	(045)	(446, 546)	
	Pin No.	Pin No.	Pin No.	Pin No.	Pin No.	Pin No.	Pin No.
RDA	17	18	27	18	18	27	59
RDB	18	19	28	19	19	28	60
SDA	15	16	25	16	16	25	57
SDB	16	17	26	17	17	26	58
SG	5	5	29	5	5	29	61
FG	3, 4	3, 4	3, 4	3, 4	3, 4	3, 4	3

Signal name	Model of control equipment			
	CMF050 CML	PBC201-VN2	CMC10B	AHC2001
	Pin No.	Pin No.	Pin No.	Pin No.
RDA	9	12	11	3
RDB	10	13	12	2
SDA	7	14	13	5
SDB	8	15	14	4
SG	12	16	15	1
FG	19	3	-	-

*2 Terminating resistor should be provided for a control equipment which will be a terminal.

*3 Set the terminating resistor of GOT as follows.
Set the terminating resistor setting switch of the GOT main unit to "330Ω".

➠ ■3. Connecting terminating resistors

*4 Connect FG grounding to the single-sided end of a cable shield line.

*5 The signals RSA, RSB, CSA, and CSB are not provided for GT 2103P 2104P ET/R4. Return connection is not required.

(25) RS485 connection diagram 25)

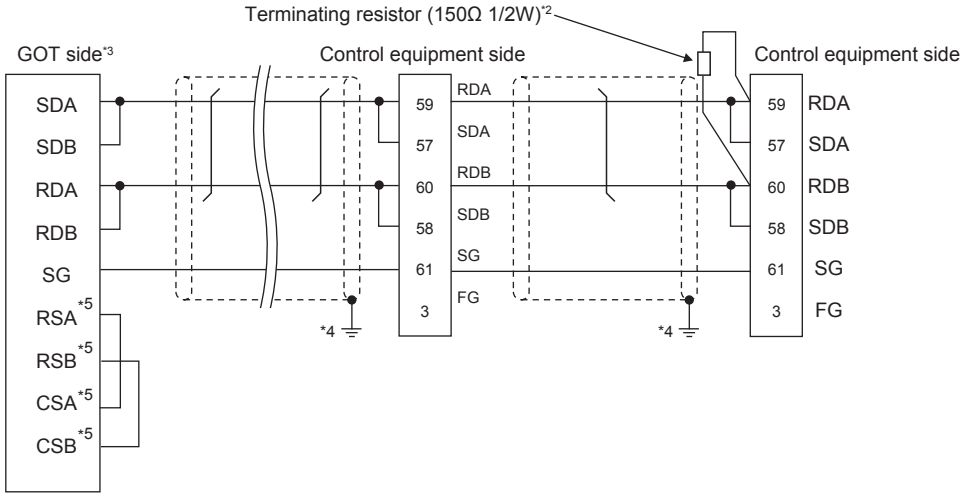

*1 Pin No. of control equipment differs depending on the model. Refer to the following table.

Signal name	Model of control equipment			
	SDC20		SDC21	SDC40A/40B/40G
	(02, 04)	(09)	(03, 06, 08)	
	Pin No.	Pin No.	Pin No.	Pin No.
RDA	17	18	27	59
RDB	18	19	28	60
SDA	15	16	25	57
SDB	16	17	26	58
SG	5	5	29	61
FG	3, 4	3, 4	3, 4	3

Signal name	Model of control equipment			
	CMF050 CML	PBC201-VN2	CMC10B	AHC2001
	Pin No.	Pin No.	Pin No.	Pin No.
RDA	9	12	11	3
RDB	10	13	12	2
SDA	7	14	13	5
SDB	8	15	14	4
SG	12	16	15	1
FG	19	3	-	-

*2 Terminating resistor should be provided for a control equipment which will be a terminal.

*3 Set the terminating resistor setting switch of the GOT main unit to "110Ω".

➠ ■3. Connecting terminating resistors

*4 Connect FG grounding to the single-sided end of a cable shield line.

*5 The signals RSA, RSB, CSA, and CSB are not provided for GT21 03P 04P ET/R4. Return connection is not required.

(26) RS485 connection diagram 26)

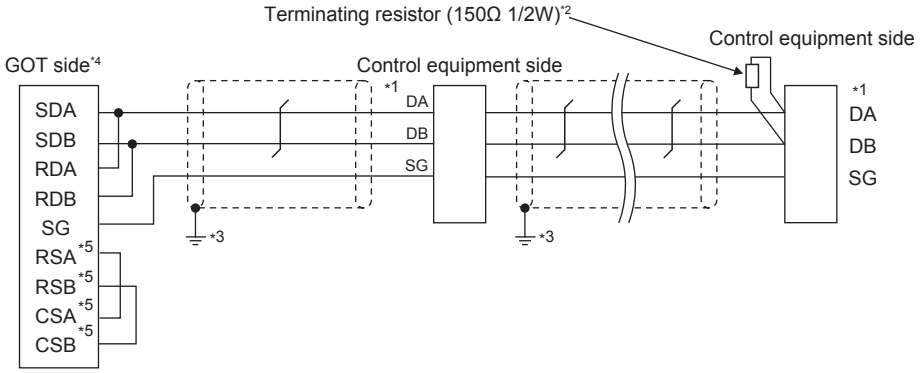

*1 Pin No. of control equipment differs depending on the model. Refer to the following table.

Signal name	Model of control equipment				
	SDC45/46	CMS CMF015	MQV MPC	MVF	RX
	Pin No.	Pin No.	Pin No.	Pin No.	Pin No.
DA	C10	5	7	1	1
DB	C11	6	8	2	2
SG	C12	10	9	7	3

*2 Terminating resistor should be provided for an Interface converter and a control equipment which will be terminals.

*3 Connect FG grounding to the single-sided end of a cable shield line.

*4 Set the terminating resistor of GOT as follows.
Set the terminating resistor setting switch of the GOT main unit to "110Ω".

➠ ■3. Connecting terminating resistors

*5 The signals RSA, RSB, CSA, and CSB are not provided for GT21 03P 04P ET/R4. Return connection is not required.

■2. Precautions when preparing a cable

(1) Cable length

The length of the RS-485 cable must be 500m or less.

(2) GOT side connector

For the GOT side connector, refer to the following.

➠ 1.4.1 GOT connector specifications

(3) AZBIL control equipment side connector

Use the connector compatible with the AZBIL control equipment side module.
For details, refer to the user's manual of the AZBIL control equipment.

■3. Connecting terminating resistors

(1) GOT side

Set the terminating resistor by operating the terminating resistor setting switch.
For the procedure to set the terminating resistor, refer to the following.

➠ 1.4.3 Terminating resistors of GOT

(2) AZBIL control equipment side

When connecting a AZBIL control equipment to the GOT, a terminating resistor must be connected.

➠ 3.5 Control Equipment Side Setting

3.4.1 Setting communication interface (Communication settings)

Set the channel of the connected equipment.

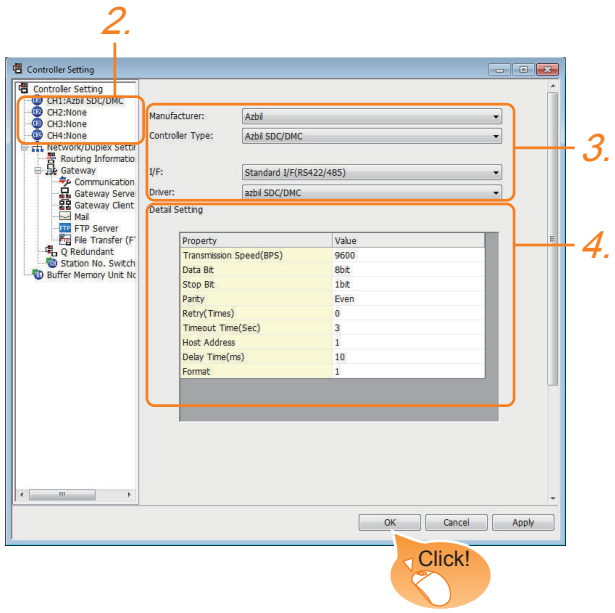

Step 1. Select [Common] → [Controller Setting] from the menu.

Step 2. The Controller Setting window is displayed. Select the channel to be used from the list menu.

Step 3. Set the following items.

- Manufacturer: Azbil
- Controller Type: Set either of the followings.
  <Connecting to DMC50 and AHC2001>
  Azbil DMC50
  <Connecting to a module other than above>
  Azbil SDC/DMC
- I/F: Interface to be used
- Driver: Azbil SDC/DMC

Step 4. The detailed setting is displayed after Manufacturer, Controller Type, I/F, and Driver are set. Make the settings according to the usage environment.

➠ 3.4.2 Communication detail settings

Click the [OK] button when settings are completed.

POINT

The settings of connecting equipment can be confirmed in [I/F Communication Setting]. For details, refer to the following.

➠ 1.1.2 I/F communication setting

3.4.2 Communication detail settings

Property	Value
Transmission Speed(BPS)	9600
Data Bit	8 bit
Stop Bit	1 bit
Parity	Even
Retry(Times)	0
Timeout Time(Sec)	3
Host Address	1
Delay Time(ms)	10
Format	1

Item	Description	Range
Transmission Speed	Set this item when change the transmission speed used for communication with the connected equipment. (Default: 9600bps)	9600bps, 19200bps, 38400bps, 57600bps, 115200bps
Data Bit	Set this item when change the data length used for communication with the connected equipment. (Default: 8bits)	7bits/8bits
Stop Bit	Specify the stop bit length for communications. (Default: 1bit)	1bit/2bits
Parity	Specify whether or not to perform a parity check, and how it is performed during communication. (Default: Even)	None Even Odd
Retry	Set the number of retries to be performed when a communication error occurs. (Default: 0time)	0 to 5times
Timeout Time	Set the time period for a communication to time out. (Default: 3sec)	1 to 30sec
Host Address*3*4	Specify the host address (station No. of the GOT to which the temperature controller is connected) in the connected network. (Default: 1)	1 to 15
Delay Time	Set this item to adjust the transmission timing of the communication request from the GOT.*1 (Default: 1ms)	0 to 300ms
Format*2	Select the communication format. (Default: 1) format 1: only continuous access format 2: continuous and random access	1/2

*1 Do not specify "0".
*2 Format is ignored when connecting to DMC50.
*3 Host Address is ignored when connecting to DMC10 or SDC.
*4 Host Address is valid when connecting to DMC50.
Devices to be the target of Host Address setting differ depending on the system configuration.
<When connecting to the temperature controller via COM module>
Specify the station No. of the COM module.
<When connecting to the temperature controller directly>
Specify the station No. of the temperature controller.

POINT

Format setting

The compatible format of control equipment differs depending on model.

Model name	Compatible format
SDC20/21, SDC30/31, SDC40A/40B/40G, CMS, CMF, CML, MQV, MPC, MVF, PBC201-VN2, RX	Format 1 only
DMC10, SDC15, SDC25/26, SDC35/36, SDC45/46, AUR350C, AUR450C, CMC10B	Format 1 or Format 2
DMC50, AHC2001	The format setting is invalid.

For the continuous access and random access of the control equipment, refer to the following manual.

➠ User's Manual of the AZBIL control equipment

POINT

(1) Communication interface setting by the Utility

The communication interface setting can be changed on the Utility's [Communication setting] after writing [Communication Settings] of project data.

For details on the Utility, refer to the following manual.

➠ GOT2000 Series User's Manual (Utility)

(2) Precedence in communication settings

When settings are made by GT Designer3 or the Utility, the latest setting is effective.

POINT

AZBIL control equipment

For details of AZBIL control equipment, refer to the following manual.

➠ User's Manual of the AZBIL control equipment

Model name		Refer to
Control equipment	DMC10	3.5.1
	SDC15, SDC25/26, SDC35/36	3.5.3
	SDC20/21	3.5.4
	SDC30/31	3.5.4
	SDC40A/40B/40G	3.5.2
	DMC50	3.5.6
	SDC45/46	3.5.7
	CMS, CMF015	3.5.8
	CML, CMF050	3.5.9
	MQV	3.5.10
	MPC	3.5.11
	PBC201-VN2	3.5.12
	MVF	3.5.13
	AUR350C, AUR450C	3.5.14
	RX	3.5.15
	CMC10B	3.5.16
	AHC2001 CPU	3.5.17
	AHC2001 SCU	3.5.18
Interface converter	CMC10L	3.5.5

3.5.1 Connecting to DMC10

■1. Communication settings

Make the communication settings by operating the Smart Loader Package (SLP-D10) of the temperature controller.

Item	Set value
Transmission speed*1	9600bps, 19200bps
Communication mode*2	CPL
Data bit	8bits
Parity bit*1	Even, none
Stop bit	2bits
Communication minimum response time	1ms, 10ms, 100ms, 200ms
Station address*3*4	0 to F

*1 Adjust the settings with GOT settings.
*2 Set to CPL.
*3 Do not set to "0".
*4 Select the station address without overlapping with that of other units.

■2. Station address setting

Set the station address using the rotary switch for the station address.

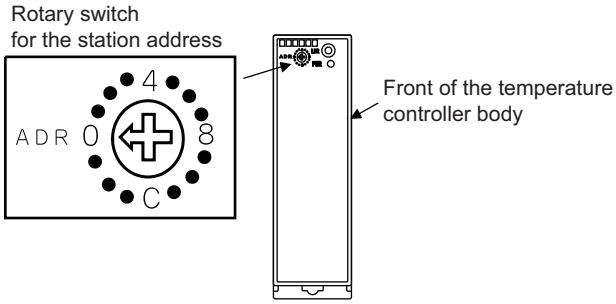

3.5.2 Connecting to SDC40A/40B/40G

■1. Communication settings

Make the communication settings by operating the key of the temperature controller.

Item	Set value
Transmission speed*1	9600bps
Data Bit	8bits
Parity bit*1	Even, none
Stop bit	1bit, 2bits
Station address*2*3	0 to 127

*1 The transmission speed setting must be consistent with that of the GOT side.
*2 Do not set to "0".
*3 Select the station address without overlapping with that of other units.

3.5.3 Connecting to SDC15, SDC25/26 or SDC35/36

■1. Communication settings

Make the communication settings by operating the key or Smart Loader Package (SLP-C35) of the temperature controller.

Item	Set value
Transmission speed*1	9600bps, 19200bps
Communication mode*2	CPL
Data bit*1	7bits, 8bits
Parity bit*1	Odd, even, none
Stop bit*1	1bit, 2bits
Communication minimum response time	1 to 250ms
Station address*3*4	0 to 127

*1 The transmission speed setting must be consistent with that of the GOT side.
*2 Set to CPL.
*3 Do not set to "0".
*4 Select the station address without overlapping with that of other units.

3.5.4 Connecting to SDC20/21, SDC30/31

■1. Communication settings

Make the communication settings by operating the key of the temperature controller.

Item	Set value
Transmission speed*1	9600bps
Data bit	8bits
Parity bit	Disable
Stop bit	2bits
Station address*2*3	0 to 127

*1 The transmission speed setting must be consistent with that of the GOT side.
*2 Do not set to "0".
*3 Select the station address without overlapping with that of other units.

3.5.5 Connecting to CMC10L

■1. Communication settings

Make the communication settings by operating the DIP switch of the Interface converter

Item	Set value
Transmission speed*1	9600bps, 19200bps, 38400bps
Frame length*2	9 to 15bits

*1 The transmission speed setting must be consistent with that of the GOT side.
*2 The sum of data length, parity bit and stop bit

■2. Settings by switch

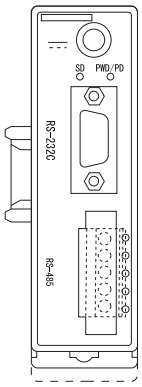

Front view of CMC10L body

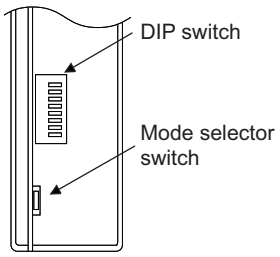

Rear view of CMC10L body

(1) Setting DIP switches

(a) Transmission speed settings

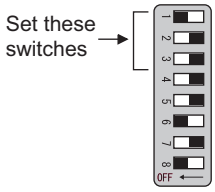

Transmission speed (bps)	Switch No.		
	1	2	3
9600	ON	OFF	ON
19200	OFF	ON	ON
38400	ON	ON	ON

(b) Frame length settings

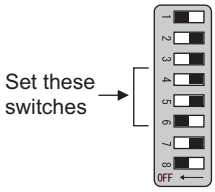

Frame length	Switch No.		
	4	5	6
8bits	OFF	OFF	OFF
9bits	ON	OFF	OFF
10bits	OFF	ON	OFF
11bits	ON	ON	OFF
12bits	OFF	OFF	ON
13bits	ON	OFF	ON
14bits	OFF	ON	ON
15bits	ON	ON	ON

(c) Connecting terminating resistors

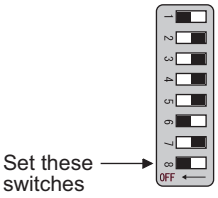

Terminating resistor	Switch No.
	8
Enable	ON
Disable	OFF

(2) Mode selector switch settings

Set the switch to “TERMINAL”.

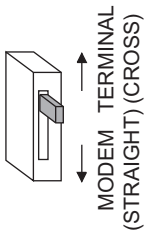

3.5.6 Connecting to DMC50

■1. Communication settings

Make the communication settings by operating the Smart Loader Package (SLP-D50/SLP-H21)of the temperature controller.

Item	Set value
Transmission speed*1	9600bps, 19200bps, 38400bps
Communication mode	CPL
Data bit	8bits (fixed)
Parity bit	Even (fixed)
Stop bit	1bit (fixed)
Module address*2*3*4	0 to F

*1 Adjust the settings with GOT settings.
*2 Set the module address using the rotary switch for module address.
*3 Do not set to "0".
*4 Select the module address without overlapping with that of other units.

■2. Module address setting

Set the module address using the rotary switch for module address.

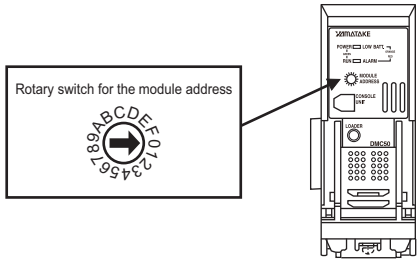

3.5.7 Connecting to SDC45/46

■1. Communication settings

Make the communication settings by operating the Smart Loader Package (SLP-C45) of the temperature controller.

Item	Set value
Transmission speed*1	9600bps, 19200bps, 38400bps
Communication mode*2	CPL
Data bit	7bits, 8bits
Parity bit*1	Odd, even, none
Stop bit	1bit, 2bits
Communication minimum response time*5	1 to 250ms
Station address*3*4	0 to 120

*1 Adjust the settings with GOT settings.
*2 Set to CPL.
*3 Do not set to "0".
*4 Select the station address without overlapping with that of other units.
*5 When using the interface converter CMC10L, set the communication minimum response time to 3ms or more.

3.5.8 Connecting to CMS, CMF015

■1. Communication settings

Make the communication settings by operating the key of the control equipment.

Item	Set value
Transmission speed*1	9600bps
Communication condition selection	0: 8-bit data length, Even parity, Stop bit 1
	1: 8-bit data length, Non parity, Stop bit 2
Station address*2*3	0 to 99

*1 Adjust the settings with GOT settings.
*2 Do not set to "0".
*3 Select the station address without overlapping with that of other units.

3.5.9 Connecting to CML, CMF050

■1. Communication settings

Make the communication settings by operating the key of the control equipment.

Item	Set value
Transmission speed*1	9600bps
Communication condition selection*1	00: 8-bit data length, Even parity, Stop bit 1
	01: 8-bit data length, Non parity, Stop bit 2
Station address*2*3	0 to 7F

*1 Adjust the settings with GOT settings.
*2 Do not set to "0".
*3 Select the station address without overlapping with that of other units.

3.5.10 Connecting to MQV

■1. Communication settings

Make the communication settings by operating the key of the control equipment.

Item	Set value
Transmission speed*1	9600bps, 19200bps, 38400bps
Communication condition selection*1	00: 8-bit data length, Even parity, Stop bit 1
	01: 8-bit data length, Non parity, Stop bit 2
Station address*2*3	0 to 127

*1 Adjust the settings with GOT settings.
*2 Do not set to "0".
*3 Select the station address without overlapping with that of other units.

3.5.11 Connecting to MPC

■1. Communication settings

Make the communication settings by operating the key of the control equipment.

Item	Set value
Transmission speed*1	9600bps, 19200bps, 38400bps
Communication condition selection*1	0: 8-bit data length, Even parity, Stop bit 1
	1: 8-bit data length, Non parity, Stop bit 2
Station address*2*3	0 to 127

*1 Adjust the settings with GOT settings.
*2 Do not set to "0".
*3 Select the station address without overlapping with that of other units.

3.5.12 Connecting to PBC201-VN2

■1. Communication settings

Make the communication settings by operating the key of the control equipment.

Item	Set value
Communication protocol	CPL
Transmission speed*1	9600bps, 19200bps, 38400bps, 115200bps
Communication condition selection*1 (Fixed 8-bit data length)	0:Even parity, Stop bit 1
	1:Odd parity, Stop bit 1
	2:Non parity, Stop bit 2
Station address*2*3	0 to 126

*1 Adjust the settings with GOT settings.
*2 Do not set to "0".
*3 Select the station address without overlapping with that of other units.

3.5.13 Connecting to MVF

■1. Communication settings

Make the communication settings by operating the switch of the control equipment.

Item	Set value
Transmission speed*1	9600bps, 19200bps
Communication condition selection*1	8-bit data length, Even parity, Stop bit 1
	8-bit data length, Non parity, Stop bit 2
Station address*2*3	0 to F

*1 Adjust the settings with GOT settings.
*2 Do not set to "0".
*3 Select the station address without overlapping with that of other units.

■2. Settings by switch

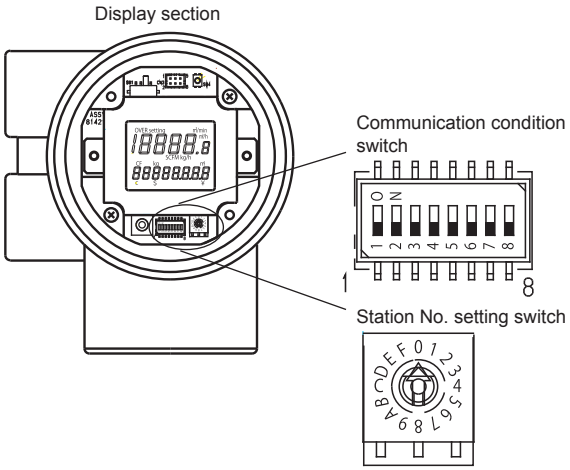

(1) Transmission speed settings

Set the communication condition switch.

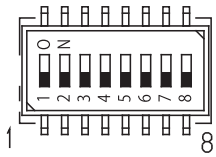

Transmission speed (bps)	Switch No.		
	1	2	3
9600	ON	ON	OFF
19200	ON	OFF	OFF

(2) Communication condition selection

Set the communication condition switch.

Communication condition	Switch No.
	4
8-bit data length, Even parity, Stop bit 1	OFF
8-bit data length, Non parity, Stop bit 2	ON

(3) Station address setting

Set the station address switch.

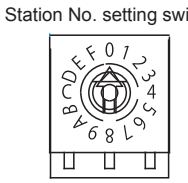

3.5.14 Connecting to AUR350C, AUR450C

■1. Communication settings

Make the communication settings by operating the Smart Loader Package (SLP-A35, SLP-A45) of the control equipment.

Item	Set value
Transmission speed*1	9600bps, 19200bps
Communication condition selection*1	8-bit data length, Even parity, Stop bit 1
	8-bit data length, Non parity, Stop bit 2
Station address*2*3	0 to F

*1 Adjust the settings with GOT settings.
*2 Do not set to "0".
*3 Select the station address without overlapping with that of other units.

■2. Station address setting

Set the station address switch.

(1) For AUR350C

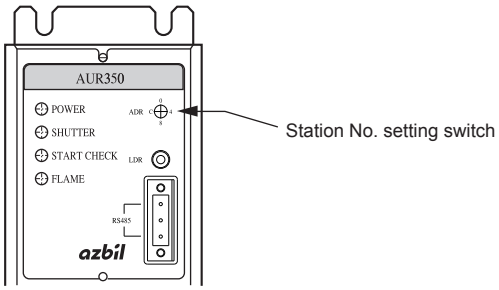

(2) For AUR450C

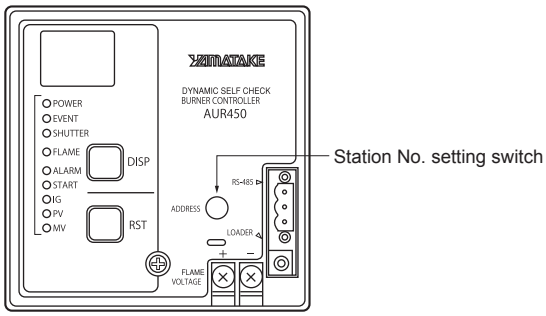

3.5.15 Connecting to RX

■1. Communication settings

Make the communication settings by operating the Smart Loader Package (SLP-RX) of the control equipment.

Item	Set value
Transmission speed*1	9600bps, 19200bps ,38400bps
Communication condition selection*1	Even parity stop 1 (8-bit data length, Even parity, Stop bit 1)
	Even parity stop 2 (8-bit data length, Even parity, Stop bit 2)
	Odd parity stop 1 (8-bit data length, Odd parity, Stop bit 1)
	Odd parity stop 2 (8-bit data length, Odd parity, Stop bit 2)
Station address*2*3	1 to 32

*1 Adjust the settings with GOT settings.
*2 Do not set to "0".
*3 Select the station address without overlapping with that of other units.

3.5.16 Connecting to CMC10B

■1. Communication settings

Make the communication settings by operating the Smart Loader Package (SLP-CM1) of the control equipment.

Item	Set value
Transmission speed*1	9600bps, 19200bps
Communication format*1	0:8-bit data length, Even parity, Stop bit 1
	1:8-bit data length, Non parity, Stop bit 2
Station address*2*3	0 to 99

*1 Adjust the settings with GOT settings.
*2 Do not set to "0".
*3 Select the station address without overlapping with that of other units.

■2. Station address setting

Set the station address switch.

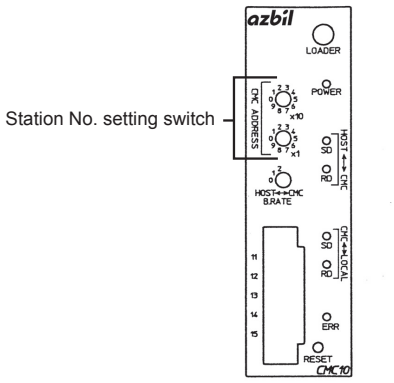

3.5.17 Connecting to AHC2001 CPU

■1. Communication settings

Make the communication settings by operating the Smart Loader Package (SLP-D50/SLP-H21)of the temperature controller.

Item	Set value
Transmission speed*1	9600bps, 19200bps, 38400bps, 57600bps
Communication mode*2	0: MODBUS 1: CPL
Data bit	8bits (fixed)
Parity bit	Even (fixed)
Stop bit	1bit (fixed)
Station address*3	1 to 15*4

*1 Adjust the settings with GOT settings.
*2 Set this item to 1: CPL.
*3 Select the station address without overlapping with that of other units.
*4 The station address for AHC2001 ranges from 1 to 127. However, use station address from 1 to 15, which are the range for DMC50.

3.5.18 Connecting to AHC2001 SCU

■1. Communication settings

Make the communication settings by operating the Smart Loader Package (SLP-D50/SLP-H21)of the temperature controller.

Item	Set value
Transmission speed*1	9600bps, 19200bps, 38400bps
Data bit*1	7bits, 8bits
Parity bit*1	0: None, 1:Even, 2: Odd
Stop bit*1	1bit, 2bits
Half duplex/Full duplex*2	0: Half duplex, 1: Full duplex
Space sending	0 (fixed)
Protocol setup*3	1 to 30

*1 Adjust the settings with GOT settings.
*2 Set this item to 0: Half duplex.
*3 Set this item to 2: CPL.

3.5.19 Station number setting

Set each station number so that no station number overlaps.
The station number can be set without regard to the cable connection order. There is no problem even if station numbers are not consecutive.

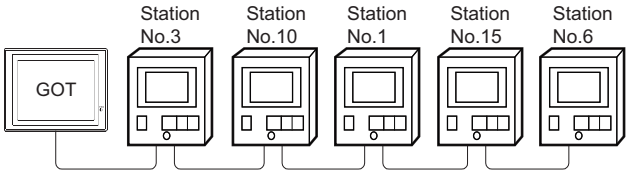

Examples of station number setting

■1. Direct specification

When setting the device, specify the station number of the control equipment of which data is to be changed.

Model name	Specification range
SDC40A/40B/40G, SDC15, SDC25/26, SDC35/36, SDC20/21, SDC30/31 CML, CMF050, MQV, MPC	1 to 127
PBC201-VN2	1 to 126
SDC45/46	1 to 120
CMS, CMF015, CMC10B	1 to 99
RX	1 to 32
DMC10, DMC50, MVF, AUR350C, AUR450C, AHC2001*1	1 to 15

*1 The station number for AHC2001 ranges from 1 to 127. However, use station numbers from 1 to 15, which are the range for DMC50.

■2. Indirect specification

When setting the device, indirectly specify the station number of the inverter of which data is to be changed using the 16-bit GOT internal data register (GD10 to GD25).
When specifying the station No. from the following table on GT Designer3, the value of GD10 to GD25 compatible to the station No. specification will be the station No. of the control equipment.

Specification station No.		Compatible device	Setting range
DMC50 AHC2001	Other than DMC50		
100	200	GD10	1 to 127:For SDC40A/40B/40G, SDC15, SDC25/26, SDC35/36, SDC20/21, SDC30/31, CML, CMF050, MQV, MPC 1 to 126: PBC201-VN2 1 to 120: SDC45/46 1 to 99: CMS, CMF015, CMC10B 1 to 32: RX 1 to 15: DMC10, DMC50, MVF, AUR350C, AUR450C, AHC2001*1 For the setting other than the above, error (dedicated device is out of range) will occur.
101	201	GD11	
102	202	GD12	
103	203	GD13	
104	204	GD14	
105	205	GD15	
106	206	GD16	
107	207	GD17	
108	208	GD18	
109	209	GD19	
110	210	GD20	
111	211	GD21	
112	212	GD22	
113	213	GD23	
114	214	GD24	
115	215	GD25	

*1 The station number for AHC2001 ranges from 1 to 127. However, use station numbers from 1 to 15, which are the range for DMC50.

3.6 Device Range that Can Be Set

The device ranges of controller that can be used for GOT are as follows.
Note that the device ranges in the following tables are the maximum values that can be set in GT Designer3.
The device specifications of controllers may differ depending on the models, even though belonging to the same series.
Please make the setting according to the specifications of the controller actually used.
When a non-existent device or a device number outside the range is set, other objects with correct device settings may not be monitored.

■1. Setting item

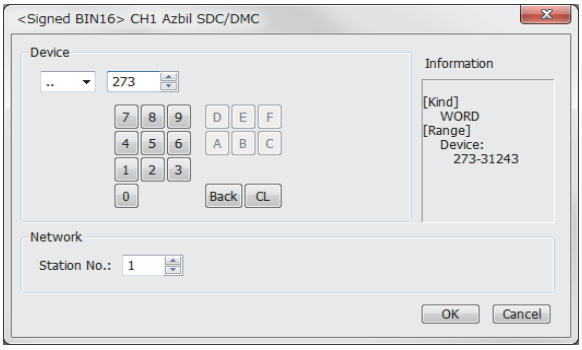

For Azbil SDC/DMC Series

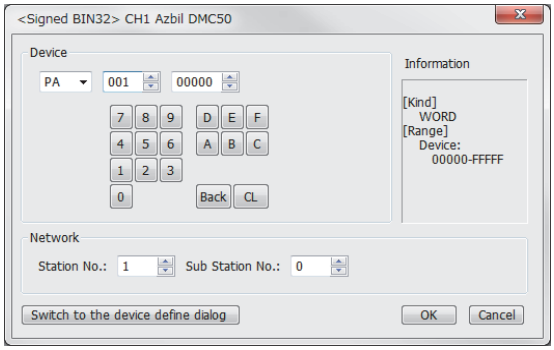

For Azbil DMC50

Item	Description	
Device	Set the device name, device number, and bit number. The bit number can be set only when specifying the bit of word device.	
Information	Displays the device type and setting range which are selected in [Device].	
Network	Set the monitor target of the set device.	
	Station	To monitor the control equipment of the specified station No. • When Azbil SDC/DMC Series is used. 0 to 127 :To monitor the control equipment of the specified station No. 200 to 215 :To specify the station No. of the control equipment to be monitored by the value of GOT data register (GD).*1 • When Azbil DMC50 is used. 1 to 15: To specify the station No. of the COM module or control equipment to be monitored. 100 to 115: To specify the station No. of the COM module or control equipment to be monitored, and the Sub Station of the control equipment by the value of GOT data register (GD).*2
	Sub Station	Specify the sub station number of the control equipment connected to the COM module specified in [Station] to monitor it. (0 to 15)If the specified [SubStation] is 0, the COM module/control equipment specified in [Station] is monitored. For AHC2001, the sub station number is ignored.
Switch to the device define dialog	Device definition can be checked.	

*1 The following shows the relation between station numbers of the control equipment and the GOT data register.

Station No.	GOT data register (GD)	Setting range
200	GD10	0 to 127 (If setting a value outside the range above, a device range error occurs.)
201	GD11	
:	:	
214	GD24	
215	GD25	

*2 From the value of GD10 to 25, the upper 8bits are set for station No., and the lower 8bits for the Sub Station.
In this case, the setting of [Sub Station] is invalid.
The following shows the relation between station numbers of the control equipment and the GOT data register.

Station No.	GOT data register (GD)	Setting range
100	GD10	0x0000 to 0xFFFF
101	GD11	
:	:	
114	GD24	
115	GD25	

Example:When [Station No.] is set to 100
When [Station No.] is set to 100, the monitoring target is set based on the GD10 value.
GD10 = 0x010A
(Upper 8bits) 0x01 → Station No.: 1
(Lower 8bits) 0x0A → Sub Station: 10

POINT

Station No. and Sub Station of AZBIL DMC50

The station No. and Sub Station set when using AZBIL DMC50 correspond to NW No. and Station number of MITSUBISHI PLC, respectively.

3.6.1 AZBIL SDC/DMC Series

Device name		Setting range	Device No. representation
Bit device	The bit specification of the word device	Setting range of each word device	—
Word device	Data (..)*1	..273 to ..31243	Decimal

*1 Only 16-bit (1-word) designation is allowed.

3.6.2 AZBIL DMC50/AHC2001

Device name		Setting range	Device No. representation
Double word device	Network Addresses (NA)*1	0000 to FFFF	Hexadecimal
	Parameter Addresses (PA)*1	00000 to FFFFF	Hexadecimal

*1 Only 32-bit (2-word) designation is allowed.

■1. Network Addresses (NA)

The following shows the network address settings and definitions.

Network Addresses	Definition
0000	Network Addresses

■2. Parameter Address (PA)

The following shows the parameter address settings and definitions.

Parameter Address	Definition
001	H/W Information
002	Date and Time Setup
021	AI Setup (High resolution type:standard inputs)
022	AI Setup (Special type)
023	AI Setup (High resolution type:option inputs)
041	AUX-IN Setup
045	AO Setup
061	DO Setup
071	TP Setup
0A1	MR20X Communication Setup
0A2	
0A3	Front Port Communication Setup
0C1	System Status
0C5	AI Alarm Log
0C3	Date and Time Display
0C4	System Alarm Log
0C6	AUX-IN Alarm Log
0E1	AI Status
0E2	AUX-IN Status
0E3	AO Status
0E5	DI Status
0E6	DO Status
0E7	TP Status
0E8	Zener Barrier Adjustment Counts
0F1	Present MR20X Communication Setup
0F2	
0F3	Front Port Active Communication Setup
103	Memory Usage Monitor
201	PID_A Options Control Action
202	PID_A Constants Proportional Band
203	PID_A Monitor SP
211	PID_CAS Options Control Action
212	PID_CAS Constants (master) Proportional Band
213	PID_CAS Constants (slave) Proportional Band
214	PID_CAS Monitor M_SP
234	Ra_PID Options Ra-PID Mode
235	Ra_PID Constants Proportional Band
236	Ra_PID Monitor SP
241	UP_PID Options Control Action
242	UP_PID Constants Proportional Band
243	UP_PID Monitor U_SP(Use SP)
301	TBL/TBR Setup Contact Point X1
C00	Pattern Setup
C01 to C63	Segment Setup
CF1	Pattern FB Monitor
801 to 9FF	Type label defined by the user

3.7 Precautions

■1. Station number setting of the temperature controller system

- When connecting to DMC10 or SDC
  Make sure to establish temperature controller system with No.1 station.
- When connecting to DMC50 or AHC2001
  A COM module or temperature controller with the station number set with the host address must be included.

➠ 3.4.2 Communication detail settings

■2. GOT clock control

Since the control equipment does not have a clock function, the settings of "time adjusting" or "time broad cast" by GOT clock control will be disabled.

■3. Disconnecting some of multiple connected equipment

The GOT can disconnect some of multiple connected equipment by setting GOT internal device. For example, the faulty station where a communication timeout error occurs can be disconnected from connected equipment.
For details of GOT internal device setting, refer to the following manual.

➠ GT Designer3 (GOT2000) Screen Design Manual

■4. When DMC50/AHC2001 and DMC10/SDC are mixed

GOT does not support connections with DMC50/AHC2001 and DMC10/SDC mixed.

■5. Station number range for AHC2001

The station number for AHC2001 ranges from 1 to 127. However, use station numbers from 1 to 15, which are the range for DMC50.

■6. Device range for AHC2001

The GOT only supports some devices for the AHC2001.
Use the devices within the device range for the DMC50.

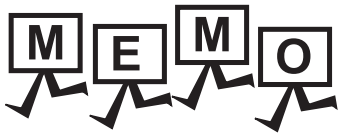
MEMO

4. CONNECTION TO OMRON PLC

4.1 Connectable Model List . . . . . 4 - 2
4.2 Serial Connection . . . . . 4 - 4
4.3 Ethernet Connection . . . . . 4 - 48
4.4 Device Range that Can Be Set. . . . . 4 - 58

4. CONNECTION TO OMRON PLC

4.1 Connectable Model List

The following table shows the connectable models.

Series	Model name	Clock	Communication Type	Connectable GOT	Refer to
SYSMAC CPM	CPM1	×	RS-232	GT27 GT25 GT23 GT21 GS	4.2.1
	CPM1A	×			
	CPM2A	○			
	CPM2C	○*3			
SYSMAC CQM1	CQM1*1	○*4	RS-232	GT27 GT25 GT23 GT21 GS	4.2.1
SYSMAC CQM1H	CQM1H	○*4*5	RS-232 RS-422	GT27 GT25 GT23 GT21 GS	4.2.2
SYSMAC CJ1	CJ1H	○	RS-232 RS-422	GT27 GT25 GT23 GT21 GS	4.2.3
	CJ1G				
	CJ1M				
SYSMAC CJ2	CJ2H	○	RS-232 RS-422	GT27 GT25 GT23 GT21 GS	4.2.3
	CJ2M*9				
SYSMAC CP1	CP1H	○	RS-232 RS-422	GT27 GT25 GT23 GT21 GS	4.2.4
	CP1L				
	CP1E (N type)*8				
SYSMAC C200HS	C200HS	○	RS-232 RS-422	GT27 GT25 GT23 GT21 GS	4.2.5
SYSMAC C200H	C200H	○*6			
SYSMAC α	C200HX	○	RS-232 RS-422	GT27 GT25 GT23 GT21 GS	4.2.5
	C200HG				
	C200HE*2	○*7			
SYSMAC CS1	CS1H	○	RS-232 RS-422	GT27 GT25 GT23 GT21 GS	4.2.6
	CS1G				
	CS1D				
SYSMAC C1000H	C1000H	×	RS-232 RS-422	GT27 GT25 GT23 GT21 GS	4.2.7
SYSMAC C2000H	C2000H				
SYSMAC CVM1/CV	CV500*10	○	RS-232 RS-422	GT27 GT25 GT23 GT21 GS	4.2.8
	CV1000*10				
	CV2000*10				
	CVM1*10	○*3			

*1 The CQM1-CPU11 is unable to communicate with GOT since the CQM1-CPU11 has no RS-232C interface.
*2 The C200HE-CPU11 does not support communication board.
Use a host Link unit.
*3 Some models do not have a clock function.
*4 The memory cassette equipped with a clock is required.
*5 The EM device of the CQM-CPU61 cannot be monitored.
*6 To use the C200H-CPU21/CPU22/CPU23, the memory cassette equipped with a clock is required.
The C200H-CPU01/CPU02/CPU03 does not support the clock function.
*7 The C200HE-CPU11 does not support the clock function.
*8 For CP1E (N type) CPU modules with 20 or less I/O points, only the direct CPU connection is available.
*9 The direct CPU connection is available for CJ2M-CPU1☐ only.
*10 Use the CPU module Ver. V1 or later.

Series	Model name	Clock	Communication Type	Connectable GOT	Refer to
SYSMAC CJ1	CJ1H	○	Ethernet	GT27 GT25 GT23 GT21 GS*1	➠ 4.3.1
	CJ1G				
	CJ1M				
SYSMAC CJ2	CJ2H				
	CJ2M				
SYSMAC CS1	CS1H				
	CS1G				
	CS1D				

*1 Not compatible with the redundant Ethernet.

4.2.1 System Configuration for connecting to CPM1, CPM1A, CPM2A, CPM2C or CQM1

■1. When connecting to PLC or RS-232C

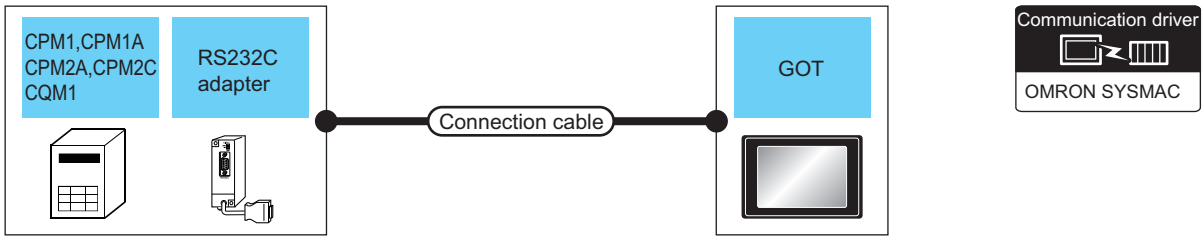

PLC			Connection cable		GOT		Number of connectable equipment
Model name	RS-232C adapter*1	Communication Type	Cable model Connection diagram number	Max. distance	Option device	Model	
CPM2A CQM1	-	RS-232	GT09-C30R20101-9P(3m) or User preparing RS-232 connection diagram 1)	15m	- (Built into GOT)	GT27 GT25 GT23 GT21(05Q) GS	1 GOT for 1 PLC
					GT15-RS2-9P	GT27 GT25	
					GT10-C02H-6PT9P*2	GT21(03P 04P R4) GT21(03P 04P R2)	
			User preparing RS-232 connection diagram 4)	15m	- (Built into GOT)	GT21(04R) GT21(03P 04P R2)	
CPM1 CPM1A CPM2A CPM2C	CPM1-CIF01	RS-232	GT09-C30R20101-9P(3m) or User preparing RS-232 connection diagram 1)	15m	- (Built into GOT)	GT27 GT25 GT23 GT21(05Q) GS	1 GOT for 1 RS-232C adapter
					GT15-RS2-9P	GT27 GT25	
					GT10-C02H-6PT9P*2	GT21(03P 04P R4) GT21(03P 04P R2)	
			User preparing RS-232 connection diagram 4)	15m	- (Built into GOT)	GT21(04R) GT21(03P 04P R2)	

PLC			Connection cable		GOT		Number of connectable equipment
Model name	RS-232C adapter*1	Communication Type	Cable model Connection diagram number	Max. distance	Option device	Model	
CPM2C	CPM2C-CIF01-V1	RS-232	GT09-C30R20101-9P(3m) or User preparing RS-232 connection diagram 1)	15m	- (Built into GOT)	GT27 GT25 GT23 GT21 GS	1 GOT for 1 RS-232C adapter
					GT15-RS2-9P	GT27 GT25	
					GT10-C02H-6PT9P*2	GT21 GT21	
			User preparing RS-232 connection diagram 4)	15m	- (Built into GOT)	GT21 GT21	

*1 Product manufactured by OMRON Corporation. For details on the product, contact OMRON Corporation.

*2 When a GT10-C02H-6PT9P unit of the sub version A or B is used, do not ground the case of the D-sub (9-pin) connector.

■2. When connecting to OMRON connection cable

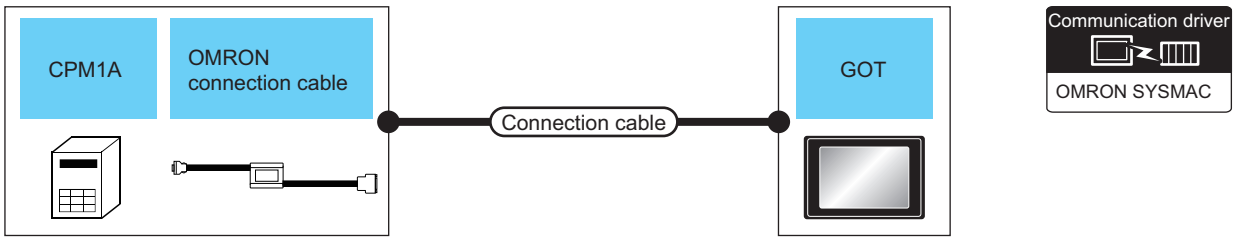

PLC			Connection cable		GOT		Number of connectable equipment
Model name	OMRON connection cable*1	Communication Type	Cable model Connection diagram number	Max. distance	Option device	Model	
CPM1A	CQM1-CIF01	RS-232	GT09-C30R20102-25S(3m) or User preparing RS-232 connection diagram 2)	15m	- (Built into GOT)	GT27 GT25 GT23 GT21(05Q) GS	1 GOT for 1 PLC
					GT15-RS2-9P	GT27 GT25	
					GT10-C02H-6PT9P*2	GT03P 21 104P R4 GT03P 21 104P R2	
			User preparing RS-232 connection diagram 5)	15m	- (Built into GOT)	GT04R 21 GT03P 21 104P R2	
CPM2C	CPM2C-CN111	RS-232	GT09-C30R20101-9P(3m) or User preparing RS-232 connection diagram 1)	15m	- (Built into GOT)	GT27 GT25 GT23 GT21(05Q) GS	1 GOT for 1 PLC
					GT15-RS2-9P	GT27 GT25	
					GT10-C02H-6PT9P*2	GT03P 21 104P R4 GT03P 21 104P R2	
			User preparing RS-232 connection diagram 4)	15m	- (Built into GOT)	GT04R 21 GT03P 21 104P R2	

*1 Product manufactured by OMRON Corporation. For details on the product, contact OMRON Corporation.

*2 When a GT10-C02H-6PT9P unit of the sub version A or B is used, do not ground the case of the D-sub (9-pin) connector.

4.2.2 System Configuration for connecting to CQM1H

■1. When connecting to PLC or serial communication board

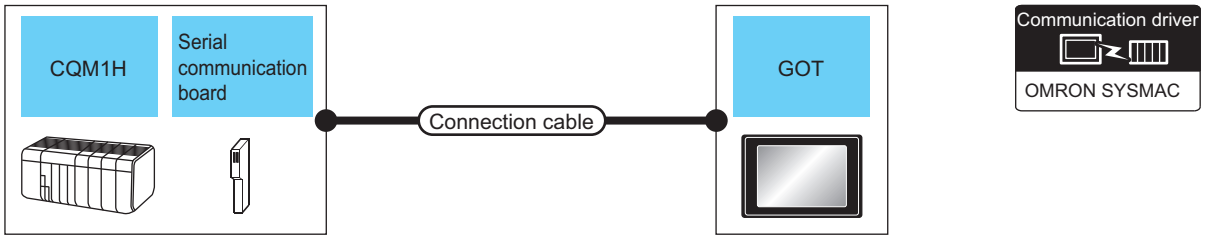

PLC			Connection cable		GOT		Number of connectable equipment
Model name	Serial communication board*1	Communication Type	Cable model Connection diagram number	Max. distance	Option device	Model	
CQM 1H	-	RS-232	GT09-C30R20101-9P(3m) or User preparing RS-232 connection diagram 1)	15m	- (Built into GOT)	GT27 GT25 GT23 GT21(050) GS	1 GOT for 1 PLC
					GT15-RS2-9P	GT27 GT25	
					GT10-C02H-6PT9P*2	GT2103P GT2104P R4 GT2103P GT2104P R2	
			User preparing RS-232 connection diagram 4)	15m	- (Built into GOT)	GT2104R GT2103P GT2104P R2	
	CQM1-SCB41	RS-232	GT09-C30R20101-9P(3m) or User preparing RS-232 connection diagram 1)	15m	- (Built into GOT)	GT27 GT25 GT23 GT21(050) GS	
					GT15-RS2-9P	GT27 GT25	
					GT10-C02H-6PT9P*2	GT2103P GT2104P R4 GT2103P GT2104P R2	
			User preparing RS-232 connection diagram 4)	15m	- (Built into GOT)	GT2104R GT2103P GT2104P R2	

PLC			Connection cable		GOT		Number of connectable equipment
Model name	Serial communication board*1	Communication Type	Cable model Connection diagram number	Max. distance	Option device	Model	
CQM 1H	CQM1-SCB41	RS-422	GT09-C30R40101-9P(3m) GT09-C100R40101-9P(10m) GT09-C200R40101-9P(20m) GT09-C300R40101-9P(30m) or User preparing RS-422 connection diagram 3)	200m	- (Built into GOT)	GT27 GT25 GT23 GT21(05Q) GS	1 GOT for 1 serial communication board
					GT15-RS4-9S	GT27 GT25	
					GT10-C02H-9SC	GT21(04R) GT21(03P 04P R4)	
			User preparing RS-422 connection diagram 7)	200m	- (Built into GOT)	GT21(04R) GT21(03P 04P ET/R4) GT21(03P 04P R4)	

*1 Product manufactured by OMRON Corporation. For details on the product, contact OMRON Corporation.

*2 When a GT10-C02H-6PT9P unit of the sub version A or B is used, do not ground the case of the D-sub (9-pin) connector.

■2. When connecting to OMRON connection cable

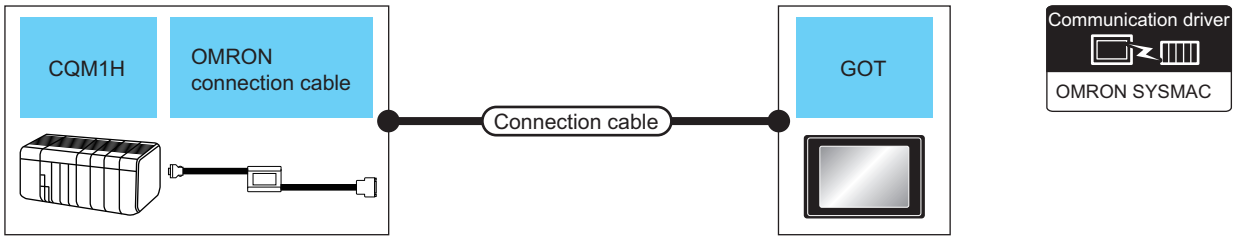

PLC			Connection cable		GOT		Number of connectable equipment
Model name	OMRON connection cable*1	Communication Type	Cable model Connection diagram number	Max. distance	Option device	Model	
CQM 1H	CQM1-CIF02	RS-232	GT09-C30R20101-9P(3m) or User preparing RS-232 connection diagram 1)	15m	- (Built into GOT)	GT27 GT25 GT23 GT21(05Q) GS	1 GOT for 1 PLC
					GT15-RS2-9P	GT27 GT25	
					GT10-C02H-6PT9P*2	GT21(03P 04P R4) GT21(03P 04P R2)	
			User preparing RS-232 connection diagram 4)	15m	- (Built into GOT)	GT21(04R) GT21(03P 04P R2)	

*1 Product manufactured by OMRON Corporation. For details on the product, contact OMRON Corporation.

*2 When a GT10-C02H-6PT9P unit of the sub version A or B is used, do not ground the case of the D-sub (9-pin) connector.

4.2.3 System Configuration for connecting to CJ1H, CJ1G, CJ1M, CJ2H, or CJ2M

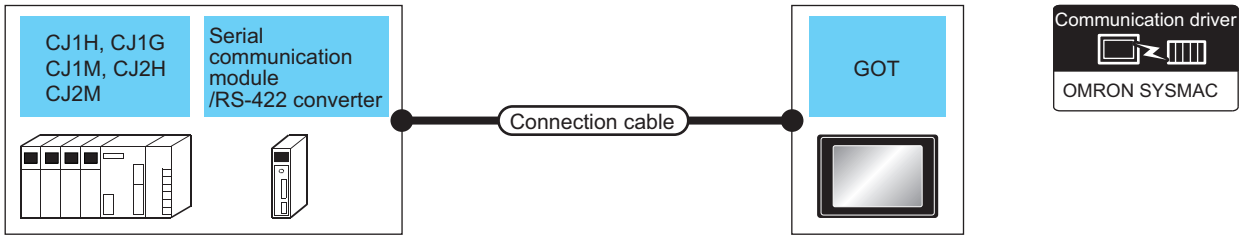

PLC			Connection cable		GOT		Number of connectable equipment
Model name	Serial communication module/RS-422A converter*1	Communication Type	Cable model Connection diagram number	Max. distance	Option device	Model	
CJ1H CJ1G CJ1M CJ2H	-	RS-232	GT09-C30R20101-9P(3m) or User preparing RS-232 connection diagram 1)	15m	- (Built into GOT)	GT27 GT25 GT23 GT21(05Q) GS	1 GOT for 1 PLC
					GT15-RS2-9P	GT27 GT25	
					GT10-C02H-6PT9P*2	GT21(03P 04P R4) GT21(03P 04P R2)	
			User preparing RS-232 connection diagram 4)	15m	- (Built into GOT)	GT21(04R) GT21(03P 04P R2)	
	CJ1W-SCU21-V1 CJ1W-SCU41-V1	RS-232	GT09-C30R20101-9P(3m) or User preparing RS-232 connection diagram 1)	15m	- (Built into GOT)	GT27 GT25 GT23 GT21(05Q) GS	
					GT15-RS2-9P	GT27 GT25	
					GT10-C02H-6PT9P*2	GT21(03P 04P R4) GT21(03P 04P R2)	
			User preparing RS-232 connection diagram 4)	15m	- (Built into GOT)	GT21(04R) GT21(03P 04P R2)	

PLC			Connection cable		GOT		Number of connectable equipment
Model name	Serial communication module/RS-422A converter*1	Communication Type	Cable model Connection diagram number	Max. distance	Option device	Model	
CJ1H CJ1G CJ1M CJ2H	CJ1W-SCU31-V1 CJ1W-SCU41-V1	RS-422	GT09-C30R40101-9P(3m) GT09-C100R40101-9P(10m) GT09-C200R40101-9P(20m) GT09-C300R40101-9P(30m) or User preparing RS-422 connection diagram 3)	200m	- (Built into GOT)	GT27 GT25 GT23 GT21 GS	1 GOT for 1 PLC
					GT15-RS4-9S	GT27 GT25	
					GT10-C02H-9SC	GT21 GT21 R4	
			User preparing RS-422 connection diagram 7)	200m	- (Built into GOT)	GT21 GT21 ET/R4 GT21 R4	
	CJ1W-CIF11	RS-422	GT09-C30R40103-5T(3m) GT09-C100R40103-5T(10m) GT09-C200R40103-5T(20m) GT09-C300R40103-5T(30m) or User preparing RS-422 connection diagram 4)	50m	- (Built into GOT)	GT27 GT25 GT23 GT21 GS	1 GOT for 1 RS-422A converter
					GT15-RS4-9S	GT27 GT25	
					GT10-C02H-9SC	GT21 GT21 R4	
			User preparing RS-422 connection diagram 8)	50m	- (Built into GOT)	GT21 GT21 ET/R4 GT21 R4	
CJ1H CJ1G CJ1M	CJ1W-SCU21 CJ1W-SCU41	RS-232	GT09-C30R20101-9P(3m) or User preparing RS-232 connection diagram 1)	15m	- (Built into GOT)	GT27 GT25 GT23 GT21 GS	1 GOT for each port of a serial communication module
					GT15-RS2-9P	GT27 GT25	
					GT10-C02H-6PT9P*2	GT21 GT21 R4 GT21 R2	
			User preparing RS-422 connection diagram 4)	15m	- (Built into GOT)	GT21 GT21 R2	

PLC			Connection cable		GOT		Number of connectable equipment
Model name	Serial communication module/RS-422A converter*1	Communication Type	Cable model Connection diagram number	Max. distance	Option device	Model	
CJ1H CJ1G CJ1M	CJ1W-SCU41	RS-422	GT09-C30R40101-9P(3m) GT09-C100R40101-9P(10m) GT09-C200R40101-9P(20m) GT09-C300R40101-9P(30m) or User preparing RS-422 connection diagram 3)	200m	- (Built into GOT)	GT27 GT25 GT23 GT21(05Q) GS	1 GOT for each port of a serial communication module
					GT15-RS4-9S	GT27 GT25	
					GT10-C02H-9SC	GT21(04R) GT21(03P04P R4)	
			User preparing RS-422 connection diagram 7)	200m	- (Built into GOT)	GT21(04R) GT21(03P04P ET/R4) GT21(03P04P R4)	
CJ2M-CPU1□	-	RS-232	GT09-C30R20101-9P(3m) or User preparing RS-232 connection diagram 1)	15m	- (Built into GOT)	GT27 GT25 GT23 GT21(05Q) GS	1 GOT for 1 PLC
					GT15-RS2-9P	GT27 GT25	
					GT10-C02H-6PT9P*2	GT21(03P04P R4) GT21(03P04P R2)	
			User preparing RS-232 connection diagram 4)	15m	- (Built into GOT)	GT21(04R) GT21(03P04P R2)	
	CJ1W-CIF11	RS-422	GT09-C30R40103-5T(3m) GT09-C100R40103-5T(10m) GT09-C200R40103-5T(20m) GT09-C300R40103-5T(30m) or User preparing RS-422 connection diagram 4)	50m	- (Built into GOT)	GT27 GT25 GT23 GT21(05Q) GS	1 GOT for 1 RS-422A converter
					GT15-RS4-9S	GT27 GT25	
					GT10-C02H-9SC	GT21(04R) GT21(03P04P R4)	
			User preparing RS-422 connection diagram 8)	50m	- (Built into GOT)	GT21(04R) GT21(03P04P ET/R4) GT21(03P04P R4)	

PLC			Connection cable		GOT		Number of connectable equipment
Model name	Serial communication module/RS-422A converter*1	Communication Type	Cable model Connection diagram number	Max. distance	Option device	Model	
CJ2M-CPU1□ CJ2M-CPU3□	CJ1W-SCU21-V1 CJ1W-SCU41-V1	RS-232	GT09-C30R20101-9P(3m) or User preparing RS-232 connection diagram 1)	15m	- (Built into GOT)	GT27 GT25 GT23 GT21(05Q) GS	1 GOT for each port of a serial communication module
					GT15-RS2-9P	GT27 GT25	
					GT10-C02H-6PT9P*2	GT21(03P 04P R4) GT21(03P 04P R2)	
			User preparing RS-232 connection diagram 4)	15m	- (Built into GOT)	GT21(04R) GT21(03P 04P R2)	
CJ2M-CPU1□ CJ2M-CPU3□	CJ1W-SCU31-V1 CJ1W-SCU41-V1	RS-422	GT09-C30R40101-9P(3m) GT09-C100R40101-9P(10m) GT09-C200R40101-9P(20m) GT09-C300R40101-9P(30m) or User preparing RS-422 connection diagram 3)	200m	- (Built into GOT)	GT27 GT25 GT23 GT21(05Q) GS	1 GOT for each port of a serial communication module
					GT15-RS4-9S	GT27 GT25	
					GT10-C02H-9SC	GT21(04R) GT21(03P 04P R4)	
			User preparing RS-422 connection diagram 7)	200m	- (Built into GOT)	GT21(04R) GT21(03P 04P ET/R4) GT21(03P 04P R4)	
CJ2M-CPU3□	CP1W-CIF01	RS-232	GT09-C30R20101-9P(3m) or User preparing RS-232 connection diagram 1)	15m	- (Built into GOT)	GT27 GT25 GT23 GT21(05Q) GS	1 GOT for 1 RS-232C option board
					GT15-RS2-9P	GT27 GT25	
					GT10-C02H-6PT9P*2	GT21(03P 04P R4) GT21(03P 04P R2)	
			User preparing RS-232 connection diagram 4)	15m	- (Built into GOT)	GT21(04R) GT21(03P 04P R2)	

PLC			Connection cable		GOT		Number of connectable equipment
Model name	Serial communication module/RS-422A converter*1	Communication Type	Cable model Connection diagram number	Max. distance	Option device	Model	
CJ2M-CPU3□	CP1W-CIF11	RS-422	GT09-C30R40103-5T(3m) GT09-C100R40103-5T(10m) GT09-C200R40103-5T(20m) GT09-C300R40103-5T(30m) or User preparing RS-232 connection diagram 4)	50m	- (Built into GOT)	GT27 GT25 GT23 GT21 GS	1 GOT for 1 RS-422A/485 option board
					GT15-RS4-9S	GT27 GT25	
					GT10-C02H-9SC	GT21 GT03P GT04P R4	
			User preparing RS-422 connection diagram 8)	50m	- (Built into GOT)	GT21 GT03P GT04P ET/R4 GT03P GT04P R4	
CJ2M-CPU3□	CP1W-CIF12	RS-422	GT09-C30R40103-5T(3m) GT09-C100R40103-5T(10m) GT09-C200R40103-5T(20m) GT09-C300R40103-5T(30m) or User preparing RS-422 connection diagram 4)	200m	- (Built into GOT)	GT27 GT25 GT23 GT21 GS	1 GOT for 1 RS-422A/485 option board
					GT15-RS4-9S	GT27 GT25	
					GT10-C02H-9SC	GT21 GT03P GT04P R4	
			User preparing RS-422 connection diagram 8)	200m	- (Built into GOT)	GT21 GT03P GT04P ET/R4 GT03P GT04P R4	

*1 Product manufactured by OMRON Corporation. For details on the product, contact OMRON Corporation.

*2 When a GT10-C02H-6PT9P unit of the sub version A or B is used, do not ground the case of the D-sub (9-pin) connector.

4.2.4 System Configuration for connecting to CP1H, CP1L, or CP1E

■1. When connecting a PLC or option board

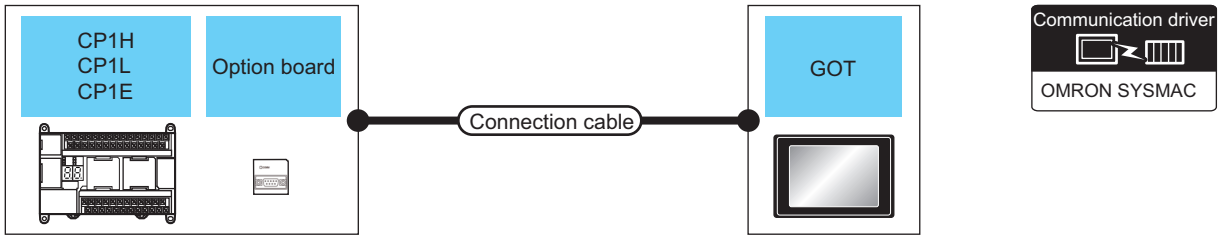

PLC			Connection cable		GOT		Number of connectable equipment
Model name	Option board*1	Communication Type	Cable model Connection diagram number	Max. distance	Option device	Model	
CP1E	-	RS-232	GT09-C30R20101-9P(3m) or User preparing RS-232 connection diagram 1)	15m	- (Built into GOT)	GT27 GT25 GT23 GT21(050) GS	1 GOT for 1 PLC
					GT15-RS2-9P	GT27 GT25	
					GT10-C02H-6PT9P*2	GT21(03P 04P R4) GT21(03P 04P R2)	
			User preparing RS-232 connection diagram 4)	15m	- (Built into GOT)	GT21(04R) GT21(03P 04P R2)	
CP1H CP1L CP1E	CP1W-CIF01	RS-232	GT09-C30R20101-9P(3m) or User preparing RS-232 connection diagram 1)	15m	- (Built into GOT)	GT27 GT25 GT23 GT21(050) GS	1 GOT for 1 RS-232C option board
					GT15-RS2-9P	GT27 GT25	
					GT10-C02H-6PT9P*2	GT21(03P 04P R4) GT21(03P 04P R2)	
			User preparing RS-232 connection diagram 4)	15m	- (Built into GOT)	GT21(04R) GT21(03P 04P R2)	

PLC			Connection cable		GOT		Number of connectable equipment
Model name	Option board*1	Communication Type	Cable model Connection diagram number	Max. distance	Option device	Model	
CP1H CP1L CP1E	CP1W-CIF11	RS-422	GT09-C30R40103-5T(3m) GT09-C100R40103-5T(10m) GT09-C200R40103-5T(20m GT09-C300R40103-5T(30m) or User preparing RS-422 connection diagram 4)	50m	- (Built into GOT)	GT27 GT25 GT23 GT21(05Q) GS	1 GOT for 1 RS-422A/485 option board
					GT15-RS4-9S	GT27 GT25	
					GT10-C02H-9SC	GT21(04R) GT21(03P 04P R4)	
			User preparing RS-422 connection diagram 8)	50m	- (Built into GOT)	GT21(04R) GT21(03P 04P ET/R4) GT21(03P 04P R4)	
	CP1W-CIF12	RS-422	GT09-C30R40103-5T(3m) GT09-C100R40103-5T(10m) GT09-C200R40103-5T(20m) GT09-C300R40103-5T(30m) or User preparing RS-422 connection diagram 4)	200m	- (Built into GOT)	GT27 GT25 GT23 GT21(05Q) GS	1 GOT for 1 RS-422A/485 option board
					GT15-RS4-9S	GT27 GT25	
					GT10-C02H-9SC	GT21(04R) GT21(03P 04P R4)	
			User preparing RS-422 connection diagram 8)	200m	- (Built into GOT)	GT21(04R) GT21(03P 04P ET/R4) GT21(03P 04P R4)	

*1 Product manufactured by OMRON Corporation. For details on the product, contact OMRON Corporation.

*2 When a GT10-C02H-6PT9P unit of the sub version A or B is used, do not ground the case of the D-sub (9-pin) connector.

■2. When connecting to serial communication module

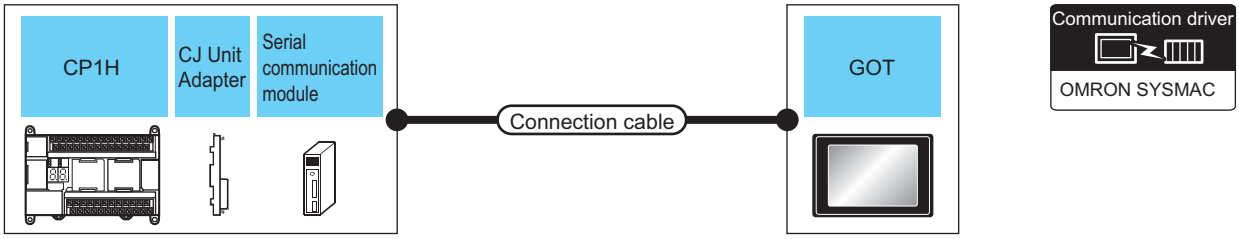

PLC				Connection cable		GOT		Number of connectable equipment
Model name	CJ unit adapter*1	Serial communication module*1	Communication Type	Cable model Connection diagram number	Max. distance	Option device	Model	
CP1H	CP1W-EXT01	CJ1W-SCU21 CJ1W-SCU41 CJ1W-SCU21-V1 CJ1W-SCU41-V1	RS-232	GT09-C30R20101-9P(3m) or User preparing RS-232 connection diagram 1)	15m	- (Built into GOT)	GT27 GT25 GT23 GT21(05Q) GS	1 GOT for each port of a serial communication module
						GT15-RS2-9P	GT27 GT25	
						GT10-C02H-6PT9P*2	GT21(03P 04P R4) GT21(03P 04P R2)	
				User preparing RS-232 connection diagram 4)	15m	- (Built into GOT)	GT21(04R) GT21(03P 04P R2)	
		CJ1W-SCU41 CJ1W-SCU31-V1 CJ1W-SCU41-V1	RS-422	GT09-C30R40101-9P(3m) GT09-C100R40101-9P(10m) GT09-C200R40101-9P(20m) GT09-C300R40101-9P(30m) or User preparing RS-422 connection diagram 3)	200m	- (Built into GOT)	GT27 GT25 GT23 GT21(05Q) GS	
						GT15-RS4-9S	GT27 GT25	
						GT10-C02H-9SC	GT21(04R) GT21(03P 04P R4)	
				User preparing RS-422 connection diagram 7)	200m	- (Built into GOT)	GT21(04R) GT21(03P 04P ET/R4) GT21(03P 04P R4)	

*1 Product manufactured by OMRON Corporation. For details on the product, contact OMRON Corporation.

*2 When a GT10-C02H-6PT9P unit of the sub version A or B is used, do not ground the case of the D-sub (9-pin) connector.

4.2.5 System Configuration for connecting to C200HS, C200H, C200HX, C200HG, or C200HE

■1. When connecting to PLC or rack type host link unit

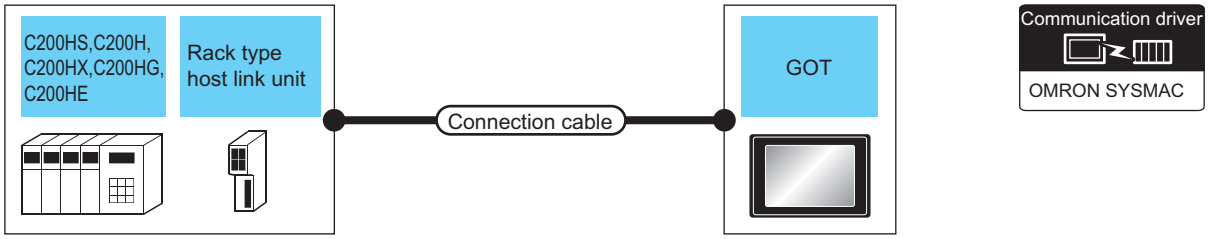

PLC			Connection cable		GOT		Number of connectable equipment
Model name	Rack type host link unit*1	Communication Type	Cable model Connection diagram number	Max. distance	Option device	Model	
C200HX C200HG C200HE	-	RS-232	GT09-C30R20101-9P(3m) or User preparing RS-232 connection diagram 1)	15m	- (Built into GOT)	GT27 GT25 GT23 GT21(05Q) GS	1 GOT for 1 PLC
					GT15-RS2-9P	GT27 GT25	
					GT10-C02H-6PT9P*2	GT21(03P 04P R4) GT21(03P 04P R2)	
			User preparing RS-232 connection diagram 4)	15m	- (Built into GOT)	GT21(04R) GT21(03P 04P R2)	
C200HS C200H C200HX C200HG C200HE	C200H-LK201-V1	RS-232	GT09-C30R20103-25P(3m) or User preparing RS-232 connection diagram 3)	15m	- (Built into GOT)	GT27 GT25 GT23 GT21(05Q) GS	1 GOT for 1 rack type host link unit
					GT15-RS2-9P	GT27 GT25	
					GT10-C02H-6PT9P*2	GT21(03P 04P R4) GT21(03P 04P R2)	
			User preparing RS-232 connection diagram 6)	15m	- (Built into GOT)	GT21(04R) GT21(03P 04P R2)	

PLC			Connection cable		GOT		Number of connectable equipment
Model name	Rack type host link unit*1	Communication Type	Cable model Connection diagram number	Max. distance	Option device	Model	
C200HS C200H C200HX C200HG C200HE	C200H-LK202-V1	RS-422	GT09-C30R40102-9P(3m) GT09-C100R40102-9P(10m) GT09-C200R40102-9P(20m) GT09-C300R40102-9P(30m) or User preparing RS-232 connection diagram 2)	200m	- (Built into GT)	GT27 GT25 GT23 GT21(05Q) GS	1 GOT for 1 rack type host link unit
					GT15-RS4-9S	GT27 GT25	
					GT10-C02H-9SC	GT21(04R) GT21(03P 04P R4)	
			User preparing RS-422 connection diagram 6)	200m	- (Built into GT)	GT21(04R) GT21(03P 04P ET/R4) GT21(03P 04P R4)	

*1 Product manufactured by OMRON Corporation. For details on the product, contact OMRON Corporation.

*2 When a GT10-C02H-6PT9P unit of the sub version A or B is used, do not ground the case of the D-sub (9-pin) connector.

■2. When connecting to a communication board

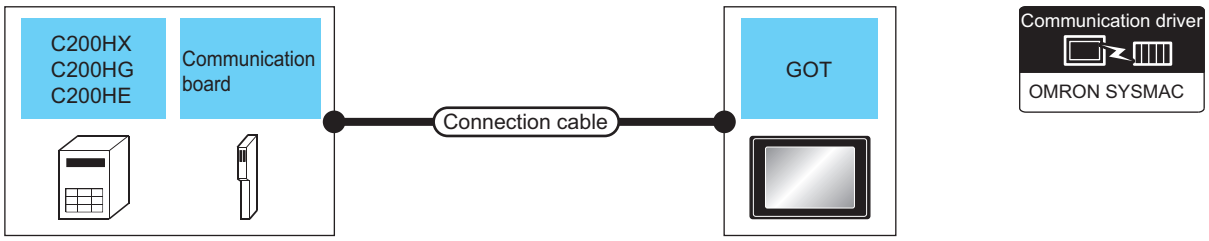

PLC			Connection cable		GOT		Number of connectable equipment
Model name	Communication board*1	Communication Type	Cable model Connection diagram number	Max. distance	Option device	Model	
C200HX C200HG C200HE*2	C200HW-COM02 C200HW-COM05 C200HW-COM06	RS-232	GT09-C30R20101-9P(3m) or User preparing RS-232 connection diagram 1)	15m	- (Built into GOT)	GT27 GT25 GT23 GT21(05Q) GS	1 GOT for each port of a communication board
					GT15-RS2-9P	GT27 GT25	
					GT10-C02H-6PT9P*3	GT2104P(03P) R4 GT2104P(03P) R2	
			User preparing RS-232 connection diagram 4)	15m	- (Built into GOT)	GT21(04R) GT2104P(03P) R2	
	C200HW-COM03 C200HW-COM06	RS-422	GT09-C30R40101-9P(3m) GT09-C100R40101-9P(10m) GT09-C200R40101-9P(20m) GT09-C300R40101-9P(30m) or User preparing RS-422 connection diagram 3)	200m	- (Built into GOT)	GT27 GT25 GT23 GT21(05Q) GS	
					GT15-RS4-9S	GT27 GT25	
					GT10-C02H-9SC	GT21(04R) GT2104P(03P) R4	
			User preparing RS-422 connection diagram 7)	200m	- (Built into GOT)	GT21(04R) GT2104P(03P) ET/R4 GT2104P(03P) R4	

*1 Product manufactured by OMRON Corporation. For details on the product, contact OMRON Corporation.
*2 The communication board cannot be mounted to the C2000HE-CPU11.
Use a host Link unit.
*3 When a GT10-C02H-6PT9P unit of the sub version A or B is used, do not ground the case of the D-sub (9-pin) connector.

4.2.6 System Configuration for connecting to CS1H, CS1G, or CS1D

■1. When connecting to a PLC or a serial communication module

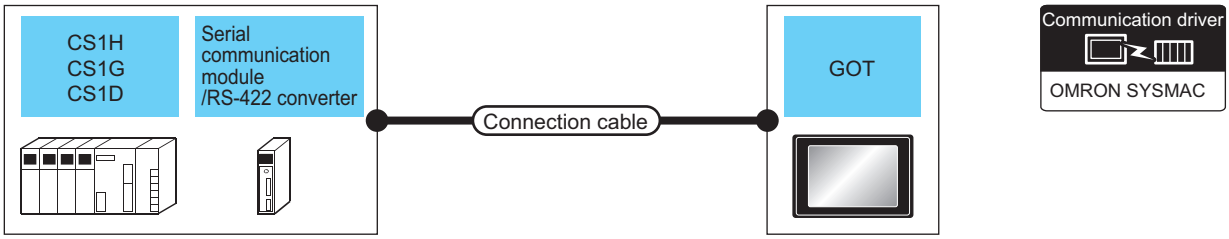

PLC			Connection cable		GOT		Number of connectable equipment
Model name	Serial communication module*1 /RS-422A converter	Communication Type	Cable model Connection diagram number	Max. distance	Option device	Model	
CS1H CS1G CS1D	-	RS-232	GT09-C30R20101-9P(3m) or User preparing RS-232 connection diagram 1)	15m	- (Built into GOT)	GT27 GT25 GT23 GT21(05Q) GS	1 GOT for 1 PLC
					GT15-RS2-9P	GT27 GT25	
					GT10-C02H-6PT9P*2	GT21(03P 04P R4) GT21(03P 04P R2)	
			User preparing RS-232 connection diagram 4)	15m	- (Built into GOT)	GT21(04R) GT21(03P 04P R2)	
	CS1W-SCU21 CS1W-SCU21-V1	RS-232	GT09-C30R20101-9P(3m) or User preparing RS-232 connection diagram 1)	15m	- (Built into GOT)	GT27 GT25 GT23 GT21(05Q) GS	1 GOT for 1 serial communication module
					GT15-RS2-9P	GT27 GT25	
					GT10-C02H-6PT9P*2	GT21(03P 04P R4) GT21(03P 04P R2)	
			User preparing RS-232 connection diagram 4)	15m	- (Built into GOT)	GT21(04R) GT21(03P 04P R2)	

PLC			Connection cable		GOT		Number of connectable equipment
Model name	Serial communication module*1 /RS-422A converter	Communication Type	Cable model Connection diagram number	Max. distance	Option device	Model	
CS1H CS1G CS1D	CJ1W-CIF11	RS-422	GT09-C30R40103-5T(3m) GT09-C100R40103-5T(10m) GT09-C200R40103-5T(20m) GT09-C300R40103-5T(30m) or User preparing RS-422 connection diagram 4)	50m	- (Built into GOT)	GT27 GT25 GT23 GT21 GS	1 GOT for 1 RS-422A converter
					GT15-RS4-9S	GT27 GT25	
					GT10-C02H-9SC	GT21 GT21	
			User preparing RS-422 connection diagram 8)	50m	- (Built into GOT)	GT21 GT21 GT21	

*1 Product manufactured by OMRON Corporation. For details on the product, contact OMRON Corporation.

*2 When a GT10-C02H-6PT9P unit of the sub version A or B is used, do not ground the case of the D-sub (9-pin) connector.

■2. When connecting to a serial communication board

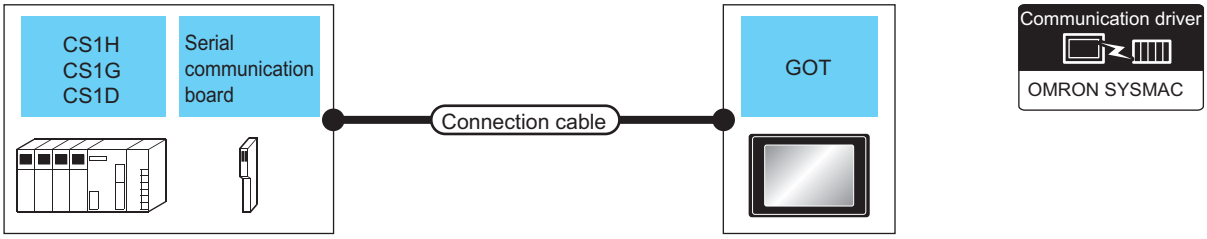

PLC			Connection cable		GOT		Number of connectable equipment
Model name	Serial communication board*1	Communication Type	Cable model Connection diagram number	Max. distance	Option device	Model	
CS1H CS1G CS1D	CS1W-SCB21 CS1W-SCB41 CS1W-SCB21-V1 CS1W-SCB41-V1	RS-232	GT09-C30R20101-9P(3m) or User preparing RS-232 connection diagram 1)	15m	- (Built into GOT)	GT27 GT25 GT23 GT21(05Q) GS	1 GOT for each port of a serial communication board
					GT15-RS2-9P	GT27 GT25	
					GT10-C02H-6PT9P*2	GT21(03P,04P R4) GT21(03P,04P R2)	
			User preparing RS-232 connection diagram 4)	15m	- (Built into GOT)	GT21(04R) GT21(03P,04P R2)	
	CS1W-SCB41 CS1W-SCB41-V1	RS-422	GT09-C30R40101-9P(3m) GT09-C100R40101-9P(10m) GT09-C200R40101-9P(20m) GT09-C300R40101-9P(30m) or User preparing RS-422 connection diagram 3)	200m	- (Built into GOT)	GT27 GT25 GT23 GT21(05Q) GS	
					GT15-RS4-9S	GT27 GT25	
					GT10-C02H-9SC	GT21(04R) GT21(03P,04P R4)	
			User preparing RS-422 connection diagram 7)	200m	- (Built into GOT)	GT21(04R) GT21(03P,04P ET/R4) GT21(03P,04P R4)	

*1 Product manufactured by OMRON Corporation. For details on the product, contact OMRON Corporation.
*2 When a GT10-C02H-6PT9P unit of the sub version A or B is used, do not ground the case of the D-sub (9-pin) connector.

4.2.7 System Configuration for connecting to C1000H or C2000H

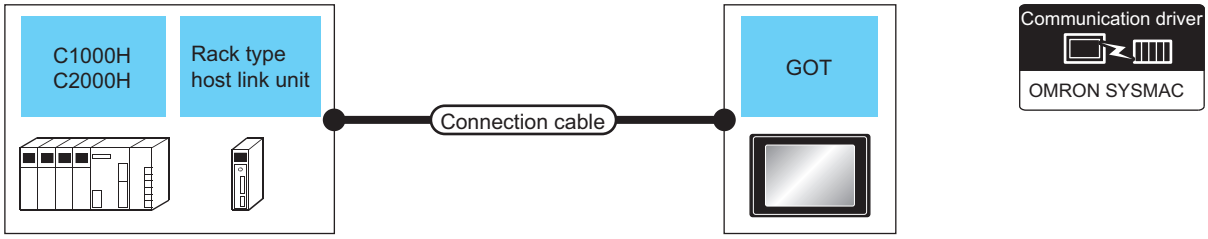

PLC			Connection cable		GOT		Number of connectable equipment
Model name	Rack type host link unit*1	Communication Type	Cable model Connection diagram number	Max. distance	Option device	Model	
C1000H C2000H	C500-LK201-V1	RS-232	GT09-C30R20103-25P(3m) or User preparing RS-232 connection diagram 3)	15m	- (Built into GOT)	GT27 GT25 GT23 GT21(050) GS	1 GOT for 1 rack type host link unit
					GT15-RS2-9P	GT27 GT25	
					GT10-C02H-6PT9P*2	GT21(03P 04P R4) GT21(03P 04P R2)	
			User preparing RS-232 connection diagram 6)	15m	- (Built into GOT)	GT21(04R) GT21(03P 04P R2)	
		RS-422	User preparing RS-422 connection diagram 2)	200m	- (Built into GOT)	GT27 GT25 GT23 GT21(050) GS	
					GT15-RS4-9S	GT27 GT25	
					GT10-C02H-9SC	GT21(04R) GT21(03P 04P R4)	
			User preparing RS-422 connection diagram 6)	200m	- (Built into GOT)	GT21(04R) GT21(03P 04P ETR4) GT21(03P 04P R4)	

*1 Product manufactured by OMRON Corporation. For details on the product, contact OMRON Corporation.
*2 When a GT10-C02H-6PT9P unit of the sub version A or B is used, do not ground the case of the D-sub (9-pin) connector.

4.2.8 System Configuration for connecting to CV500, CV1000, CV2000, or CVM1

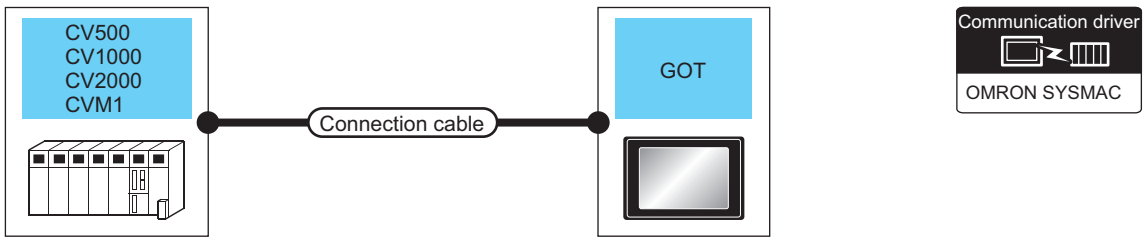

PLC		Connection cable		GOT		Number of connectable equipment
Model name	Communication Type	Cable model Connection diagram number	Max. distance	Option device	Model	
CV500 CV1000 CV2000 CVM1	RS-232	GT09-C30R20101-9P(3m) or User preparing RS-232 connection diagram 1)	15m	- (Built into GOT)	GT27 GT25 GT23 GT21(05Q) GS	1 GOT for 1 PLC
				GT15-RS2-9P	GT27 GT25	
				GT10-C02H-6PT9P*1	GT21(03P 04P R4) GT21(03P 04P R2)	
		User preparing RS-232 connection diagram 4)	15m	- (Built into GOT)	GT21(04R) GT21(03P 04P R2)	
	RS-422	GT09-C30R40101-9P(3m) GT09-C100R40101-9P(10m) GT09-C200R40101-9P(20m) GT09-C300R40101-9P(30m) or User preparing RS-422 connection diagram 1)	200m	- (Built into GOT)	GT27 GT25 GT23 GT21(05Q) GS	
				GT15-RS4-9S	GT27 GT25	
				GT10-C02H-9SC	GT21(04R) GT21(03P 04P R4)	
		User preparing RS-422 connection diagram 5)	200m	- (Built into GOT)	GT21(04R) GT21(03P 04P ET/R4) GT21(03P 04P R4)	

*1 When a GT10-C02H-6PT9P unit of the sub version A or B is used, do not ground the case of the D-sub (9-pin) connector.

4.2.9 Connection Diagram

The following diagram shows the connection between the GOT and the PLC.

■1. RS-232 cable

(1) Connection diagram

(a) RS-232 connection diagram 1)

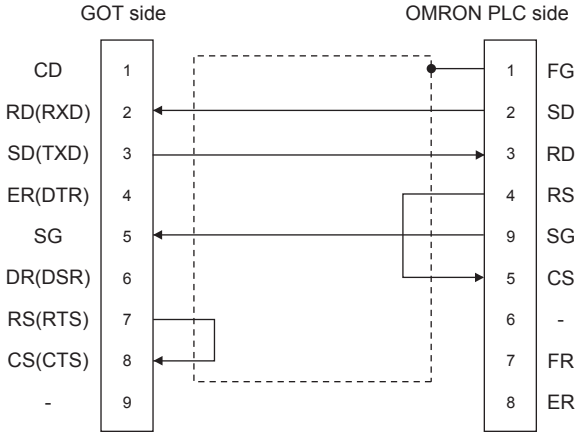

(b) RS-232 connection diagram 2)

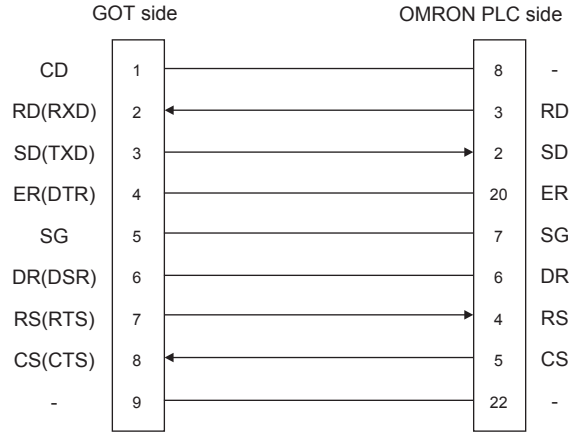

(c) RS-232 connection diagram 3)

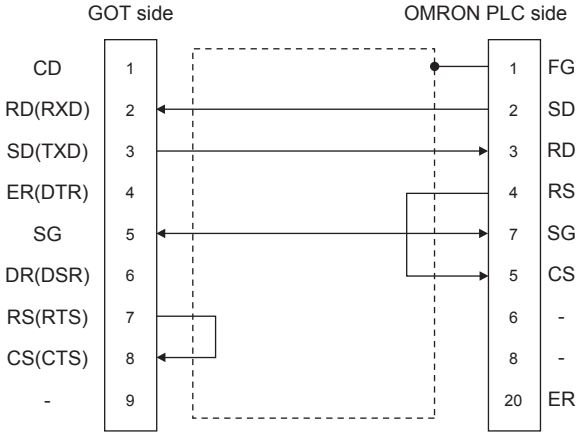

(d) RS-232 connection diagram 4)

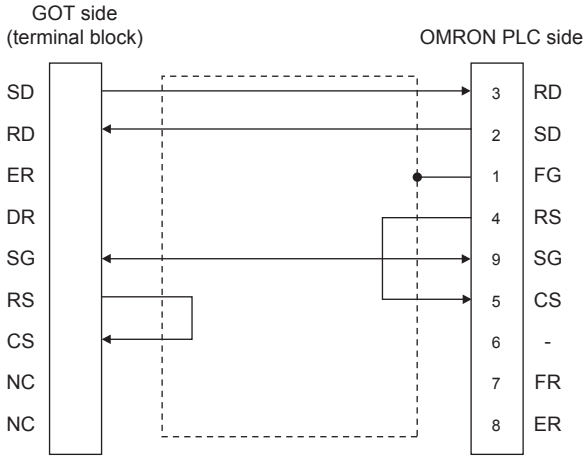

(e) RS-232 connection diagram 5)

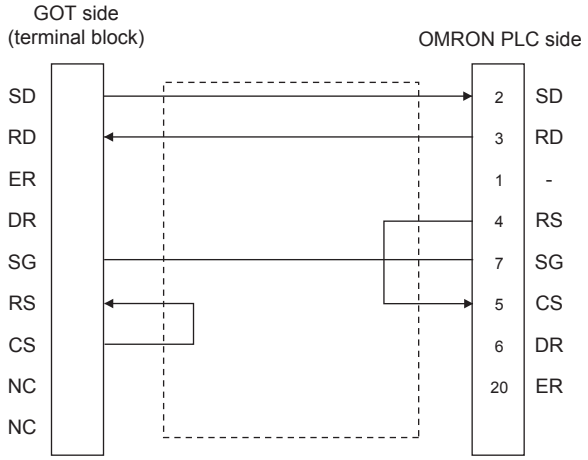

(f) RS-232 connection diagram 6)

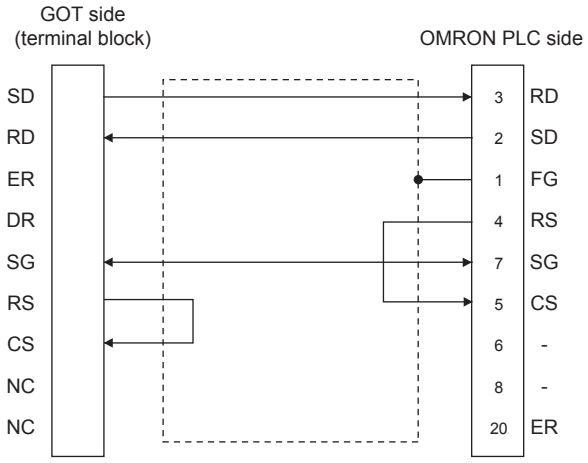

(2) Precautions when preparing a cable

(a) Cable length

The length of the RS-232 cable must be 15m or less.

(b) GOT side connector

For the GOT side connector, refer to the following.

➠ 1.4.1 GOT connector specifications

(c) OMRON PLC side connector

Use the connector compatible with the OMRON PLC.
For details, refer to the OMRON PLC user's manual.

■2. RS-422 cable

POINT

Differences in polarity between GOT and OMRON PLCs
The polarity of poles A and B in signal names is reversed between GOT and OMRON PLCs.
■ Connect a cable according to the following connection diagrams.

(1) Connection diagram

(a) RS-422 connection diagram 1)

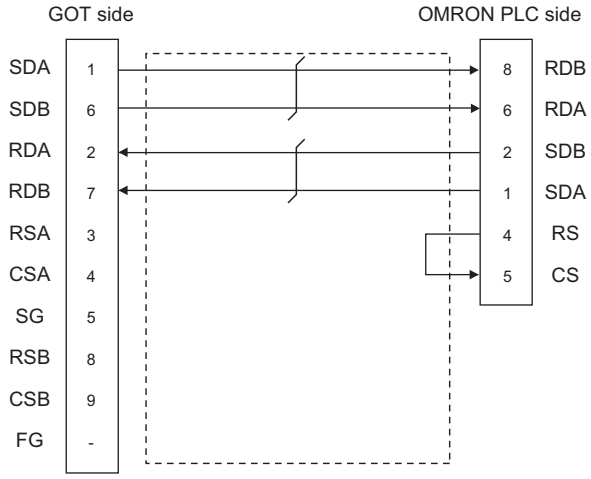

(b) RS-422 connection diagram 2)

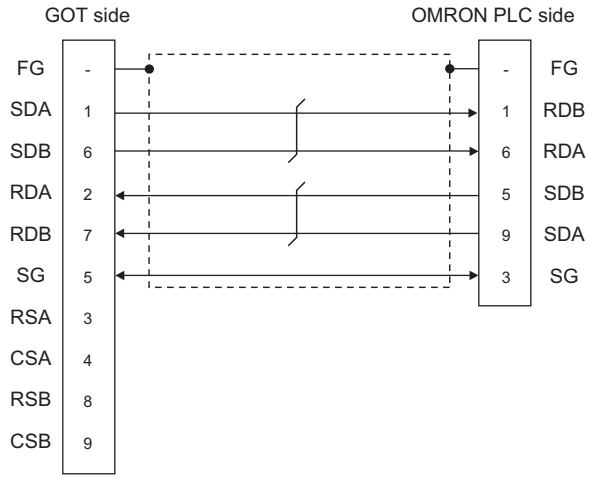

(c) RS-422 connection diagram 3)

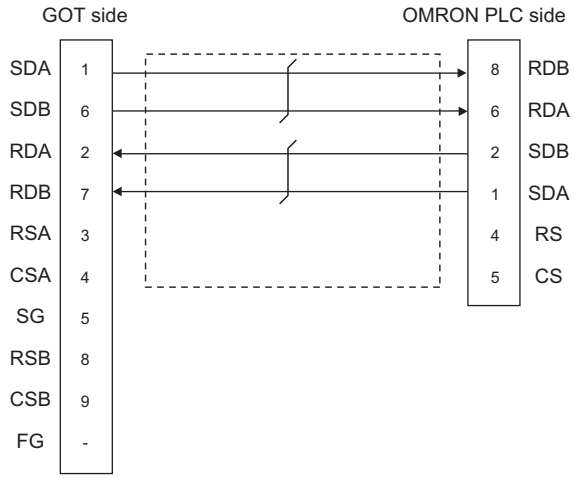

(d) RS-422 connection diagram 4)

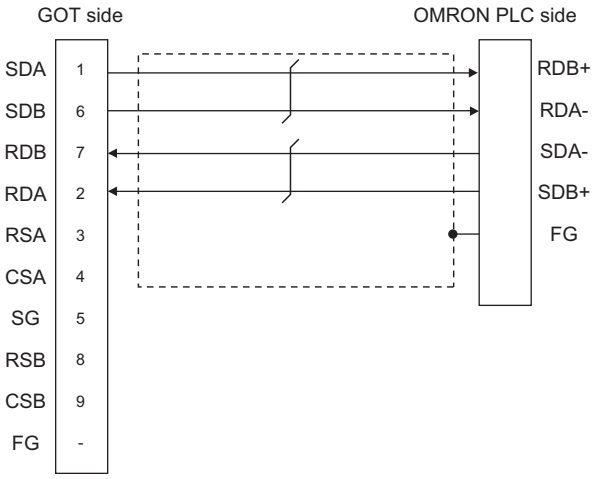

(e) RS-422 connection diagram 5)

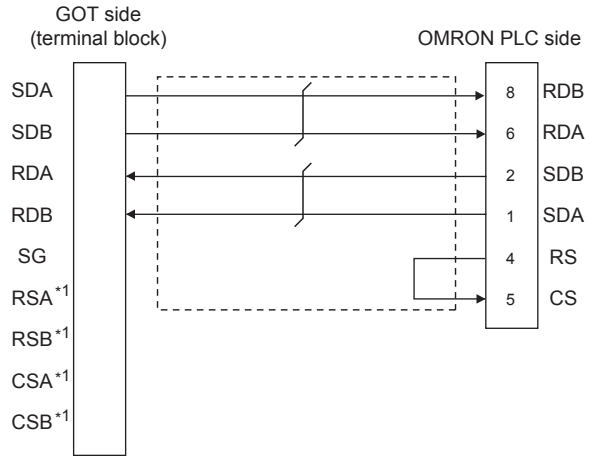

*1 The signals RSA, RSB, CSA, and CSB are not provided for GT21 03P 04P ET/R4.

(f) RS-422 connection diagram 6)

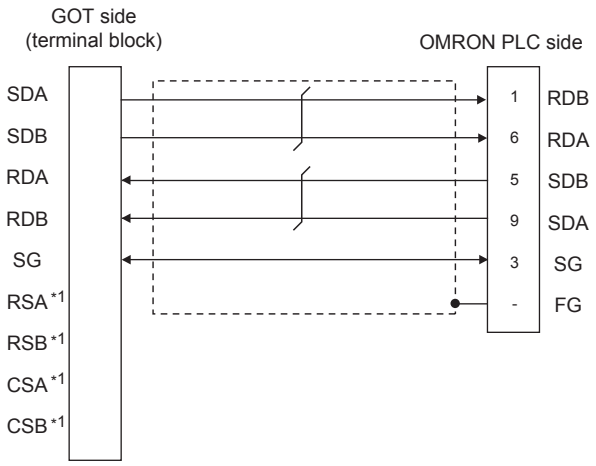

*1 The signals RSA, RSB, CSA, and CSB are not provided for GT21 03P 04P ET/R4.

(g) RS-422 connection diagram 7)

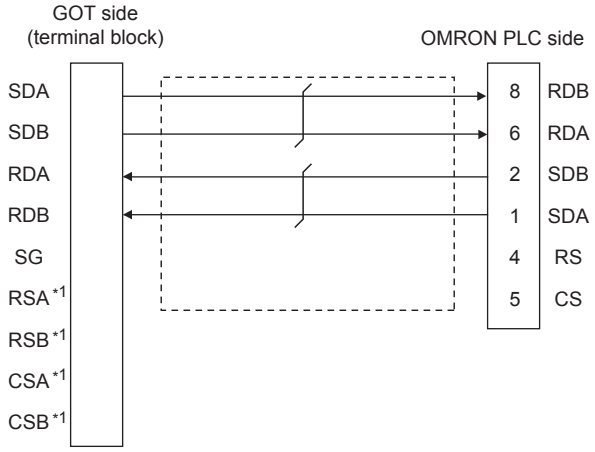

*1 The signals RSA, RSB, CSA, and CSB are not provided for GT21.

(h) RS-422 connection diagram 8)

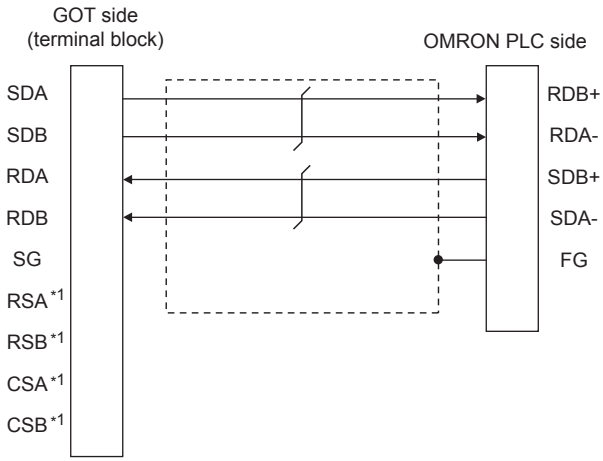

*1 The signals RSA, RSB, CSA, and CSB are not provided for GT21.

(2) Precautions when preparing a cable

(a) Cable length

The distance between the GOT and the PLC of connection diagram 1), 2) and 3) must be 200 m or less.
The length of the RS-422 connection diagram 4) must be 50m or less.

(b) GOT side connector

For the GOT side connector, refer to the following.

➠ 1.4.1 GOT connector specifications

(c) OMRON PLC side connector

Use the connector compatible with the OMRON PLC.
For details, refer to the OMRON PLC user's manual.

(3) Setting terminating resistors

(a) GOT side

- For GT27, GT25, GT23
  Set the terminating resistor setting switch of the GOT main unit to "Disable".
- For GT21
  Set the terminating resistor selector to "330Ω".
  For details of terminating resistor settings, refer to the following.

➠ 1.4.3 Terminating resistors of GOT

(b) OMRON PLC side

When connecting an OMRON PLC to a GOT, a terminating resistor must be set to the OMRON PLC.

➠ OMRON PLC user's Manual

4.2.10 GOT Side Settings

■1. Setting communication interface (Communication settings)

Set the channel of the equipment to be connected to the GOT.

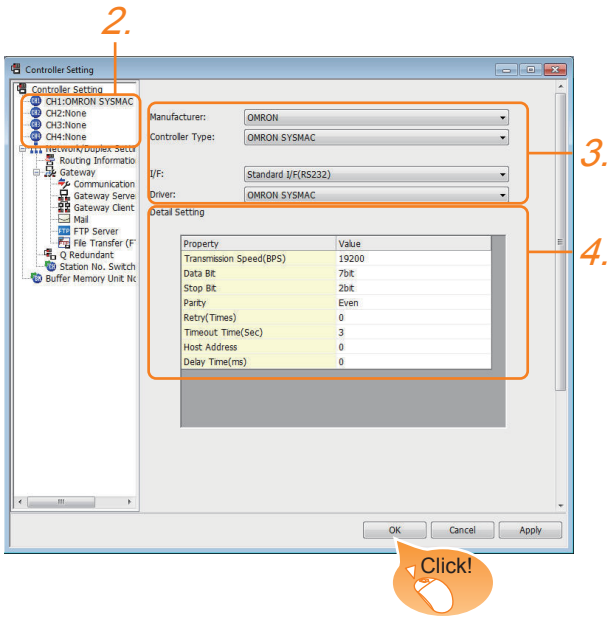

Step 1. Select [Common] → [Controller Setting] from the menu.

Step 2. The Controller Setting window is displayed. Select the channel to be used from the list menu.

Step 3. Set the following items.

- Manufacturer: OMRON
- Controller Type: Set the option according to the Controller Type to be connected.
  - OMRON SYSMAC
  - OMRON SYSMAC CS/CJ
- I/F: Interface to be used
- Driver: OMRON SYSMAC

Step 4. The detailed setting is displayed after Manufacturer, Controller Type, I/F, and Driver are set. Make the settings according to the usage environment.

➠ 4.2.10 ■2. Communication detail settings

Click the [OK] button when settings are completed.

POINT

The settings of connecting equipment can be confirmed in [I/F Communication Setting]. For details, refer to the following.

➠ 1.1.2 I/F communication setting

■2. Communication detail settings

Make the settings according to the usage environment.

Property	Value
Transmission Speed(BPS)	19200
Data Bit	7 bit
Stop Bit	2 bit
Parity	Even
Retry(Times)	0
Timeout Time(Sec)	3
Host Address	0
Delay Time(ms)	0

Item	Description	Range
Transmission Speed	Set this item when change the transmission speed used for communication with the connected equipment. (Default: 19200bps)	4800bps, 9600bps, 19200bps, 38400bps, 57600bps, 115200bps
Data Bit	Set this item when change the data length used for communication with the connected equipment. (Default: 7bits)	7bit (fixed)
Stop Bit	Specify the stop bit length for communications. (Default: 2bits)	2bit (fixed)
Parity	Specify whether or not to perform a parity check, and how it is performed during communication. (Default: Even)	Even (fixed)
Retry	Set the number of retries to be performed when a communication error occurs. (Default: 0time)	0 to 5times
Timeout Time	Set the time period for a communication to time out. (Default: 3sec)	1 to 30sec
Host Address	Specify the host address (station No. of the PLC to which the GOT is connected) in the network of the GOT. (Default: 0)	0 to 31
Delay Time	Set this item to adjust the transmission timing of the communication request from the GOT. (Default: 0ms)	0 to 300 (ms)

POINT

(1) Communication interface setting by the Utility

The communication interface setting can be changed on the Utility's [Communication Settings] after writing [Communication Settings] of project data.

For details on the Utility, refer to the following manual.

➠ GOT2000 Series User's Manual (Utility)

(2) Precedence in communication settings

When settings are made by GT Designer3 or the Utility, the latest setting is effective.

4.2.11 PLC Side Setting

POINT

OMRON PLC

For details of OMRON PLCs, refer to the following manuals.

➠ OMRON PLC user's Manual

Model name		Refer to
PLC CPU	CPM2A	4.2.12
	CQM1, CQM1H	
	CS1, CJ1, CJ2	4.2.13
	CP1H, CP1L, CP1E	4.2.13
	C200Hα	4.2.12
	CV500, CV1000, CV2000, CVM1	4.2.14
RS-232C adapter	CPM1-CIF01, CPM2C-CIF01-V1	4.2.12
Connection cable	CQM1-CIF01	4.2.15
	CQM1-CIF02	
	CPM2C-CN111	
Rack type host link unit	C200H-LK201-V1	4.2.16
	C200H-LK202-V1	4.2.16
	C500-LK201-V1	4.2.16
Serial communication module	CJ1W-SCU21	4.2.17
	CJ1W-SCU41	
	CJ1W-SCU21-V1	
	CJ1W-SCU31-V1	
	CJ1W-SCU41-V1	
	CS1W-SCU21	
	CS1W-SCU21-V1	
Communication board	C200HW-COM02	4.2.18
	C200HW-COM03	
	C200HW-COM05	
	C200HW-COM06	
Serial communication board	CQM1-SCB41	4.2.18
	CS1W-SCB21 CS1W-SCB21-V1	4.2.19
	CS1W-SCB41 CS1W-SCB41-V1	
RS-422A/485 Option board	CP1W-CIF11	4.2.20
	CP1W-CIF12	
RS-422A converter	CJ1W-CIF11	4.2.21

4.2.12 Connecting to CPM2A, CQM1, CQM1H, C200Hα or RS-232C adapter

■1. Device settings

Write the following set values to devices of each PLC CPU and initialize each port using a peripheral tool or DM monitor.

Device name	Set value
DM6645	0001H(fixed)
DM6646	b15 to b8 | b7 to b0 2) | 1) 1) RS-232C port transmission speed setting *1*2 02H: 4800bps 03H: 9600bps 04H: 19200bps 2) RS-232C port communication frame format 03H (fixed): The settings are: Start bit : 1 bit Data length: 7 bits Stop bit : 2 bits Parity : Even bits
DM6647	0000 (fixed)
DM6648*3	0000 to 0031
DM6649	0000 (fixed)

*1 Only transmission speeds available on the GOT side are shown.
*2 Set the same transmission speed of the RS-232C port as that of the GOT side.
*3 Set the RS-232C port host link station No. according to the Host Address on the GOT side.

POINT

Precautions for changing device values

Before changing the device values, make sure that the switch settings have been changed as follows:

CPM2A:

The communication condition switch to "individual"

Other PLC CPU:

Front panel DIP switch SW5 to "OFF"

4.2.13 Connecting to CJ1, CJ2, CS1, CP1H, CP1L, or CP1E

■1. Setting DIP switches

Set the DIP switches.

(1) Setting on the CJ1, CJ2

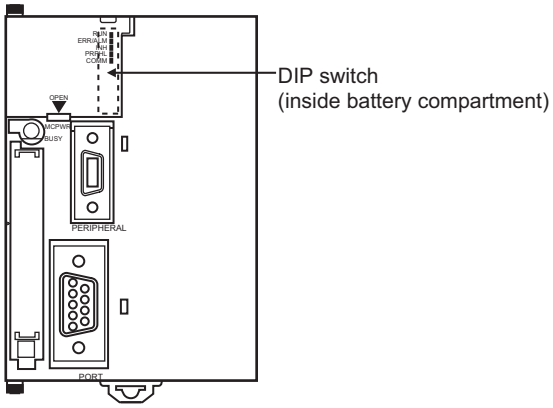

Switch		Description	Settings
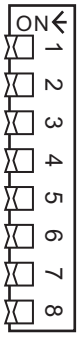	SW1	Enable/disable write to user memory (UM)	OFF
	SW2	Enable/disable automatic transfer of user program at power ON	OFF
	SW3	Free	OFF
	SW4	CJ1: Peripheral port communication condition CJ2: Free	OFF
	SW5	RS-232C communication condition	OFF
	SW6	User customized DIP switch	OFF
	SW7	Type specification for simplified backup	OFF
	SW8	-	OFF

(2) Setting on the CS1

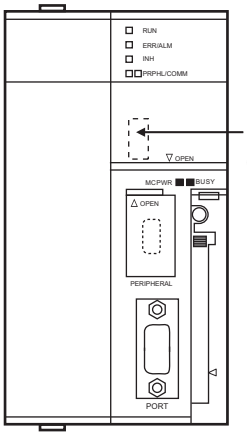

Switch		Description	Settings
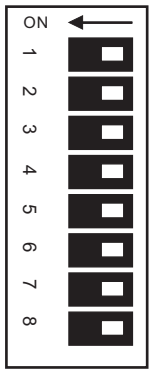	SW1	Enable/disable write to user memory (UM)	OFF
	SW2	Enable/disable automatic transfer of user program at power ON	OFF
	SW3	Programming console message display language (Japanese/English)	OFF
	SW4	Peripheral port communication condition	OFF
	SW5	RS-232C communication condition	OFF
	SW6	User customized DIP switch	OFF
	SW7	Type specification for simplified backup	OFF
	SW8	-	OFF

(3) Setting on the CP1H, CP1L

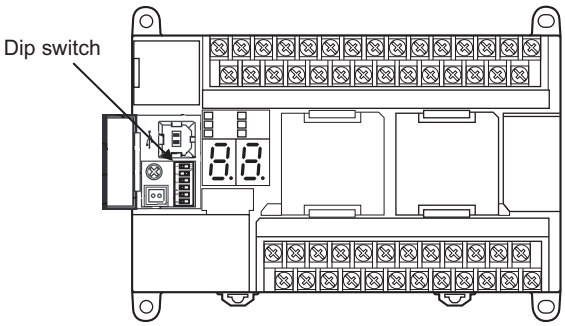

Switch		Description		Settings
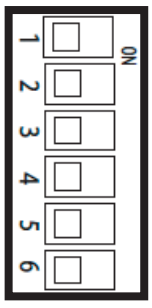	SW4	Option Board Slot1	According to PLC Setup.	OFF
	SW5	Option Board Slot2		OFF

(4) Setting on the CP1E

Settings by DIP switch are not required.

■2. Setting PLC system settings

(1) CJ1, CJ2, CS1

Make the PLC system settings.

Channel	Bit	Item	Set value
160	15	Arbitrary settings ON/OFF	1H: Arbitrary settings (fixed)
	8 to 11	Serial communication mode	0H: Upper link (fixed)
	3	Data bit	0H: 7bits (fixed)
	2	Stop bit	0H: 2bits (fixed)
	0 to 1	Parity	0H: Even (fixed)
161	0 to 7	Port transmission speed*1*2	00H: 9600bps 05H: 4800bps 06H: 9600bps 07H: 19200bps 08H: 38400bps 09H: 57600bps 0AH: 115200bps
163	0 to 7	Host link station No.*3	0H to 1FH : No.00 to 31

*1 Only transmission speeds available on the GOT side are shown.
*2 Set the same port transmission speed as that of the GOT side.
*3 Set the host link station No. according to the Host Address on the GOT side.

POINT

Precautions for changing the PLC system settings

Before changing the PLC system settings, make sure that the switch settings have been changed as follows:

CJ1, CJ2, CS1: Front panel DIP switch SW5 to "OFF"

(2) CP1H, CP1L, CP1E

Set the PLC system settings of the option slot connected to the GOT.

Item	Set value
Mode	Host link
Parameter	7, 2, E
Baud rate*1*2	4800bps,9600bps,19200bps, 38400bps,57600bps,115200bps
Unit number*3	00 to 31

*1 Only transmission speeds available on the GOT side are shown.
*2 Set the same port transmission speed as that of the GOT side.
*3 Set the host link station No. according to the Host Address on the GOT side.

POINT

Precautions for changing the PLC system settings

Before changing the PLC system settings, check the setting of the front DIP switch corresponding to the option slot used at the time of communication with GOT.

➠ (3) Setting on the CP1H, CP1L

4.2.14 Connecting to CV500/CV1000/CV2000 or CVM1

■1. Setting DIP switches

Set the DIP switches.

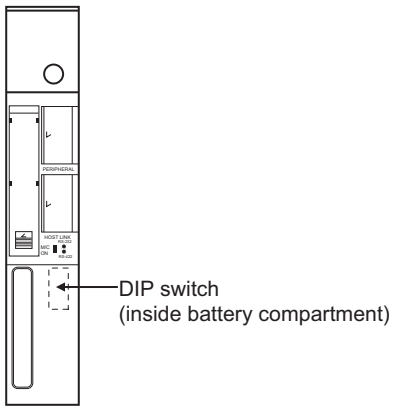

(1) Host link RS-422/232 switch

Settings	
For RS-232 communication	For RS-422 communication
RS-232 (up)	RS-422 (down)

(2) DIP switches

Switch No.	Settings	
	For RS-232 communication	For RS-422 communication
6	OFF (no terminating resistor)	ON (terminating resistor attached)
5	OFF	
4	OFF	
3	OFF	
2	OFF	
1	OFF	

■2. Setting PLC system settings

Make the PLC system settings.

Item	Set value
Transmission speed*1*2	4800bps/9600bps/19200bps
Stop bit	2 stop bits (fixed)
Parity	Even (fixed)
Data bit	7bits (fixed)
Unit number*3	00 to 31

*1 Only transmission speeds available on the GOT side are shown.
*2 Set the same transmission speed of the GOT.
*3 Set the station No. according to the Host Address on the GOT side.

4.2.15 Connecting to connection cable

■1. Device settings

Write the following set values to devices of each PLC CPU and initialize each port using a peripheral tool or DM monitor.

Device name	Set value
DM6650	0001H(fixed)
DM6651	b15 to b8 | b7 to b0 2) | 1) 1) RS-232C port transmission speed setting*1*2 02H: 4800bps 03H: 9600bps 04H: 19200bps 2) RS-232C port communication frame format 03H (fixed): The settings are: Start bit : 1 bit Data length: 7 bits Stop bit : 2 bits Parity : Even bits
DM6652	0000 (fixed)
DM6653*3	0000 to 0031

*1 Only transmission speeds available on the GOT side are shown.
*2 Set the same transmission speed of the peripheral port as that of the GOT side.
*3 Set the peripheral port host link station No. according to the Host Address on the GOT side.

POINT

Precautions for changing device values

Before changing the device values, make sure that the switch settings have been changed as follows:

CPM2A: The communication condition switch to "individual"

CPM2C: The communication port function switch to "OFF"

4.2.16 Connecting to rack type host link unit

■1. Switch setting on C200H-LK201-V1

Set the switches accordingly.

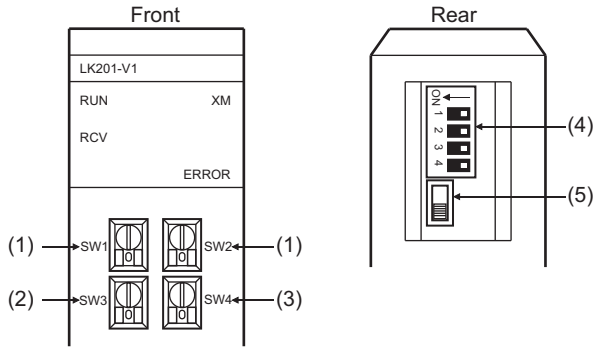

(1) Setting Machine No. (SW1, SW2)

Set the Machine No. within the range of 00 to 31.
Set the station No. according to the Host Address on the GOT side.

Rotary switch	Description	Settings
SW1	Machine No. upper digit ($\times 10^1$)	0 to 3
SW2	Machine No. lower digit ($\times 10^0$)	0 to 9

(2) Setting transmission speed (SW3)

Set the same transmission speed of the GOT.

Setting*1	Settings
4	4800bps
5	9600bps
6	19200bps

*1 Only transmission speeds available on the GOT side are shown.

(3) Setting command level/parity/transmission code (SW4)

Settings	Setting details		
	Command level	Parity	Transmission code
2 (fixed)	Levels 1, 2 and 3 enabled	Even	ASCII 7 bits 2 stop bits

(4) Setting DIP switches

Switch No.	Set value
1	OFF
2	OFF
3	ON (1:N procedure)
4	OFF (no 5V power supply)

(5) Setting the CTS switch

Settings
0V

■2. Switch setting on C200H-LK202-V1

Set the switches accordingly.

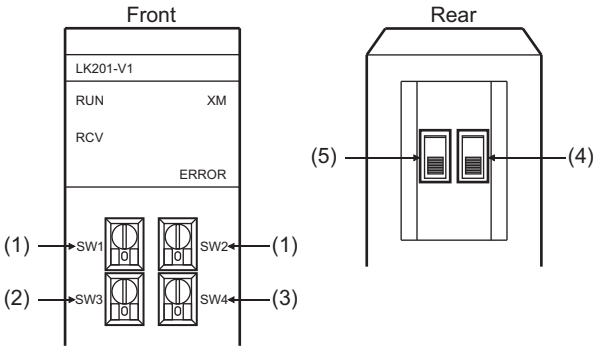

(1) Setting Machine No. (SW1, SW2)

Set the Machine No. within the range of 00 to 31.
Set the station No. according to the Host Address on the GOT side.

Rotary switch	Description	Settings
SW1	Machine No. upper digit ($\times 10^1$)	0 to 3
SW2	Machine No. lower digit ($\times 10^0$)	0 to 9

(2) Setting transmission speed (SW3)

Set the same transmission speed of the GOT.

Setting*1	Settings
4	4800bps
5	9600bps
6	19200bps

*1 Only transmission speeds available on the GOT side are shown.

(3) Setting command level/parity/transmission code (SW4)

Settings	Setting details		
	Command level	Parity	Transmission code
2 (fixed)	Levels 1, 2 and 3 enabled	Even	ASCII 7 bits 2 stop bits

(4) Setting the 1:1/1:N procedure switch

Settings
OFF (1:N procedure)

(5) Setting the terminating resistor connection switch

Settings
ON (terminating resistor attached)

■3. Switch setting on C500-LK201-V1

Set the switches accordingly.

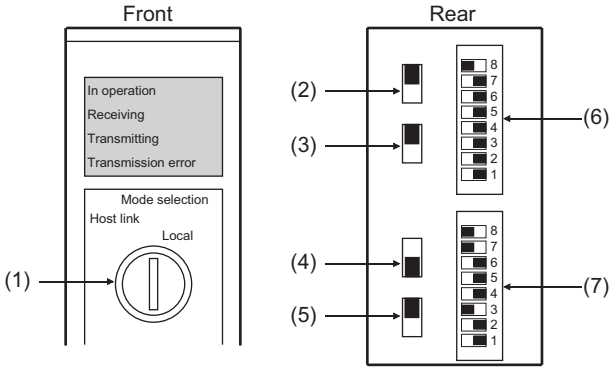

(1) Setting host link/local

Settings
Host link

(2) RS-232C/RS-422 switch

Settings	
For RS-232 communication	For RS-422 communication
RS-232 (down)	RS-422 (up)

(3) Internal/external clock switch

Settings
Internal (up)

(4) Terminating resistor connection switch

Settings
Attached (down)

(5) CTS switch

Settings
0V (up)

(6) Setting SW1 (Station No., Run/Stop)

Switch No.		Settings	Description
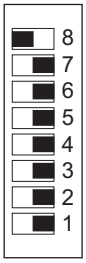	8	ON	Run
	7	OFF	-
	6	OFF	-
	5	Set the station No. within the range of 00 to 31. For details, refer to the following manual. ➡ OMRON PLC user's Manual	
	4		
	3		
	2		
	1		

(7) Setting SW2 (Transmission speed, Procedure, Level)

Switch No.		Settings	Description
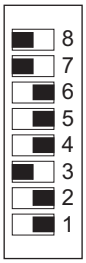	8	ON	Levels 1, 2 and 3 enabled
	7	ON	
	6	OFF	1:N procedure
	5	OFF	-
	4	*1	Transmission speed
	3		
	2		
	1		

*1 Only transmission speeds available on the GOT side are shown.

Transmission speed	Switch No.			
	SW1	SW2	SW3	SW4
4800bps	OFF	ON	ON	OFF
9600bps	ON	OFF	ON	OFF
19200bps	OFF	OFF	ON	OFF

4.2.17 Connecting to serial communication unit

■1. Device settings

Write the following set values to devices of each PLC CPU and initialize each port using a peripheral tool or DM monitor.

Device name		Set value
Port 1	Port 2	
DM (m)	DM (m+10)	8000H(fixed): The settings are: Port setting: Arbitrary setting Serial communication mode: Host link Start bit: 1bit Data bit: 7bits Stop bit: 2bits Parity: Even
DM (m+1)	DM (m+11)	b15 to b8 | b7 to b0 0H | 1) 1) Transmission speed*1*2 00H: 9600bps 08H: 38400bps 05H: 4800bps 09H: 57600bps 06H: 9600bps 0AH: 115200bps 07H: 19200bps
DM (m+2)	DM (m+12)	8000H(fixed)
DM (m+3) *3	DM (m+13) *3	8000H to 801FH

m = 30000 + (100 × unit No.)

*1 Only transmission speeds available on the GOT side are shown.
*2 Set the same transmission speed of the GOT.
*3 Set the host link station No. according to the Host Address on the GOT side.

4.2.18 Connecting to communication board, serial communication board (CQM1-SCB41)

■1. Device settings

Write the following set values to devices of each PLC CPU and initialize each port using a peripheral tool or DM monitor.

Device name		Set value
Port B	Port A	
DM6550	DM6555	0001H(fixed)
DM6551	DM6556	b15 to b8 | b7 to b0 2) | 1) 1) Transmission speed*1*2 02H:4800bps 03H:9600bps 04H:19200bps 2) Frame format setting 03H (fixed): The settings are: Start bit :1 bit Data length:7 bits Stop bit :2 bits Parity :Even bits
DM6552	DM6557	0000 (fixed)
DM6553*3	DM6558*3	0000 to 0031

*1 Only transmission speeds available on the GOT side are shown.
*2 Set the same transmission speed as that of the GOT side.
*3 Set the host link station No. according to the Host Address on the GOT side.

■2. Setting DIP switches (C200HW-COM3 and C200HW-COM6 only)

Set the DIP switches when performing the RS-422 communications on the C200HW-COM3 and C200HW-COM6.

C200HW-COM3

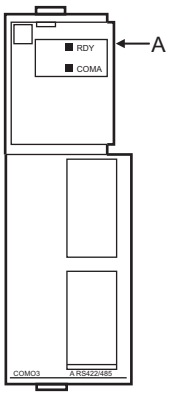

C200HW-COM6

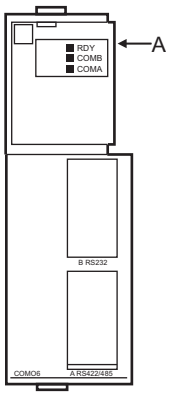

Side view indicated by A

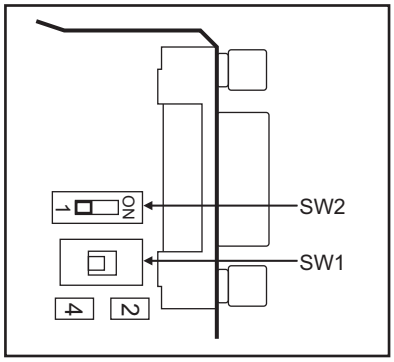

DIP switch		Set value
No.	Item	
SW1	RS-422/485 cable (2-wire/4-wire type) switching	4 (4-wire type)
SW2	Terminator ON/OFF	1 (no terminating resistor attached)

4.2.19 Connecting to serial communication board (CS1W-SCB21(-V1), CS1W-SCB41(-V1))

■1. Device settings

Write the following set values to devices of each PLC CPU and initialize each port using a peripheral tool or DM monitor.

Device name		Set value
Port 1	Port 2	
D32000	D32010	8000H(fixed): The settings are: Port setting: Arbitrary setting Serial communication mode: Host link Start bit: 1bit Data bit: 7bits Stop bit: 2bits Parity: Even
D32001	D32011	b15 to b8 / b7 to b0 0H / 1) 1) Transmission speed*1*2 00H: 9600bps 08H: 38400bps 05H: 4800bps 09H: 57600bps 06H: 9600bps 0AH: 115200bps 07H: 19200bps
D32002	D32012	8000H(fixed)
D32003*3	D32013*3	0000H to 0001FH

*1 Only transmission speeds available on the GOT side are shown.
*2 Set the same transmission speed of the GOT.
*3 Set the host link station No. according to the Host Address on the GOT side.

■2. Setting the DIP switches (CS1W-SCB41(-V1) only)

Set the DIP switches when performing the RS-422 communications on the CS1W-SCB41(-V1).

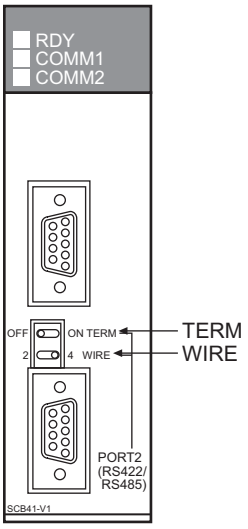

DIP switch		Set value
Name	Description	
WIRE	Setting(2-wire/4-wire) Switch	4 (4-wire type)
TERM	Terminator ON/OFF switch	OFF (no terminating resistor)

POINT

Precautions for changing the DM area

Before changing the DM area, make sure that the switch setting has been changed as follows.
CS1: Front panel DIP switch SW5 to "OFF"

4.2.20 Connecting to RS-422A/485 Option board

■1. Setting DIP switches

Set the DIP switches.

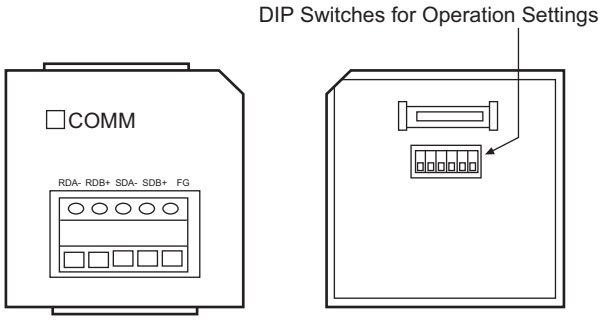

Switch No.		Settings	Description	
	1	ON	Enable	Terminating resistance selection
	2	OFF	4-wire type	2-wire or 4-wire selection
	3	OFF	4-wire type	2-wire or 4-wire selection
	5	ON	RS control enabled	RS control selection for RD
	6	ON	RS control enabled	RS control selection for SD

4.2.21 Connecting to RS-422A converter

■1. Setting DIP switches

Set the DIP switches.

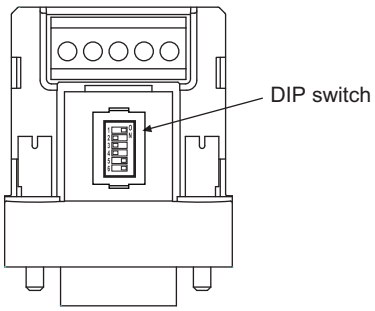

Switch No.		Settings	Description	
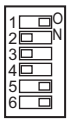	1	ON	Enable	Terminating resistance selection
	2	OFF	4-wire type	2-wire or 4-wire selection
	3	OFF	4-wire type	2-wire or 4-wire selection
	5	ON	RS control enabled	RS control selection for RD
	6	ON	RS control enabled	RS control selection for SD

4.3 Ethernet Connection

4.3.1 System configuration

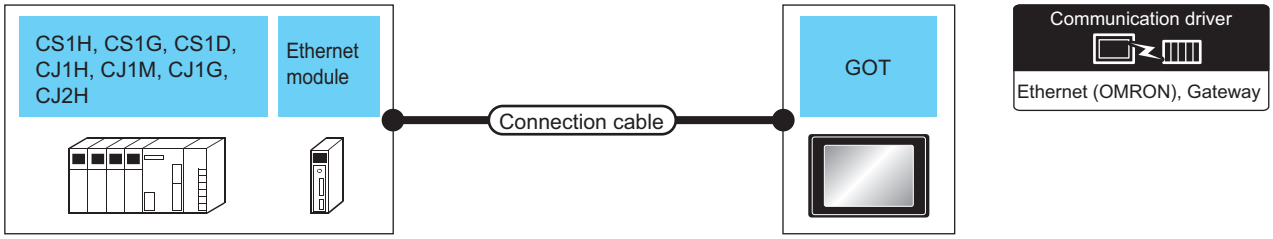

PLC		Connection cable		GOT		Number of connectable equipment
Series	Ethernet module[*3]	Cable model	Maximum segment length[*2]	Option device	Model	
CS1H CS1G CS1D	CS1W-ETN21 CS1W-EIP21	Twisted pair cable[*1] • 10BASE-T Shielded twisted pair cable (STP) or unshielded twisted pair cable (UTP): Category 3, 4, and 5 • 100BASE-TX Shielded twisted pair cable (STP): Category 5 and 5e	100m	- (Built into GOT)	GT27 GT25 GT23 GT21 GT2103P 2104P ET/R4 GS	When PLC:GOT is N:1 The following shows the number of PLCs for 1 GOT TCP: 128 or less UDP: 128 or less When PLC:GOT is 1:N The following shows the number of GOTs for 1 PLC TCP: 16 or less[*4] UDP: No limit number[*5]
				GT25-J71E71-100	GT27 GT25	
CS1D	CS1D-ETN21D		100m	- (Built into GOT)	GT27 GT25 GT23 GT21 GT2103P 2104P ET/R4 GS	
				GT25-J71E71-100	GT27 GT25	
CJ1H CJ1M CJ1G	CJ1W-ETN21 CS1W-EIP21		100m	- (Built into GOT)	GT27 GT25 GT23 GT21 GT2103P 2104P ET/R4 GS	
				GT25-J71E71-100	GT27 GT25	
CJ2H-CPU6□-EIP CJ2M-CPU3□	-		100m	- (Built into GOT)	GT27 GT25 GT23 GT21 GT2103P 2104P ET/R4 GS	
				GT25-J71E71-100	GT27 GT25	
	CJ1W-ETN21 CS1W-EIP21		100m	- (Built into GOT)	GT27 GT25 GT23 GT21 GT2103P 2104P ET/R4 GS	
				GT25-J71E71-100	GT27 GT25	

PLC		Connection cable		GOT		Number of connectable equipment
Series	Ethernet module*3	Cable model	Maximum segment length*2	Option device	Model	
CJ2H-CPU6□- CJ2M-CPU1□	CJ1W-ETN21 CS1W-EIP21	Twisted pair cable*1 • 10BASE-T Shielded twisted pair cable (STP) or unshielded twisted pair cable (UTP): Category 3, 4, and 5 • 100BASE-TX Shielded twisted pair cable (STP): Category 5 and 5e	100m	- (Built into GOT)	GT27 GT25 GT23 GT21 GT2103P GT2104P GT2104R GS	When PLC:GOT is N:1 The following shows the number of PLCs for 1 GOT TCP: 128 or less UDP: 128 or less When PLC:GOT is 1:N The following shows the number of GOTs for 1 PLC TCP: 16 or less*4 UDP: No limit number*5
				GT25-J71E71-100	GT27 GT25	

*1 The destination connected with the twisted pair cable varies with the configuration of the applicable Ethernet network system. Connect to the Ethernet module, hub, transceiver or other system equipment corresponding to the applicable Ethernet network system.

*2 A length between a hub and a node.
The maximum distance differs depending on the Ethernet device to be used.
The following shows the number of the connectable nodes when a repeater hub is used.
• 10BASE-T: Max. 4 nodes for a cascade connection (500m)
• 100BASE-TX: Max. 2 nodes for a cascade connection (205m)
When switching hubs are used, the cascade connection between the switching hubs has no logical limit for the number of cascades.
For the limit, contact the switching hub manufacturer.

*3 Product manufactured by OMRON Corporation. For details of the product, contact OMRON Corporation.

*4 If it is connected to devices other than the GOT using the connection, the number of connectable GOTs decreases.
For details, refer to the OMRON PLC user's manual.

*5 There is no restriction for the number of GOTs. However, if the number of GOTs increases, the communication becomes high-loaded, and it may affect the communication performance.

4.3.2 GOT side settings

■1. Setting communication interface (Communication settings)

Set the channel of the connected equipment.

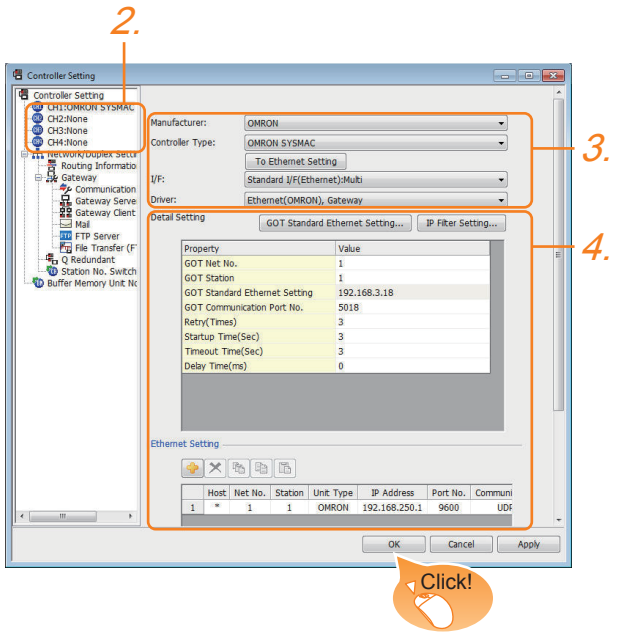

Step 1. Select [Common] → [Controller Setting] from the menu.

Step 2. The Controller Setting window is displayed. Select the channel to be used from the list menu.

Step 3. Set the following items.

- Manufacturer: OMRON
- Controller Type: OMRON SYSMAC
- I/F: Standard I/F (Ethernet): multi-channel connection
- Driver: Ethernet (OMRON), Gateway

Step 4. The detailed setting is displayed after Manufacturer, Controller Type, I/F, and Driver are set. Make the settings according to the usage environment.

➠ 4.3.2 ■2. Communication detail settings

Click the [OK] button when settings are completed.

POINT

The settings of connecting equipment can be confirmed in [I/F Communication Setting]. For details, refer to the following.

➠ 1.1.2 I/F communication setting

■2. Communication detail settings

Make the settings according to the usage environment.

Property	Value
GOT Net No.	1
GOT Station	1
GOT Standard Ethernet Setting	192.168.3.18
GOT Communication Port No.	5018
Retry(Times)	3
Startup Time(Sec)	3
Timeout Time(Sec)	3
Delay Time(ms)	0

Item	Description	Range
GOT Net No.	Set the network No. of the GOT. (Default: 1)	1 to 127
GOT Station*2	Set the station No. of the GOT. (Default: 1)	1 to 254
GOT Standard Ethernet Setting	Set the GOT IP address, subnet mask, default gateway, peripheral S/W communication port No., transparent port No.	➠ ■3. GOT Standard Ethernet setting
GOT Communication Port No.*1	Set the GOT port No. for the connection with the Ethernet module. (Default: 5018)	1024 to 5010, 5014 to 65534 (Except for 5011, 5012, 5013 and 49153 to 49170)
Retry	Set the number of retries to be performed when a communication timeout occurs. When receiving no response after retries, the communication times out. (Default: 3times)	0 to 5times
Startup Time	Specify the time period from the GOT startup until GOT starts the communication with the PLC CPU. (Default: 3sec)	3 to 255sec
Timeout Time	Set the time period for a communication to time out. (Default: 3sec)	1 to 90sec
Delay Time	Set the delay time for reducing the load of the network/ destination PLC. (Default: 0ms)	0 to 10000 (×10ms)

*1 By setting of the OMRON PLC, set the same [GOT Communication Port No.] setting as that of [FINS UDP Port] of CX-Programmer.

*2 Each of [GOT Station] set in the communication detail setting and [Station] set in the Ethernet setting must be set to different station numbers.

➠ ■4. Ethernet setting

■3. GOT Standard Ethernet setting

The GOT can be connected to a different network by using the following interface.

- Standard Ethernet interface:
  Set the [GOT IP Address] and [Subnet Mask] in the GOT built-in Ethernet interface.
- Extension Ethernet interface:
  Set the [GOT Extension IP Address] and [Extension Subnet Mask] in the Ethernet interface for the Ethernet communication module.
  BootOS Version Z or higher is required to use the extension Ethernet Interface.
  For details on writing the BootOS, refer to the following manual.

➠ GT Designer3 (GOT2000) Screen Design Manual

The standard Ethernet interface and extension Ethernet interface use the same [Default Gateway].

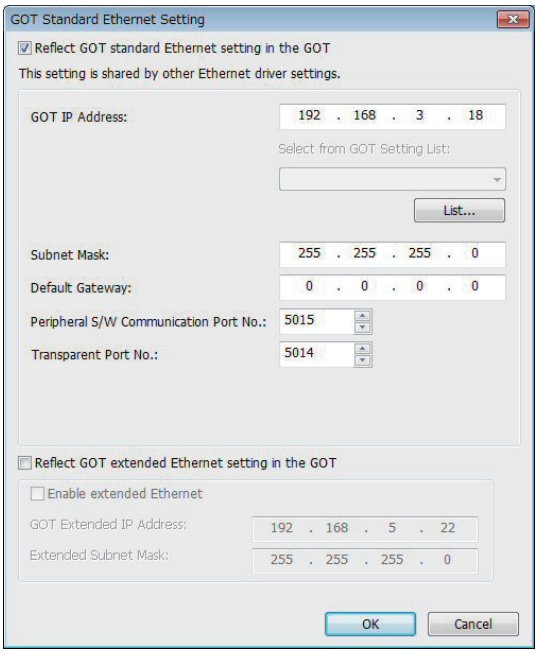

Item	Description	Range
The GOT standard Ethernet settings are applied on the GOT unit.	The standard Ethernet settings are applied on GOT.	-
GOT IP Address	Set the IP address of the Standard Ethernet interface. (Default: 192.168.3.18)	0.0.0.0 to 255.255.255.255
Select from GOT Setting List	Select the set GOT in the [GOT Setting List] dialog. ➠ GT Designer3(GOT2000) Help	-
Subnet Mask	Set the subnet mask for the sub network. (Only for connection via router) If the sub network is not used, the default value is set. (Default: 255.255.255.0)	0.0.0.0 to 255.255.255.255
Default Gateway	Set the router address of the default gateway where the GOT is connected. (Only for connection via router) (Default: 0.0.0.0)	0.0.0.0 to 255.255.255.255
Peripheral S/W Communication Port No.	Set the GOT port No. for the communication with the peripheral S/W. (Default: 5015)	1024 to 65534 (Except for 5011 to 5013, 49153 to 49170)
Transparent Port No.	Set the GOT port No. for the transparent function. (Default: 5014)	1024 to 65534(Except for 5011 to 5013,49153 to 49170)
The GOT extension Ethernet settings are applied on the GOT unit.	The extension Ethernet settings are applied on GOT.	-
Enabling the extension Ethernet	Enable the extension Ethernet settings.An error message will appear if all of the [Extension I/F Setting] in the [I/F communication setting] dialog are used. Always set on of the [Extension I/F Setting] to [Not used]. ➠ 1.1.2 I/F communication setting	-
GOT Extension IP Address	Set the IP address of the Extension Ethernet. (Default: 192.168.5.22)	0.0.0.0 to 255.255.255.255
Extension Subnet Mask	Set the subnet mask for the sub network. (Only for connection via router) If the sub network is not used, the default value is set. (Default: 255.255.255.0)	0.0.0.0 to 255.255.255.255

POINT

GOT IP address setting

For GOT IP address of each Ethernet setting, set a value that network system is different from each other.

(Example of setting)

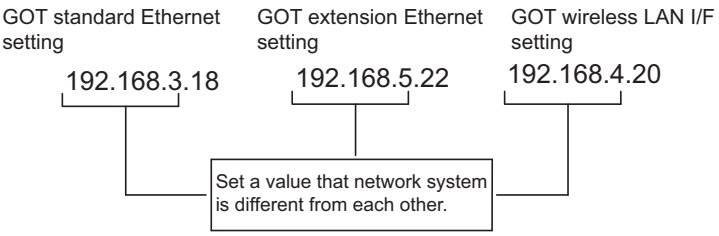

■4. Ethernet setting

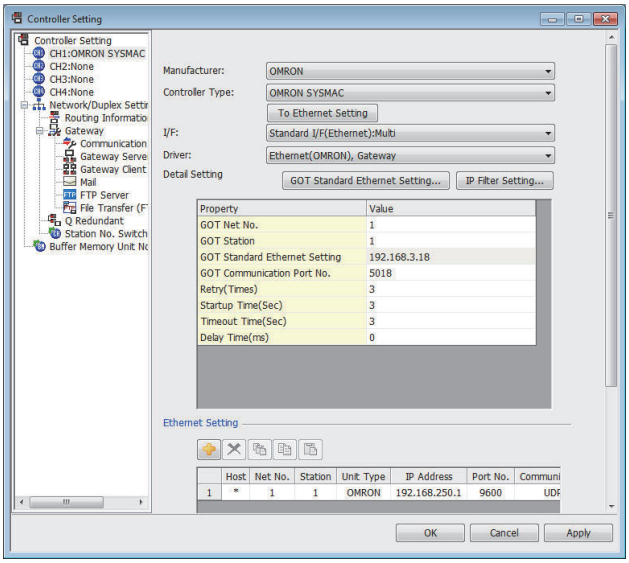

Item	Description	Set value
Host	The host is displayed. (The host is indicated with an asterisk (*).)	-
N/W No.	Set the network No. of the connected Ethernet module. (Default: blank)	1 to 127
Station*1	Set the station No. of the connected Ethernet module. (Default: blank)	1 to 254
Type	OMRON (fixed)	OMRON (fixed)
IP Address	Set the IP address of the connected Ethernet module. (Default: blank)	PLC side IP address
Port No.	Set the port No. of the connected Ethernet module. (Default: 9600)	256 to 65534
Communication format	Select a communication protocol. (Default: UDP)	UDP, TCP

*1 Each of [GOT Station] set in the communication detail setting and [Station] set in the Ethernet setting must be set to different station numbers.

➠ ■2. Communication detail settings

POINT

(1) Communication interface setting by the Utility
The communication interface setting can be changed on the Utility's [Communication setting] after writing [Communication Settings] of project data.
For details on the Utility, refer to the following manual.

➠ GOT2000 Series User's Manual (Utility)

(2) Precedence in communication settings
When settings are made by GT Designer3 or the Utility, the latest setting is effective.

■5. IP Filter Setting

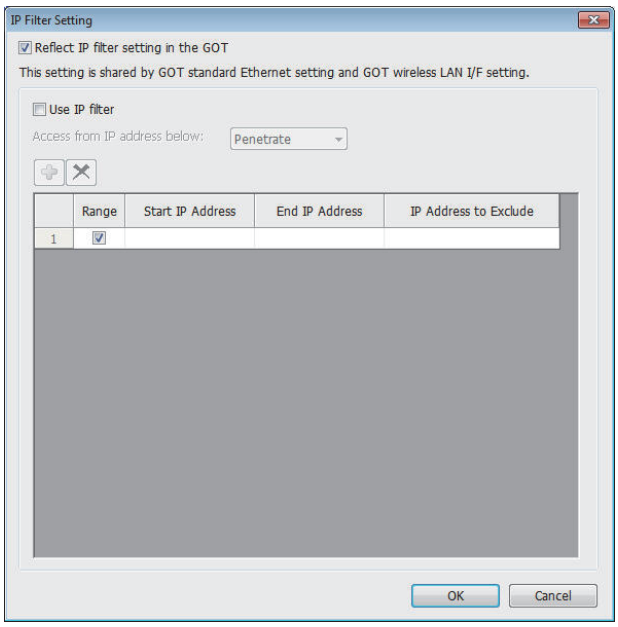

To improve security, the GOT 2000 series supports the IP Filter Setting.
For details on the IP Filter Setting, refer to the following manual.

➠ GT Designer3 (GOT2000) Screen Design Manual

4.3.3 PLC side setting

POINT

OMRON PLC

For the communication between OMRON PLC and GOT, use the FINS communication.
For the FINS communication, the node must be specified according to the realm of FINS.
However, for the Ethernet network, the data transfer according to the IP address is required.

- Automatic conversion method (dynamic)
- Automatic conversion method (static)
- IP address table conversion method
- Combined method

The following four methods are available for converting the FINS node address to the IP address.
For details of OMRON PLCs, refer to the following manual.

➠ OMRON PLC user's Manual

■1. Communication settings

For the PLC communication setting, set with a software for programming apparatus (CX-Programmer Ver.3.20 or later).

(1) CX-Programmer setting

Item		Setting range			
		Automatic conversion method (dynamic)*4	Automatic conversion method (static)*4*5	IP address table method*4*6	Combined method*4*6
Ethernet module CPU highly-functional module	Global	All 1 (Default)	All 1 (Default)	All 1 (Default)	All 1 (Default)
	IP address*1	[192]. [168]. [0]. [1]*3	[192]. [168]. [0]. [1]*3	[192]. [168]. [0]. [1]	[192]. [168]. [0]. [1]
	Subnet Mask	[255]. [255]. [255]. [0]	[255]. [255]. [255]. [0]	[255]. [255]. [255]. [0]	[255]. [255]. [255]. [0]
	FINS UDP port*1	9600	9600	9600	9600
	IP address conversion	Automatic conversion method (dynamic)	Automatic conversion method (static)	IP address table method	Combined method
	IP address table	-	-	10 [192]. [168]. [0]. [1] 11 [192]. [168]. [0]. [18]	10 [192]. [168]. [0]. [1]
	Transmission speed	Automatic detection (Default)	Automatic detection (Default)	Automatic detection (Default)	Automatic detection (Default)
	Node IP Address dynamically change*2	Change dynamically (Default)	Change dynamically (Default)	Change dynamically (Default)	Change dynamically (Default)

*1 Set the same [IP address] and [FINS UDP Port] settings as that of [IP address] and [Port No.] of the GT Designer3 Ethernet setting.

*2 The Node IP Address dynamically change function is available only when the Ethernet module to be used is Ver.1.3 or later.
For the setting, set in the module setting of CX-ProgrammerVer.5.0 or later or in the WEB function.
For details of Node IP Address dynamically change, refer to the following manual.

➠ OMRON PLC user's Manual

*3 Set the same lowermost bit of the [IP address] setting as that of the node setting switch of the module.

*4 Set the same [GOT Port No. (Communication)] In Communication detail settings as that of [Port No.] of the Ethernet setting.

*5 Set the same lowermost bit of the [GOT IP address] in Communication detail settings as that of [GOT PLC No.].

*6 Set the same lowermost bit of the [GOT IP address] and [GOT PLC No.] in Communication detail settings of GT Designer3 as that of [IP address table].

4.3.4 Precautions

■1. When connecting to multiple GOTs

(1) Setting PLC No.

When connecting two or more GOTs in the Ethernet network, set each [PLC No.] to the GOT.

➠ 4.3.2 ■4. Ethernet setting

(2) Setting IP address

Do not use the IP address "192.168.0.18" when using multiple GOTs with the GOT 1000 series mixed.
A communication error may occur on the GOT with the IP address.

■2. When setting IP address

Do not use "0" and "255" at the end of an IP address.
(Numbers of *.*.*.0 and *.*.*.255 are used by the system.)
The GOT may not monitor the controller correctly with the above numbers.
Consult with the administrator of the network before setting an IP address to the GOT and controller.

■3. When connecting to the multiple network equipment (including GOT) in a segment

By increasing the network load, the transmission speed between the GOT and PLC may be reduced.
The following actions may improve the communication performance.

- Using a switching hub
- More high speed by 100BASE-TX (100Mbps)
- Reduction of the monitoring points on GOT

■4. When setting Port No.

By setting of the OMRON PLC, set the same [GOT Communication Port No.] setting as that of [FINS UDP Port] of CXProgrammer.

4.4 Device Range that Can Be Set

The device ranges of controller that can be used for GOT are as follows.
Note that the device ranges in the following tables are the maximum values that can be set in GT Designer3.
The device specifications of controllers may differ depending on the models, even though belonging to the same series.
Please make the setting according to the specifications of the controller actually used.
When a non-existent device or a device number outside the range is set, other objects with correct device settings may not be monitored.

■1. Setting item

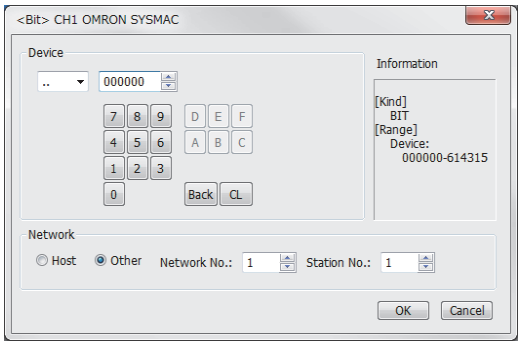

Item	Description
Device	Set the device name, device number, and bit number. The bit number can be set only when specifying the bit of word device.
Information	Displays the device type and setting range which are selected in [Device].

4.4.1 OMRON PLC

Device name		Setting range	Device No. representation
Bit device	I/O relay/internal auxiliary relay (...)	..000000 to ..614315	Decimal + Hexadecimal
	Data link relay (LR)	LR00000 to LR19915	
	Auxiliary memory relay (AR)	AR000000 to AR147115 AR1000000 to AR1153515	
	Holding relay (HR)	HR00000 to HR51115	
	Internal auxiliary relay/Work relay (WR)	WR00000 to WR51115	
	Timer contact (TIM)	TIM0000 to TIM4095	Decimal
	Counter contact (CNT)	CNT0000 to CNT4095	
	The bit specification of the word device*1*4 (except data link relay, auxiliary memory relay, holding relay and internal auxiliary relay.)	Setting range of each word device	-
Word device	I/O relay/internal auxiliary relay (...)	..0000 to ..6143	Decimal
	Data link relay (LR)	LR000 to LR199	
	Auxiliary memory relay (AR)	AR0000 to AR1471 AR10000 to AR11535	
	Holding relay (HR)	HR000 to HR511	
	Internal auxiliary relay/Work relay (WR)	WR000 to WR511	
	Data memory (DM)	DM00000 to DM32767	
	Timer (current value) (TIM)*3*5	TIM0000 to TIM4095	
	Counter (current value) (CNT)*3*5	CNT0000 to CNT4095	
	Extension data memory (EM current bank)*2	EM00000 to EM32767	
	Extension data memory (E0 to EC: 13banks)*2	E000000 to E032767 : E1800000 to E1832767	

*1 When executing the touch switch function set during the bit specification of the word device, do not write any data to the word device through the sequence program.

*2 Writing or reading the extension data memory using multiple banks is not allowed.

*3 Timer (current value) and counter (current value) are valid within the range of 0 to 9999.
(This applies to the 16 bit/32 bit device data.)

*4 This is not supported by GT10.

*5 “Timer (current value)” and “Counter (current value)” are handled as BCD values by the PLC.
If the connection form between the PLC and the GOT is serial, however, they are handled as unsigned binary 16-bit data by the GOT. Set the data type of “Monitor object” in the GOT to “Unsigned BIN16”.

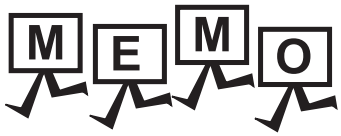
MEMO

5. CONNECTION TO OMRON TEMPERATURE CONTROLLER

5.1 Connectable Model List . . . . . 5 - 2
5.2 System Configuration . . . . . 5 - 3
5.3 Connection Diagram. . . . . 5 - 8
5.4 GOT Side Settings . . . . . 5 - 13
5.5 Temperature Controller Side Setting . . . . . 5 - 15
5.6 Device Range that Can Be Set. . . . . 5 - 19
5.7 Precautions . . . . . 5 - 21

5. CONNECTION TO OMRON TEMPERATURE CONTROLLER

5.1 Connectable Model List

The following table shows the connectable models.

Series	Model name	Communication Type	Connectable GOT	Refer to
THERMAC NEO	E5AN E5EN E5CN E5GN	RS-232 RS-422	GT27 GT25 GT23 GT21 GS	5.2.1
INPANEL NEO	E5ZN	RS-232 RS-422	GT27 GT25 GT23 GT21 GS	5.2.2

5.2.1 Connecting to the THERMAC NEO series

■1. When connecting to one temperature controller

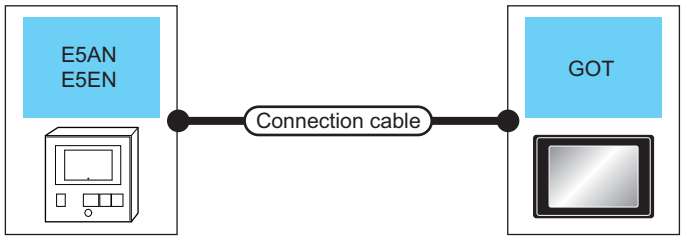

Temperature controller		Connection cable		GOT		Number of connectable equipment
Model name	Communication Type	Cable model Connection diagram number	Max. distance	Option device	Model	
E5AN E5EN	RS-232	User preparing RS-232 connection diagram 1)	15m	- (Built into GOT)	GT27 GT25 GS	1 temperature controller for 1 GOT
				GT15-RS2-9P	GT27 GT25	
				GT10-C02H-6PT9P*1	GT21 R4 GT21 R2	
		User preparing RS-232 connection diagram 3)	15m	- (Built into GOT)	GT21 R4 GT21 R2	

*1 When a GT10-C02H-6PT9P unit of the sub version A or B is used, do not ground the case of the D-sub (9-pin) connector.

■2. When connecting to multiple temperature controllers (via an interface converter)

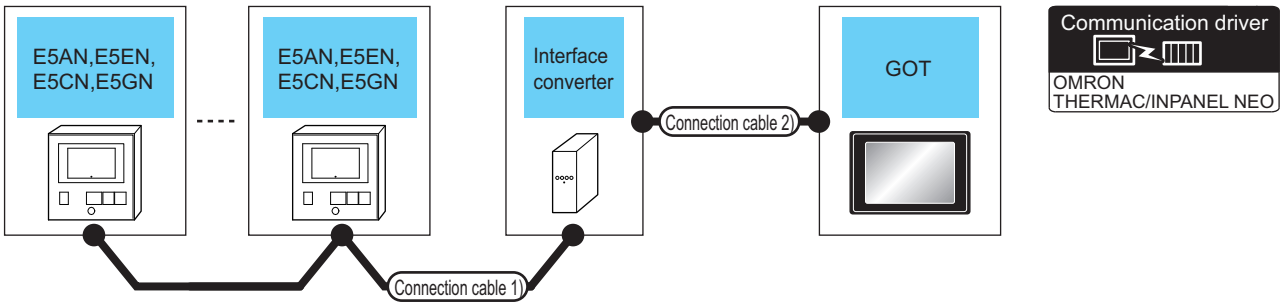

Temperature controller	Connection cable 1)		Interface converter*1		Connection cable 2)		GOT		Number of connectable equipment
Model name	Cable model Connection diagram number	Max. distance	Model name	Communication Type	Cable model Connection diagram number	Max. distance	Option device	Model	
E5AN E5EN E5CN E5GN	User preparing RS-485 connection diagram 1)	500m	K3SC-10	RS-232	User preparing RS-232 connection diagram 2)	15m	- (Built into GOT)	GT27 GT25 GS	32 temperature controllers for 1 GOT
							GT15-RS2-9P	GT27 GT25	
							GT10-C02H-6PT9P*2	GT21 (03P 04P R4) GT21 (03P 04P R2)	
					User preparing RS-232 connection diagram 4)	15m	- (Built into GOT)	GT21 04R GT21 (03P 04P R2)	

*1 The interface converter is a product manufactured by OMRON Corporation. For details on the product, contact OMRON Corporation.

*2 When a GT10-C02H-6PT9P unit of the sub version A or B is used, do not ground the case of the D-sub (9-pin) connector.

■3. When connecting to multiple temperature controllers

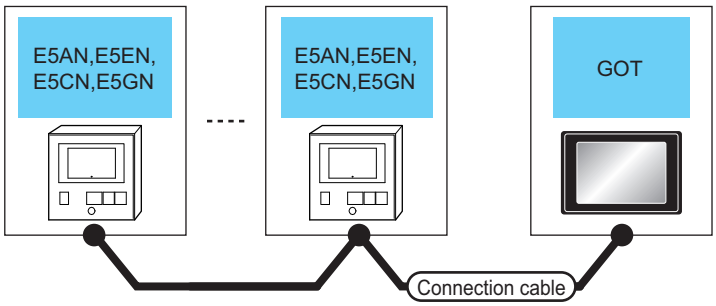

Communication driver
OMRON
THERMAC/INPANEL NEO

Temperature controller		Connection cable		GOT		Number of connectable equipment
Model name	Communication Type	Cable model Connection diagram number	Max. distance	Option device	Model	
E5AN E5EN E5CN E5GN	RS-485	User preparing RS-485 connection diagram 2)	500m	FA-LTBGT2R4CBL05 (0.5m) FA-LTBGT2R4CBL10 (1m) FA-LTBGT2R4CBL20 (2m)	GT27 GT25 GT23	31 temperature controllers for 1 GOT
		User preparing RS-485 connection diagram 3)	500m	GT15-RS4-TE	GT27 GT25	
		User preparing RS-485 connection diagram 4)	500m	- (Built into GOT)	GT27 GT25 GT23	
				GT10-C02H-9SC	GT2104R GT2103P-04P-R4	
		User preparing RS-485 connection diagram 5)		- (Built into GOT)	GT2104R GT2103P-04P-ET/R4 GT2103P-04P-R4	

5.2.2 Connecting to the INPANEL NEO

■1. When connecting to multiple temperature controllers (via interface converter)

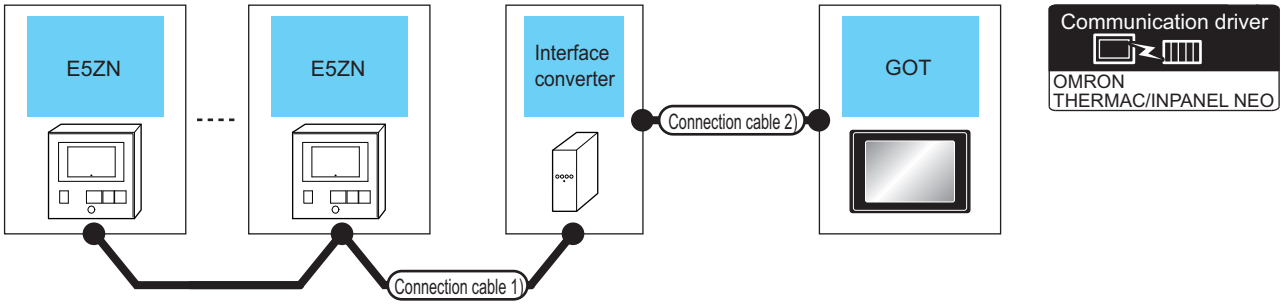

Temperature controller	Connection cable 1)		Interface converter*1		Connection cable 2)		GOT		Number of connectable equipment
Model name	Cable model Connection diagram number	Max. distance	Model name	Communication Type	Cable model Connection diagram number	Max. distance	Option device	Model	
E5ZN	User preparing RS-485 connection diagram 1)	500m	K3SC-10	RS-232	User preparing RS-232 connection diagram 2)	15m	- (Built into GOT)	GT27 GT25 GS	16 temperature controllers for 1 GOT
							GT15-RS2-9P	GT27 GT25	
							GT10-C02H-6PT09P*2	GT21 GT2103P 104P R4 GT2103P 104P R2	
					User preparing RS-232 connection diagram 4)	15m	- (Built into GOT)	GT2104R GT2103P 104P R2	

*1 The interface converter is a product manufactured by OMRON Corporation.For details of the product, contact OMRON Corporation.

*2 When a GT10-C02H-6PT9P unit of the sub version A or B is used, do not ground the case of the D-sub (9-pin) connector.

■2. When connecting to multiple temperature controllers

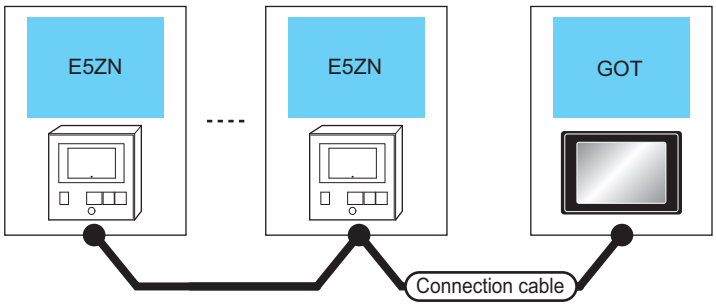

Communication driver
OMRON
THERMAC/INPANEL NEO

Temperature controller		Connection cable		GOT		Number of connectable equipment
Model name	Communication Type	Cable model Connection diagram number	Max. distance	Option device	Model	
E5ZN	RS-485	User preparing RS-485 connection diagram 2)	500m	FA-LTBGT2R4CBL05 (0.5m) FA-LTBGT2R4CBL10 (1m) FA-LTBGT2R4CBL20 (2m)	GT27 GT25 GT23	15 temperature controllers for 1 GOT
		User preparing RS-485 connection diagram 3)	500m	GT15-RS4-TE	GT27 GT25	
		User preparing RS-485 connection diagram 4)	500m	- (Built into GOT)	GT27 GT25 GT23	
				GT10-C02H-9SC	GT21 GT2103P GT2104P R4	
		User preparing RS-485 connection diagram 5)		- (Built into GOT)	GT21 GT2103P GT2104P ET/R4 GT2103P GT2104P R4	

*1 Connect it to the RS-232 interface (built into GOT).

5.3 Connection Diagram

The following diagram shows the connection between the GOT and the PLC.

5.3.1 RS-232 cable

■1. Connection diagram

(1) RS-232 connection diagram 1)

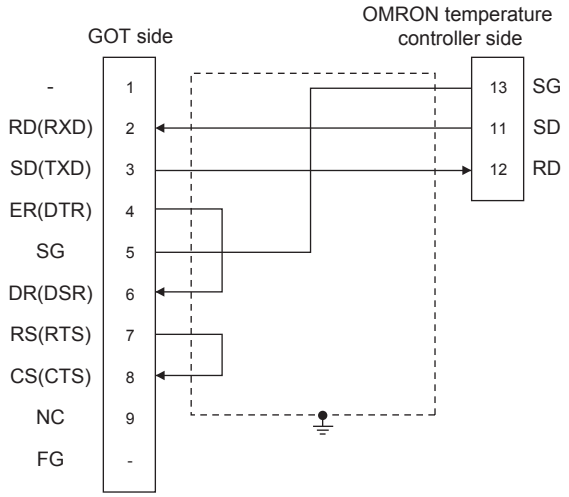

(2) RS-232 connection diagram 2)

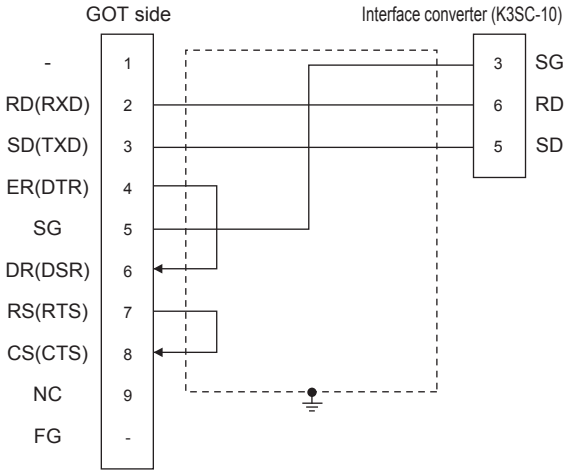

(3) RS-232 connection diagram 3)

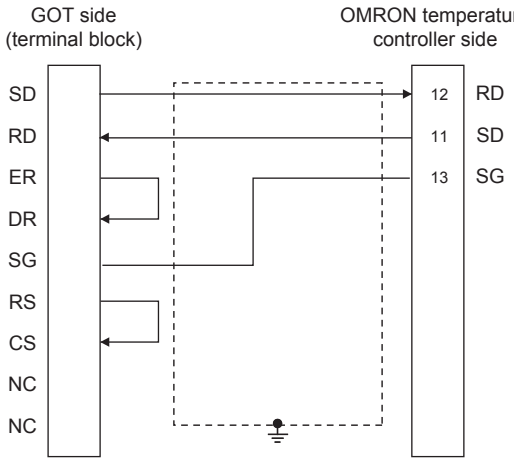

(4) RS-232 connection diagram 4)

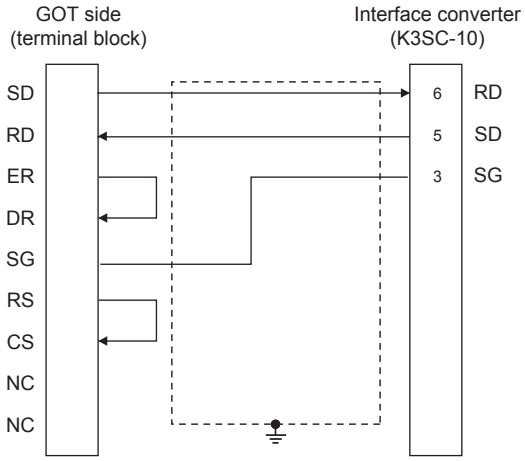

■2. Precautions when preparing a cable

(1) Cable length

The length of the RS-232 cable must be 15m or less

(2) GOT side connector

For the GOT side connector, refer to the following.

➠ 1.4.1 GOT connector specifications

(3) OMRON temperature controller side connector

Use the connector compatible with the OMRON temperature controller.
For details, refer to the user's manual of the OMRON temperature controller.

5.3.2 RS-485 cable

■1. Connection diagram

(1) RS-485 connection diagram 1)

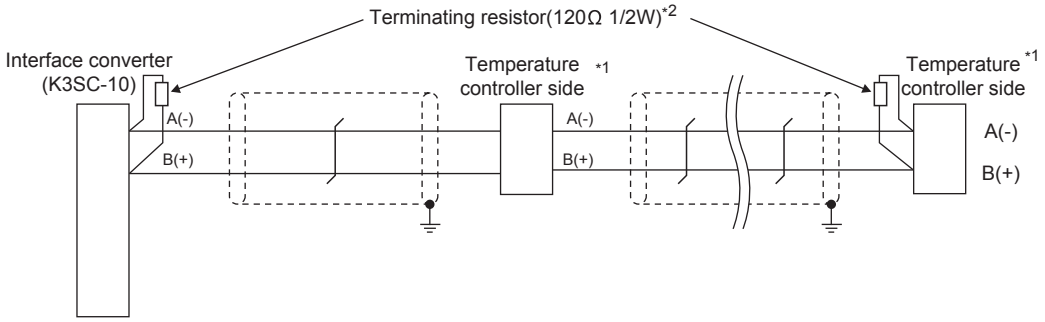

*1 Pin No. of temperature controller differs depending on the model.Refer to the following.

*2 Terminating resistor should be provided for a temperature controller and an interface converter which will be terminating resistors.

Signal name	Model of temperature controller			Interface converter (K3SC-10)
	E5AN E5EN E5CN	E5GN	E5ZN	
	Pin No.	Pin No.	Pin No.	Pin No.
A(-)	12	6	24	8
B(+)	11	5	23	11

(2) RS-485 connection diagram 2)

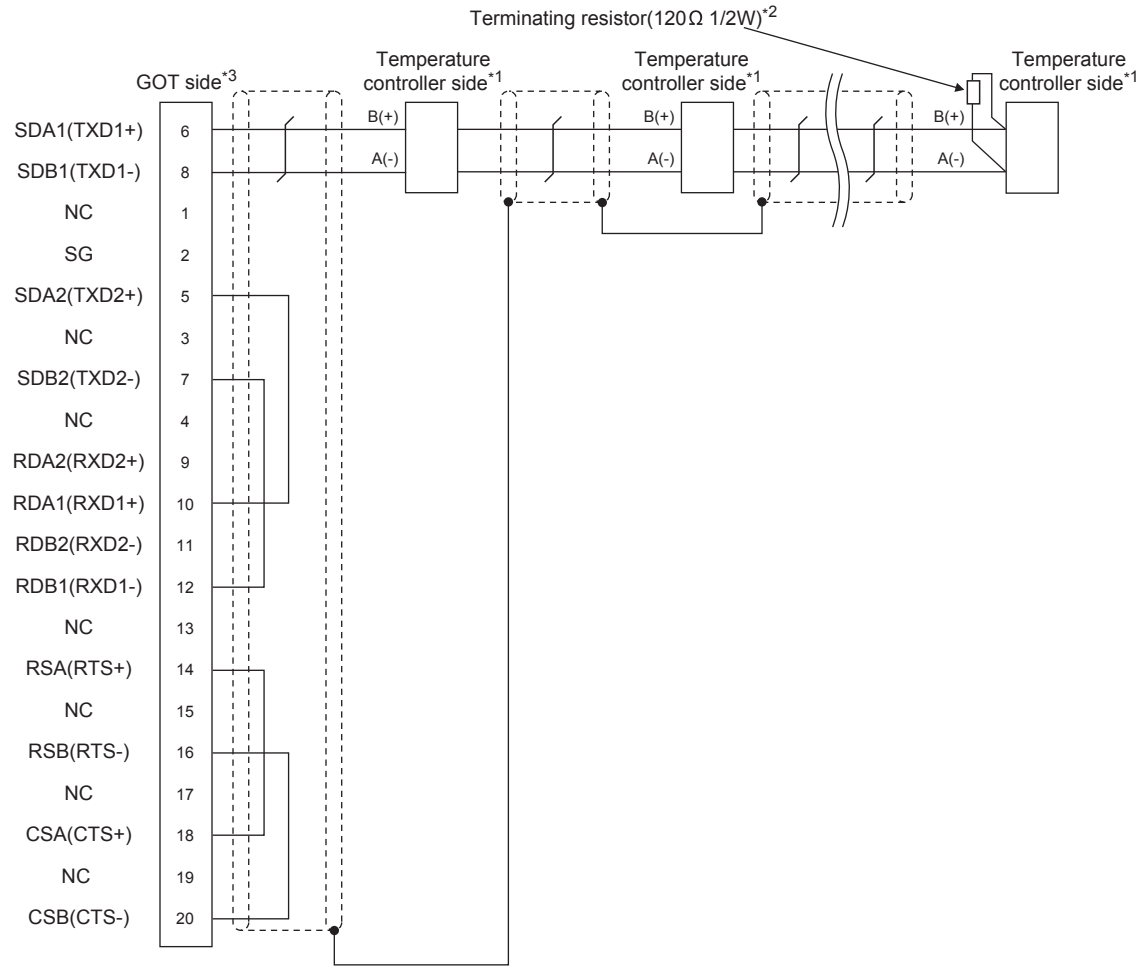

*1 Pin No. of temperature controller differs depending on the model.Refer to the following.

*2 Terminating resistor should be provided for a temperature controller and an interface converter which will be terminating resistors.

*3 Set the terminating resistor of GOT side, which will be a terminal, to ”Enable”.

➠ 1.4.3 Terminating resistors of GOT

Signal name	Model of temperature controller		
	E5AN E5EN E5CN	E5GN	E5ZN
	Pin No.	Pin No.	Pin No.
A(-)	12	6	24
B(+)	11	5	23

(3) RS-485 connection diagram 3)

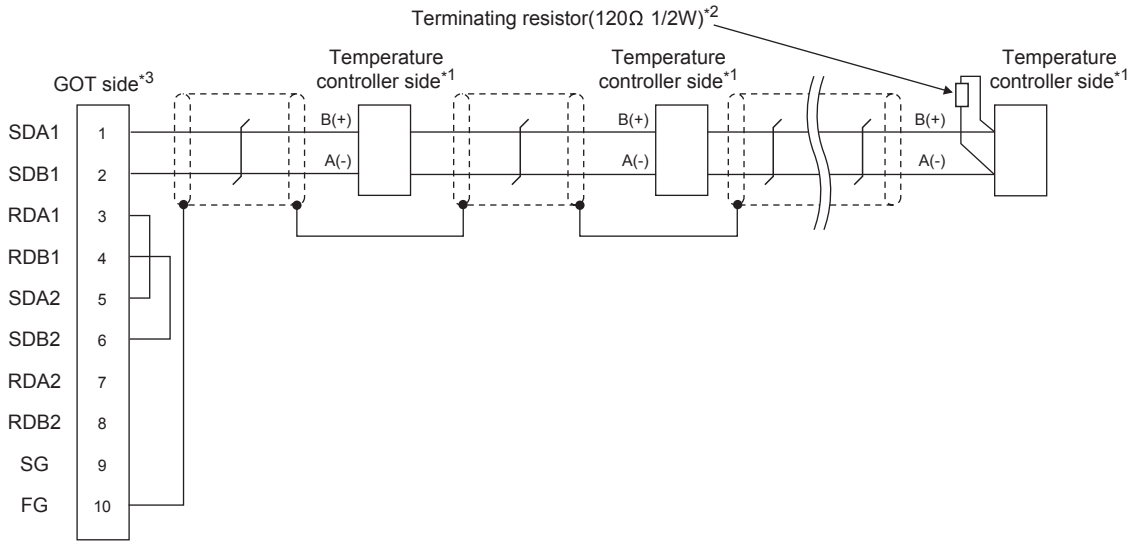

*1 Pin No. of temperature controller differs depending on the model.Refer to the following.
*2 Terminating resistor should be provided for a temperature controller and an interface converter which will be terminating resistors.
*3 Set the terminating resistor of GOT side, which will be a terminal, to "Enable".

➠ 1.4.3 Terminating resistors of GOT

Signal name	Model of temperature controller		
	E5AN E5EN E5CN	E5GN	E5ZN
	Pin No.	Pin No.	Pin No.
A(-)	12	6	24
B(+)	11	5	23

(4) RS-485 connection diagram 4)

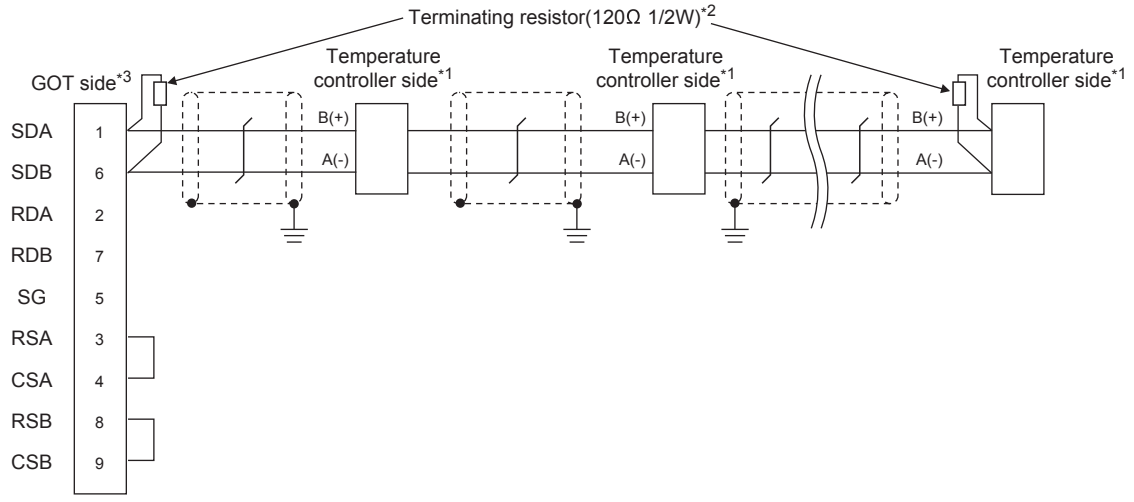

*1 Pin No. of temperature controller differs depending on the model. Refer to the following.
*2 Terminating resistor should be provided for a temperature controller and an interface converter which will be terminating resistors.
*3 Set the terminating resistor of GOT side, which will be a terminal, to "110Ω".

➠ 1.4.3 Terminating resistors of GOT

Signal name	Model of temperature controller		
	E5AN E5EN E5CN	E5GN	E5ZN
	Pin No.	Pin No.	Pin No.
A(-)	12	6	24
B(+)	11	5	23

(5) RS-485 connection diagram 5)

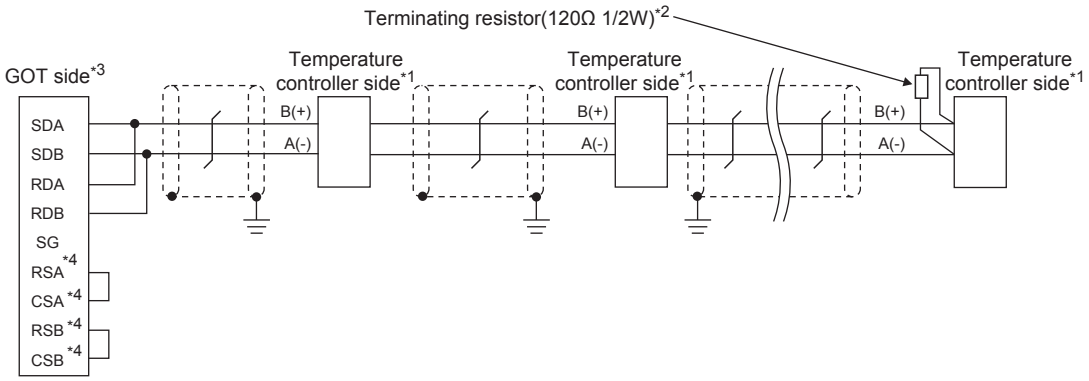

*1 Pin No. of temperature controller differs depending on the model. Refer to the following.

*2 Terminating resistor should be provided for a temperature controller and an interface converter which will be terminating resistors.

*3 Set the terminating resistor of GOT side, which will be a terminal, to "110Ω".

➠ 1.4.3 Terminating resistors of GOT

Signal name	Model of temperature controller		
	E5AN E5EN E5CN	E5GN	E5ZN
	Pin No.	Pin No.	Pin No.
A(-)	12	6	24
B(+)	11	5	23

*4 The signals RSA, RSB, CSA, and CSB are not provided for GT03P GT04P GT04R. Return connection is not required.

■2. Precautions when preparing a cable

(1) Cable length

The length of the RS-485 cable must be 500m or less.

(2) GOT side connector

For the GOT side connector, refer to the following.

➠ 1.4.1 GOT connector specifications

(3) OMRON temperature controller side connector

Use the connector compatible with the OMRON temperature controller.
For details, refer to the user's manual of the OMRON temperature controller.

■3. Setting terminating resistors

(1) GOT side

Set the terminating resistor setting switch of the GOT main unit to "100 OHM".
For details of terminating resistor settings, refer to the following.

➠ 1.4.3 Terminating resistors of GOT

(2) OMRON temperature controller side

When connecting a OMRON temperature controller to the GOT, the terminating resistor must be connected to the OMRON temperature controller.

➠ User's Manual of the OMRON temperature controller

5.4.1 Setting communication interface (Communication settings)

Set the channel of the equipment to be connected to the GOT.

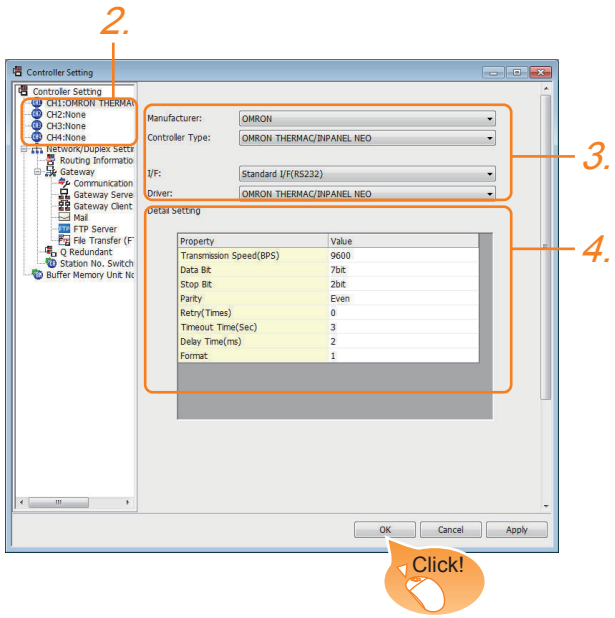

Step 1. Select [Common] → [Controller Setting] from the menu.

Step 2. The Controller Setting window is displayed. Select the channel to be used from the list menu.

Step 3. Set the following items.
- Manufacturer: OMRON
- Controller Type: OMRON THERMAC/INPANEL NEO
- I/F: Interface to be used
- Driver: OMRON THERMAC/INPANEL NEO

Step 4. The detailed setting is displayed after Manufacturer, Controller Type, I/F, and Driver are set. Make the settings according to the usage environment.

➠ 5.4.2 Communication detail settings

Click the [OK] button when settings are completed.

POINT

The settings of connecting equipment can be confirmed in [I/F Communication Setting]. For details, refer to the following.

➠ 1.1.2 I/F communication setting

5.4.2 Communication detail settings

Make the settings according to the usage environment.

Property	Value
Transmission Speed(BPS)	9600
Data Bit	7 bit
Stop Bit	2 bit
Parity	Even
Retry(Times)	0
Timeout Time(Sec)	3
Delay Time(ms)	2
Format	1

Item	Description	Range
Transmission Speed	Set this item when change the transmission speed used for communication with the connected equipment. (Default: 9600bps)	9600bps, 19200bps, 38400bps, 57600bps, 115200bps
Data Bit	Set this item when change the data length used for communication with the connected equipment. (Default: 7bits)	7bits/8bits
Stop Bit	Specify the stop bit length for communications. (Default: 2bits)	1bit/2bits
Parity	Specify whether or not to perform a parity check, and how it is performed during communication. (Default: Even)	None Even Odd
Retry	Set the number of retries to be performed when a communication error occurs. (Default: 0time)	0 to 5times
Timeout Time	Set the time period for a communication to time out. (Default: 3sec)	3 to 30sec
Delay Time	Set this item to adjust the transmission timing of the communication request from the GOT. (Default: 2ms)	0 to 300 (ms)
Format	Select the communication format. (Default: 1) format 1: only continuous access format 2: continuous and random access	1/2

POINT

(1) Delay Time

When connecting to the temperature controller E5ZN, set the delay time to 5ms or more.

(2) Format setting

The compatible format of temperature controller differs depending on models.

Model	Compatible format
E5AN, E5CN, E5EN, E5GN	Format 1 only
E5ZN	Format 1 or Format 2

For the continuous access and random access of the temperature controller, refer to the following manual.

➠ User's Manual of the OMRON temperature controller

(3) Communication interface setting by the Utility

The communication interface setting can be changed on the Utility's [Communication Settings] after writing [Communication Settings] of project data.

For details on the Utility, refer to the following manual.

➠ GOT2000 Series User's Manual (Utility)

(4) Precedence in communication settings

When settings are made by GT Designer3 or the Utility, the latest setting is effective.

POINT

OMRON temperature controller

For details of OMRON temperature controller, refer to the following manual.

➠ User's Manual of the OMRON temperature controller

Model name		Refer to
Temperature controller	E5AN, E5EN, E5CN, E5GN	5.5.1
	E5ZN	5.5.2
Interface converter	K3SC-10	5.5.3

5.5.1 Connecting E5AN, E5EN, E5CN, E5GN

Set the communication data by operating the key of the temperature controller.

Item	Set value
Protocol	CompoWay/F (Sysway)
Transmission speed*1	9600bps, 19200bps
Data bit*1	8 bits, 7 bits
Parity bit*1	Odd, Even, None
Stop bit*1	1bit, 2bits
Communication unit No.*2	0 to 99
CMWT (Communications writing) *3	ON

*1 Adjust the settings with GOT settings.
*2 Select the communication unit No. without overlapping with that of other units.
*3 When changing the device values of the temperature controller from the GOT, turn ON CMWT (Communications writing) in advance.

5.5.2 Connecting E5ZN

Set the communication data by operating the key of the temperature controller.

Item	Set value
Transmission speed*1	9600bps, 38400bps
Data bit*1	8 bits, 7 bits
Parity bit*1	Odd, Even, None
Stop bit*1	1bit, 2bits
Communication unit No.*2	0 to 15
CMWT (Communications writing) *3	ON

*1 Adjust the settings with GOT settings.
*2 Select the communication unit No. without overlapping with that of other units.
*3 When changing the device values of the temperature controller from the GOT, turn ON CMWT (Communications writing) in advance.

5.5.3 Connection to interface converter (K3SC-10)

■1. Communication settings

Make the communication settings by operating the DIP switch of the temperature controller.

Item	Set value
Transmission speed*1	19200bps, 38400bps
Data bit*1	7 bits, 8 bits
Parity bit*1	Odd, Even, None
Stop bit*1	1bit, 2bits
Communication Type	RS-232↔RS485
Echo back*2	With, Without

*1 Adjust the settings with GOT settings.
*2 Set to “Without”.

■2. Settings by DIP switch

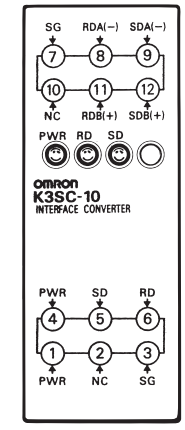

Front of K3SC-10 body

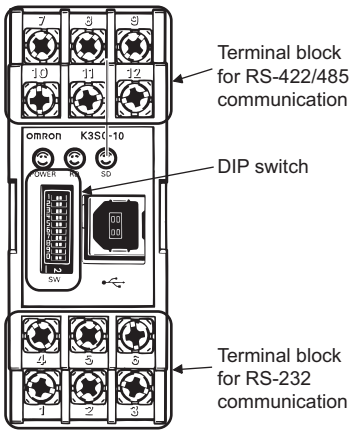

Inside of K3SC-10 body
(When removing the front cover)

(1) Transmission speed settings

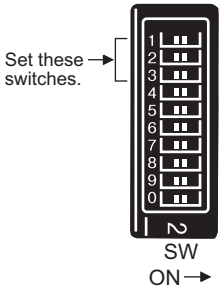

Transmission speed (bps)	Switch No.		
	1	2	3
1200	ON	OFF	OFF
2400	OFF	ON	OFF
4800	ON	ON	OFF
9600	OFF	OFF	OFF
19200	ON	OFF	ON
38400	OFF	ON	ON

(2) Settings of data length, parity bit, stop bit, master/slave device and echoback

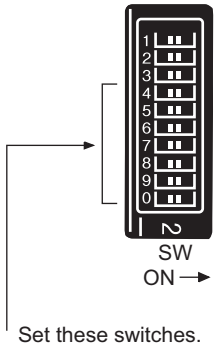

Setting item	Set value	Switch No.						
		4	5	6	7	8	9	0
Data bit	7bits	OFF						
	8bits	ON						
Stop bit	2bits		OFF					
	1bit		ON					
Parity	Even			OFF	OFF			
	Odd			ON	OFF			
	None			OFF	ON			
Communication Type	RS232↔RS422					OFF	ON	
	RS-232↔RS485					OFF	OFF	
Echo back	Without							OFF
	With							ON

5.5.4 Station No. settings

Set each station number so that no station number overlaps.
The station number can be set without regard to the cable connection order. There is no problem even if station numbers are not consecutive.

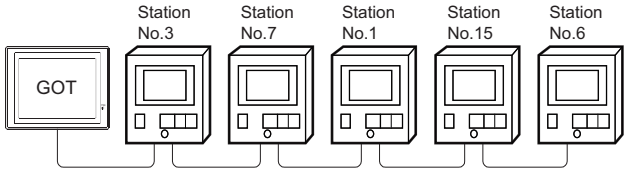

Examples of station number setting

■1. Direct specification

When setting the device, specify the station number of the temperature controller of which data is to be changed.

Model name	Specification range
E5AN, E5EN, E5CN, E5GN	0 to 99
E5ZN	0 to 15

■2. Indirect specification

When setting the device, indirectly specify the station number of the temperature controller of which data is to be changed using the 16-bit GOT internal data register (GD10 to GD25).
When specifying the station No. from 100 to 115 on GT Designer3, the value of GD10 to GD25 compatible to the station No. specification will be the station No. of the temperature controller.

Specification station NO.	Compatible device	Setting range
100	GD10	0 to 99: For E5AN, E5EN, E5CN or E5GN 0 to 15: For E5ZN For the setting other than the above, error (dedicated device is out of range) will occur.
101	GD11	
102	GD12	
103	GD13	
104	GD14	
105	GD15	
106	GD16	
107	GD17	
108	GD18	
109	GD19	
110	GD20	
111	GD21	
112	GD22	
113	GD23	
114	GD24	
115	GD25	

■3. All station specification

Target station differs depending on write-in operation or read-out operation.

- For write-in operation, all station will be a target.
- For read-out operation, only one station will be a target.

5.6 Device Range that Can Be Set

The device ranges of controller that can be used for GOT are as follows.
Note that the device ranges in the following tables are the maximum values that can be set in GT Designer3.
The device specifications of controllers may differ depending on the models, even though belonging to the same series.
Please make the setting according to the specifications of the controller actually used.
When a non-existent device or a device number outside the range is set, other objects with correct device settings may not be monitored.

■1. Setting item

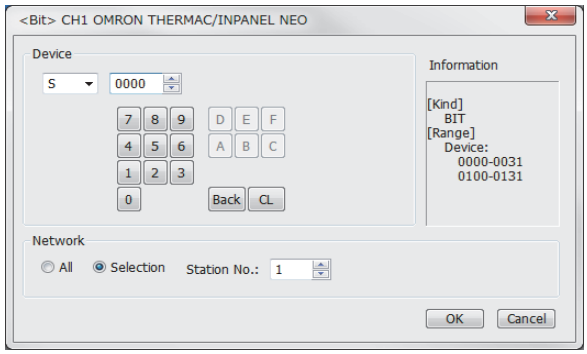

Item	Description	
Device	Set the device name, device number, and bit number. The bit number can be set only when specifying the bit of word device.	
Information	Displays the device type and setting range which are selected in [Device].	
Network	Set the monitor target of the set device.	
	All	Select this item when writing data to all temperature connected. During monitoring, the temperature controller of station No.0 is monitored. (When writing the data in numerical input, the data is written to all connected temperature controllers during input, and the temperature controller of station No. 0 is monitored during other than input (displaying).)
	Station No.	Select this item when monitoring the temperature controller of the specified station No. After selecting, set the station No. in the following range. 0 to 99:To monitor the temperature controller of the specified station No. 100 to 115:To specify the station No. of the temperature controller to be monitored by the value of GOT data register (GD).*1

*1 The following table shows the relation between station numbers of the PLC and the GOT data register.

Station No.	GOT data register (GD)	Setting range
100	GD10	0 to 99 (If setting a value outside the range above, a device range error occurs.)
101	GD11	
:	:	
114	GD24	
115	GD25	

POINT

Device settings of OMRON temperature controller

(1) When setting the (S)

Make settings for status by a channel number and a bit position.

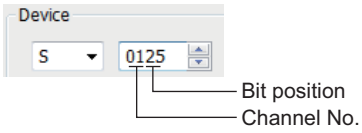

(2) When setting variable area (0), variable area (1) and variable area (2)

Make setting for variable areas by a channel number and address.

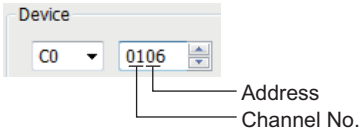

5.6.1 OMRON temperature controller (OMRON THERMAC/INPANEL NEO)

Device name		Setting range	Device No. representation
Bit device	Status (S)*1	S0000 to S0031 S0100 to S0131	Decimal
Word device	Operation command (A)*2	A0000 to A000C	Hexadecimal
Double word device	Variable area 0 (C0)*1*3	C00000 to C00006 C00100 to C00106	Decimal + Hexadecimal
	Variable area 1 (C1)*3	C10000 to C1001C C10100 to C1011C	
	Variable area 3 (C3)*3	C30000 to C3003E C30100 to C3013E	

*1 Only reading is possible.

*2 Only writing is possible.
Numerical input cannot be used.
When writing, use [Word Set] of a data set switch.

*3 Only 32-bit (2-word) designation is allowed.

5.7 Precautions

■1. Station number setting of the temperature controller system

Make sure to establish temperature controller system with No.1 station.

■2. GOT clock control

Since the temperature controller does not have a clock function, the settings of [time adjusting] or [Broadcast] by GOT clock control will be disabled.

■3. Disconnecting some of multiple connected equipment

The GOT can disconnect some of multiple connected equipment by setting GOT internal device.For example, the faulty station where a communication timeout error occurs can be disconnected from connected equipment.
For details of GOT internal device setting, refer to the following manual.

➠ GT Designer3 (GOT2000) Screen Design Manual

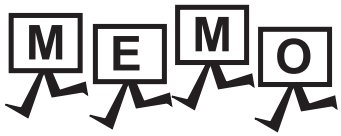
MEMO

6. CONNECTION TO KEYENCE PLC

6.1 Connectable Model List . . . . . 6 - 2
6.2 Serial Connection . . . . . 6 - 3
6.3 Ethernet Connection . . . . . 6 - 24
6.4 Device Range that Can Be Set. . . . . 6 - 32

6. CONNECTION TO KEYENCE PLC

6.1 Connectable Model List

The following table shows the connectable models.

Model name	Clock	Communication Type	Connectable GOT	Refer to
KV-5500 KV-5000	○	RS-232	GT27 GT25 GT23 GT21 GS	➡ 6.2.1
		RS-422		
		RS-485	GT27 GT25 GT23 GT21	
		Ethernet	GT27 GT25 GT23 GT21 GS	➡ 6.3.1
KV-3000	○	RS-232	GT27 GT25 GT23 GT21 GS	➡ 6.2.2
		RS-422		
		RS-485	GT27 GT25 GT23 GT21	
		Ethernet	GT27 GT25 GT23 GT21 GS	➡ 6.3.1
KV-1000	○	RS-232	GT27 GT25 GT23 GT21 GS	➡ 6.2.3
		RS-422		
		RS-485	GT27 GT25 GT23 GT21	
		Ethernet	GT27 GT25 GT23 GT21 GS	➡ 6.3.1
KV-700	○	RS-232	GT27 GT25 GT23 GT21 GS	➡ 6.2.4
		RS-422		
		RS-485	GT27 GT25 GT23 GT21	
		Ethernet	GT27 GT25 GT23 GT21 GS	➡ 6.3.1

6.2 Serial Connection

6.2.1 Connecting to KV-5500, KV-5000

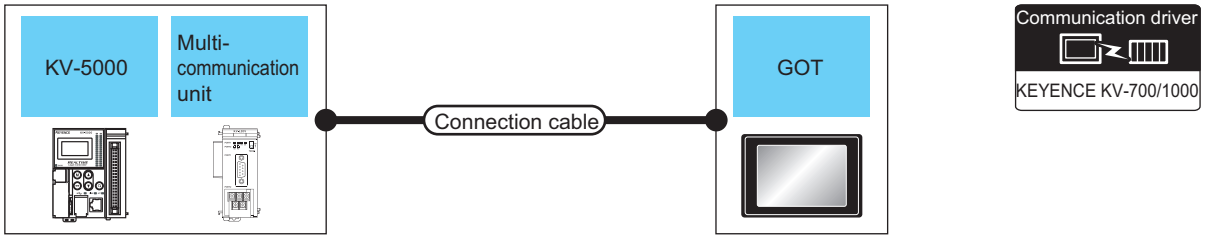

PLC			Connection cable		GOT		Number of connectable equipment
Model name	Multi-communication unit*1	Communication Type	Cable model Connection diagram number	Max. distance	Option device	Model	
KV-5500 KV-5000	KV-L20V (port 1)	RS-232	GT09-C30R21102-9S(3m) or User preparing RS-232 connection diagram 2)	15m	- (Built into GOT)	GT27 GT25 GT23 GT21(05Q) GS	1 GOT for 1 multi-communication unit
					GT15-RS2-9P	GT27 GT25	
					GT10-C02H-6PT9P*2	GT21(03P 04P R4) GT21(03P 04P R2)	
			User preparing RS-232 connection diagram 5)	15m	- (Built into GOT)	GT21(04R) GT21(03P 04P R2)	
	KV-L20V (port 2)	RS-232	GT09-C30R21103-3T(3m) or User preparing RS-232 connection diagram 3)	15m	- (Built into GOT)	GT27 GT25 GT23 GT21(05Q) GS	
					GT15-RS2-9P	GT27 GT25	
					GT10-C02H-6PT9P*2	GT21(03P 04P R4) GT21(03P 04P R2)	
			User preparing RS-232 connection diagram 6)	15m	- (Built into GOT)	GT21(04R) GT21(03P 04P R2)	

PLC			Connection cable		GOT		Number of connectable equipment
Model name	Multi-communication unit*1	Communication Type	Cable model Connection diagram number	Max. distance	Option device	Model	
KV-5500 KV-5000	KV-L20V (port 2)	RS-422	GT09-C30R41101-5T(3m) GT09-C100R41101-5T(10m) GT09-C200R41101-5T(20m) GT09-C300R41101-5T(30m) or User preparing RS-422 connection diagram 1)	500m	- (Built into GOT)	GT27 GT25 GT23 GT21(05Q) GS	1 GOT for 1 multi-communication unit
					GT15-RS4-9S	GT27 GT25	
					GT10-C02H-9SC	GT21(04R) GT21(03P 04P R4)	
			User preparing RS-422 connection diagram 2)	500m	- (Built into GOT)	GT21(04R) GT21(03P 04P ET/R4) GT21(03P 04P R4)	
		RS-485	User preparing RS-485 connection diagram 1)	500m	- (Built into GOT)	GT27 GT25 GT23 GT21(05Q)	
					GT15-RS4-9S	GT27 GT25	
					GT10-C02H-9SC	GT21(04R) GT21(03P 04P R4)	
			User preparing RS-485 connection diagram 2)	500m	- (Built into GOT)	GT21(04R) GT21(03P 04P ET/R4) GT21(03P 04P R4)	

*1 The multi-communication unit is a product manufactured by KEYENCE CORPORATION.
For details of the product, contact KEYENCE CORPORATION.

*2 When a GT10-C02H-6PT9P unit of the sub version A or B is used, do not ground the case of the D-sub (9-pin) connector.

6.2.2 Connecting to KV-3000

■1. When connecting to a PLC

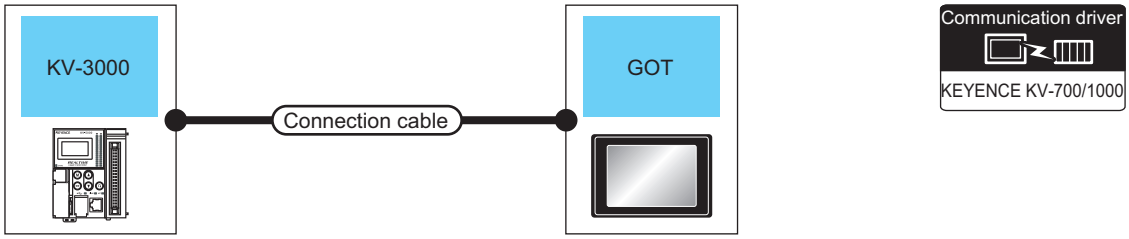

PLC		Connection cable			GOT		Number of connectable equipment
Model name	Communication Type	Cable model Connection diagram number	Conversion connector*1	Max. distance	Option device	Model	
KV-3000	RS-232	GT09-C30R21101-6P or User preparing RS-232 connection diagram 1)	-	15m	- (Built into GT)	GT27 GT25 GT23 GT05Q-21 GS	1 GOT for 1 PLC
					GT15-RS2-9P	GT27 GT25	
					GT10-C02H-6PT9P*2	GT03P-21 GT03P-21	
		User preparing RS-232 connection diagram 4)	-	15m	- (Built into GT)	GT04R-21 GT03P-21	
		OP-26487*1	OP-26486	2.5m	- (Built into GT)	GT27 GT25 GT23 GT05Q-21 GS	
					GT15-RS2-9P	GT27 GT25	
					GT10-C02H-6PT9P*2	GT03P-21 GT03P-21	

*1 The cable and conversion connector are products manufactured by KEYENCE CORPORATION.
For details of the product, contact KEYENCE CORPORATION.

*2 When a GT10-C02H-6PT9P unit of the sub version A or B is used, do not ground the case of the D-sub (9-pin) connector.

■2. When connecting to multi-communication unit

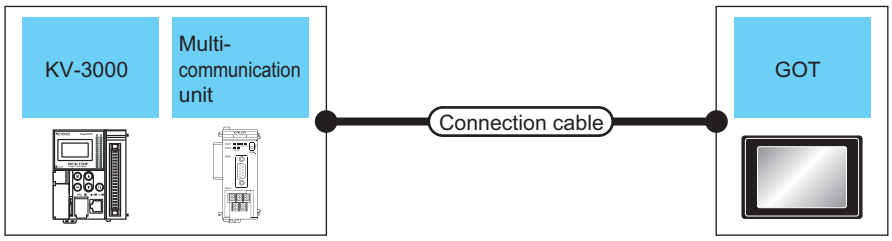

PLC			Connection cable		GOT		Number of connectable equipment
Model name	Multi-communication unit*1	Communication Type	Cable model Connection diagram number	Max. distance	Option device	Model	
KV-3000	KV-L20V (port 1)	RS-232	GT09-C30R21102-9S(3m) or User preparing RS-232 connection diagram 2)	15m	- (Built into GOT)	GT27 GT25 GT23 GT21(05Q) GS	1 GOT for 1 multi-communication unit
					GT15-RS2-9P	GT27 GT25	
					GT10-C02H-6PT9P*2	GT21(03P 04P R4) GT21(03P 04P R2)	
			User preparing RS-232 connection diagram 5)	15m	- (Built into GOT)	GT21(04R) GT21(03P 04P R2)	
	KV-L20V (port 2)	RS-232	GT09-C30R21103-3T(3m) or User preparing RS-232 connection diagram 3)	15m	- (Built into GOT)	GT27 GT25 GT23 GT21(05Q) GS	
					GT15-RS2-9P	GT27 GT25	
					GT10-C02H-6PT9P*2	GT21(03P 04P R4) GT21(03P 04P R2)	
			User preparing RS-232 connection diagram 6)	15m	- (Built into GOT)	GT21(04R) GT21(03P 04P R2)	

PLC			Connection cable		GOT		Number of connectable equipment
Model name	Multi-communication unit*1	Communication Type	Cable model Connection diagram number	Max. distance	Option device	Model	
KV-3000	KV-L20V (port 2)	RS-422	GT09-C30R41101-5T(3m) GT09-C100R41101-5T(10m) GT09-C200R41101-5T(20m) GT09-C300R41101-5T(30m) or User preparing RS-422 connection diagram 1)	500m	- (Built into GOT)	GT27 GT25 GT23 GT21 GS	1 GOT for 1 multi-communication unit
					GT15-RS4-9S	GT27 GT25	
					GT10-C02H-9SC	GT21 GT21 R4	
			User preparing RS-422 connection diagram 2)	500m	- (Built into GOT)	GT21 GT21 ET/R4 GT21 R4	
	KV-L20V (port 2)	RS-485	User preparing RS-485 connection diagram 1)	500m	- (Built into GOT)	GT27 GT25 GT23 GT21 GS	1 GOT for 1 multi-communication unit
					GT15-RS4-9S	GT27 GT25	
					GT10-C02H-9SC	GT21 GT21 R4	
			User preparing RS-485 connection diagram 2)	500m	- (Built into GOT)	GT21 GT21 ET/R4 GT21 R4	

*1 The multi-communication unit is a product manufactured by KEYENCE CORPORATION.
For details of the product, contact KEYENCE CORPORATION.

*2 When a GT10-C02H-6PT9P unit of the sub version A or B is used, do not ground the case of the D-sub (9-pin) connector.

6.2.3 Connecting to KV-1000

■1. When connecting to PLC

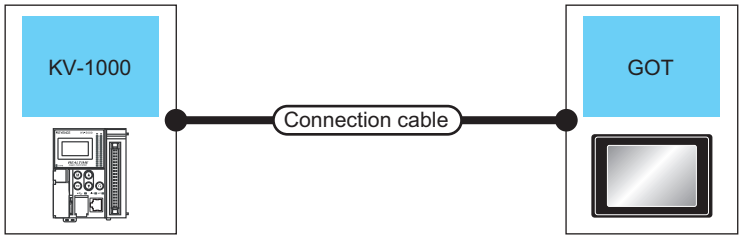

PLC		Connection cable			GOT		Number of connectable equipment
Model name	Communication Type	Cable model Connection diagram number	Conversion connector*1	Max. distance	Option device	Model	
KV-1000	RS-232	GT09-C30R21101-6P or User preparing RS-232 connection diagram 1)	-	15m	- (Built into GOT)	GT27 GT25 GT23 GT21(05Q) GS	1 GOT for 1 PLC
					GT15-RS2-9P	GT27 GT25	
					GT10-C02H-6PT9P*2	GT21(03P 04P R4) GT21(03P 04P R2)	
		User preparing RS-232 connection diagram 4)	-	15m	- (Built into GOT)	GT21(04R) GT21(03P 04P R2)	
		OP-26487*1	OP-26486	2.5m	- (Built into GOT)	GT27 GT25 GT23 GT21(05Q) GS	
					GT15-RS2-9P	GT27 GT25	
					GT10-C02H-6PT9P*2	GT21(03P 04P R4) GT21(03P 04P R2)	

*1 The cable and conversion connector are products manufactured by KEYENCE CORPORATION.
For details of the product, contact KEYENCE CORPORATION.

*2 When a GT10-C02H-6PT9P unit of the sub version A or B is used, do not ground the case of the D-sub (9-pin) connector.

■2. When connecting to multi-communication unit

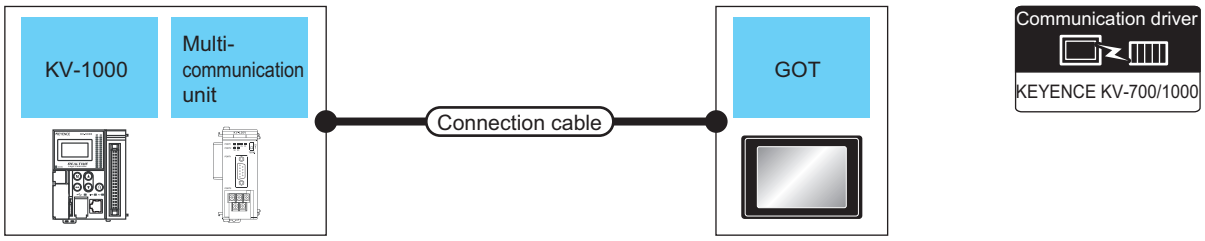

PLC			Connection cable		GOT		Number of connectable equipment
Model name	Multi-communication unit*2	Communication Type	Cable model Connection diagram number	Max. distance	Option device	Model	
KV-1000	KV-L20R, KV-L20V (port 1)	RS-232	GT09-C30R21102-9S(3m) or User preparing RS-232 connection diagram 2)	15m	- (Built into GOT)	GT27 GT25 GT23 GT21(05Q) GS	1 GOT for 1 multi-communication unit
					GT15-RS2-9P	GT27 GT25	
					GT10-C02H-6PT9P*2	GT21(03P 04P R4) GT21(03P 04P R2)	
			User preparing RS-232 connection diagram 5)	15m	- (Built into GOT)	GT21(04R) GT21(03P 04P R2)	
	KV-L20R, KV-L20V (port 2)	RS-232	GT09-C30R21103-3T(3m) or User preparing RS-232 connection diagram 3)	15m	- (Built into GOT)	GT27 GT25 GT23 GT21(05Q) GS	
					GT15-RS2-9P	GT27 GT25	
					GT10-C02H-6PT9P*2	GT21(03P 04P R4) GT21(03P 04P R2)	
			User preparing RS-232 connection diagram 6)	15m	- (Built into GOT)	GT21(04R) GT21(03P 04P R2)	

PLC			Connection cable		GOT		Number of connectable equipment
Model name	Multi-communication unit*2	Communication Type	Cable model Connection diagram number	Max. distance	Option device	Model	
KV-1000	KV-L20R, KV-L20V (port 2)	RS-422	GT09-C30R41101-5T(3m) GT09-C100R41101-5T(10m) GT09-C200R41101-5T(20m) GT09-C300R41101-5T(30m) or User preparing RS-422 connection diagram 1)	500m	- (Built into GT)	GT27 GT25 GT23 GT21(05Q) GS	1 GOT for 1 multi-communication unit
					GT15-RS4-9S	GT27 GT25	
					GT10-C02H-9SC	GT21(04R) GT21(03P 04P R4)	
			User preparing RS-422 connection diagram 2)	500m	- (Built into GT)	GT21(04R) GT21(03P 04P ETI/R4) GT21(03P 04P R4)	
		RS-485	User preparing RS-485 connection diagram 1)	500m	- (Built into GT)	GT27 GT25 GT23 GT21(05Q) GS	
					GT15-RS4-9S	GT27 GT25	
					GT10-C02H-9SC	GT21(04R) GT21(03P 04P R4)	
			User preparing RS-485 connection diagram 2)	500m	- (Built into GT)	GT21(04R) GT21(03P 04P ETI/R4) GT21(03P 04P R4)	

*1 The multi-communication unit is a product manufactured by KEYENCE CORPORATION.
For details of the product, contact KEYENCE CORPORATION.

*2 When a GT10-C02H-6PT9P unit of the sub version A or B is used, do not ground the case of the D-sub (9-pin) connector.

6.2.4 Connecting to KV-700

■1. When connecting to PLC

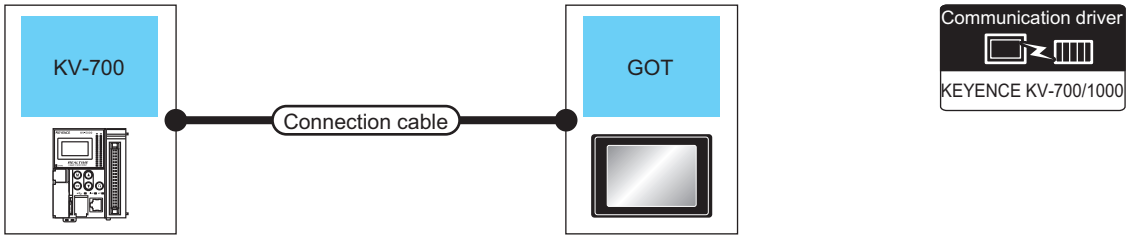

PLC		Connection cable			GOT		Number of connectable equipment
Model name	Communication Type	Cable model Connection diagram number	Conversion connector*1	Max. distance	Option device	Model	
KV-700	RS-232	GT09-C30R21101-6P or User preparing RS-232 connection diagram 1)	-	15m	- (Built into GOT)	GT27 GT25 GT23 GT21(05Q) GS	1 GOT for 1 PLC
					GT15-RS2-9P	GT27 GT25	
					GT10-C02H-6PT9P*2	GT21(04R) GT21(03P 04P R4) GT21(03P 04P R2)	
		User preparing RS-232 connection diagram 4)	-	15m	- (Built into GOT)	GT21(04R) GT21(03P 04P R2)	
		OP-26487*1	OP-26486	2.5m	- (Built into GOT)	GT27 GT25 GT23 GT21(05Q) GS	
					GT15-RS2-9P	GT27 GT25	
					GT10-C02H-6PT9P*2	GT21(03P 04P R4) GT21(03P 04P R2)	

*1 The cable, conversion connector, and multi-communication unit are products manufactured by KEYENCE CORPORATION. For details of the product, contact KEYENCE CORPORATION.

*2 When a GT10-C02H-6PT9P unit of the sub version A or B is used, do not ground the case of the D-sub (9-pin) connector.

■2. When connecting to multi-communication unit

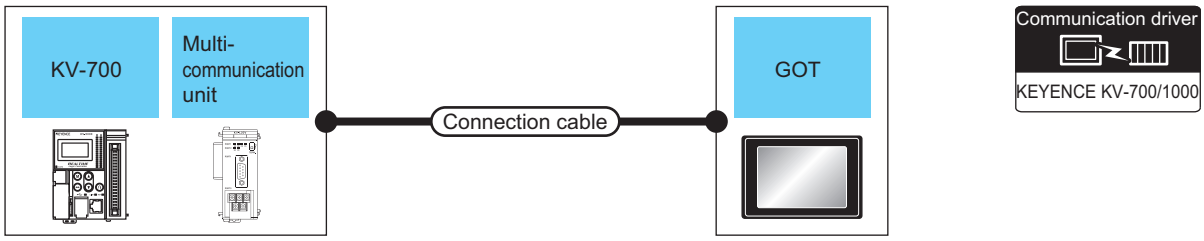

PLC			Connection cable		GOT		Number of connectable equipment
Model name	Multi-communication unit*2	Communication Type	Cable model Connection diagram number	Max. distance	Option device	Model	
KV-700	KV-L20R, KV-L20, KV-L20V (port 1)	RS-232	GT09-C30R21102-9S(3m) or User preparing RS-232 connection diagram 2)	15m	- (Built into GOT)	GT27 GT25 GT23 GT21(05Q) GS	1 GOT for 1 multi-communication unit
					GT15-RS2-9P	GT27 GT25	
					GT10-C02H-6PT9P*2	GT21(03P 04P R4) GT21(03P 04P R2)	
			User preparing RS-232 connection diagram 5)	15m	- (Built into GOT)	GT21(04R) GT21(03P 04P R2)	
	KV-L20R, KV-L20, KV-L20V (port 2)	RS-232	GT09-C30R21103-3T(3m) or User preparing RS-232 connection diagram 3)	15m	- (Built into GOT)	GT27 GT25 GT23 GT21(05Q) GS	
					GT15-RS2-9P	GT27 GT25	
					GT10-C02H-6PT9P*2	GT21(03P 04P R4) GT21(03P 04P R2)	
			User preparing RS-232 connection diagram 6)	15m	- (Built into GOT)	GT21(04R) GT21(03P 04P R2)	

PLC			Connection cable		GOT		Number of connectable equipment
Model name	Multi-communication unit*2	Communication Type	Cable model Connection diagram number	Max. distance	Option device	Model	
KV-700	KV-L20R, KV-L20, KV-L20V (port 2)	RS-422	GT09-C30R41101-5T(3m) GT09-C100R41101-5T(10m) GT09-C200R41101-5T(20m) GT09-C300R41101-5T(30m) or User preparing RS-422 connection diagram 1)	500m	- (Built into GOT)	GT27 GT25 GT23 GT21(05Q) GS	1 GOT for 1 multi-communication unit
					GT15-RS4-9S	GT27 GT25	
					GT10-C02H-9SC	GT21(04R) GT21(03P 04P R4)	
			User preparing RS-422 connection diagram 2)	500m	- (Built into GOT)	GT21(04R) GT21(03P 04P ET/R4) GT21(03P 04P R4)	
	KV-L20R, KV-L20, KV-L20V (port 2)	RS-485	User preparing RS-485 connection diagram 1)	500m	- (Built into GOT)	GT27 GT25 GT23 GT21(05Q) GS	
					GT15-RS4-9S	GT27 GT25	
					GT10-C02H-9SC	GT21(04R) GT21(03P 04P R4)	
			User preparing RS-485 connection diagram 2)	500m	- (Built into GOT)	GT21(04R) GT21(03P 04P ET/R4) GT21(03P 04P R4)	

*1 The conversion connector and multi-communication unit are products manufactured by KEYENCE CORPORATION. For details of the product, contact KEYENCE CORPORATION.

*2 When a GT10-C02H-6PT9P unit of the sub version A or B is used, do not ground the case of the D-sub (9-pin) connector.

6.2.5 Connection Diagram

The following diagram shows the connection between the GOT and the PLC.

■1. RS-232 cable

(1) Connection diagram

(a) RS-232 connection diagram 1)

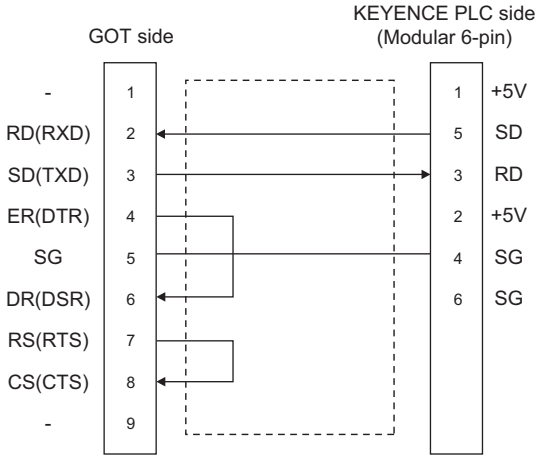

(b) RS-232 connection diagram 2)

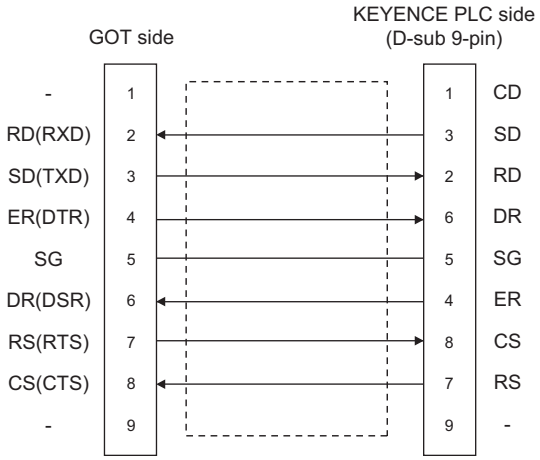

(c) RS-232 connection diagram 3)

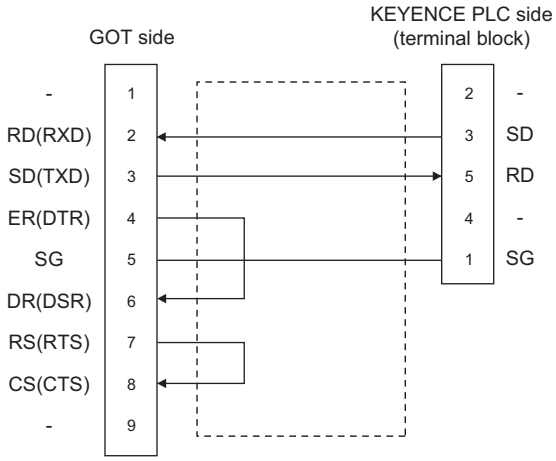

(d) RS-232 connection diagram 4)

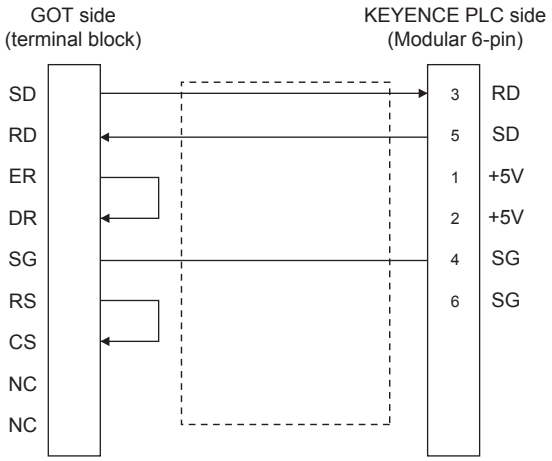

(e) RS-232 connection diagram 5)

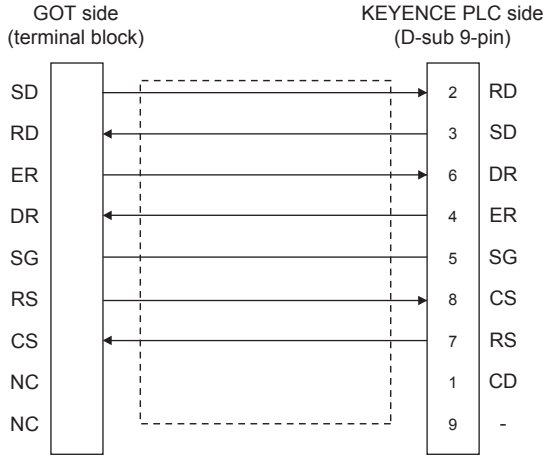

(f) RS-232 connection diagram 6)

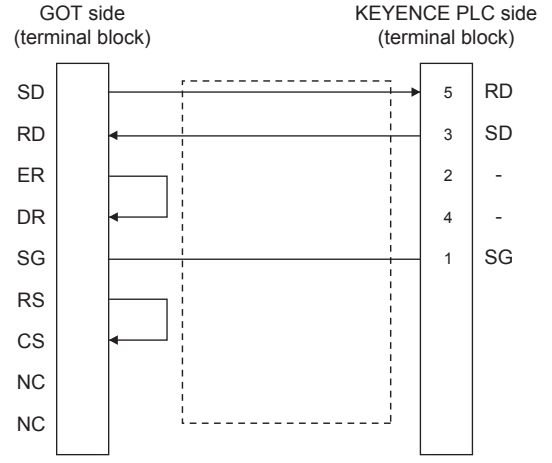

(2) Precaution when preparing a cable

(a) Cable length

The length of the RS-232 cable must be within 15m.

(b) GOT side connector

For the GOT side connector, refer to the following.

➠ 1.4.1 GOT connector specifications

(c) KEYENCE PLC side connector

Use the connector compatible with the KEYENCE PLC side module.
For details, refer to the KEYENCE PLC user's manual.

■2. RS-422 cable

(1) Connection diagram

(a) RS-422 connection diagram 1)

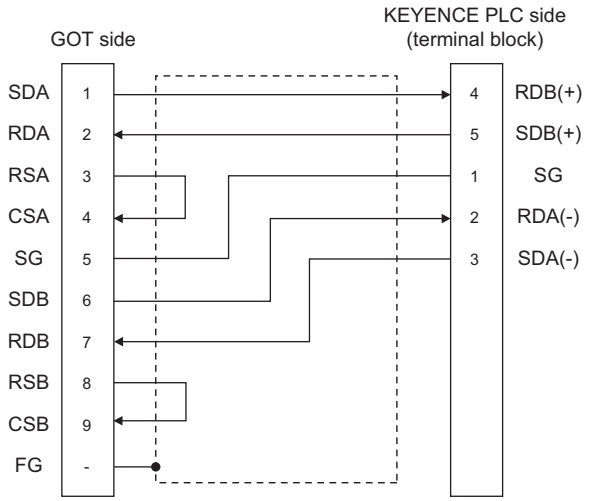

(b) RS-422 connection diagram 2)

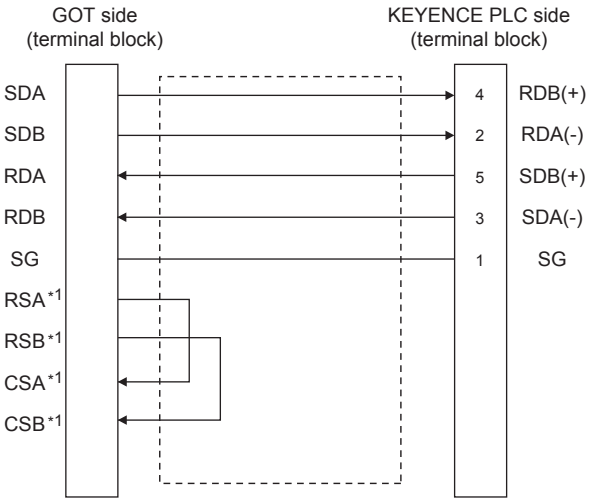

*1 The signals RSA, RSB, CSA, and CSB are not provided for GT 2 03P 04P ET/R4.Return connection is not required.

(2) Precautions when preparing a cable

(a) Cable length

The length of the RS-422 cable must be 500m or less

(b) GOT side connector

For the GOT side connector, refer to the following.

➠ 1.4.1 GOT connector specifications

(c) KEYENCE PLC side connector

Use the connector compatible with the KEYENCE PLC side module.
For details, refer to the KEYENCE PLC user's manual.

(3) Connecting terminating resistors

(a) GOT side

When connecting a KEYENCE PLC to the GOT, a terminating resistor must be connected to the GOT.

- For GT27, GT25, GT23
  Set the terminating resistor setting switch of the GOT main unit to "Disable".
- For GT21
  Set the terminating resistor selector to "330Ω".

For the procedure to set the terminating resistor, refer to the following.

➠ 1.4.3 Terminating resistors of GOT

■3. RS-485 cable

(1) Connection diagram

(a) RS-485 connection diagram 1)

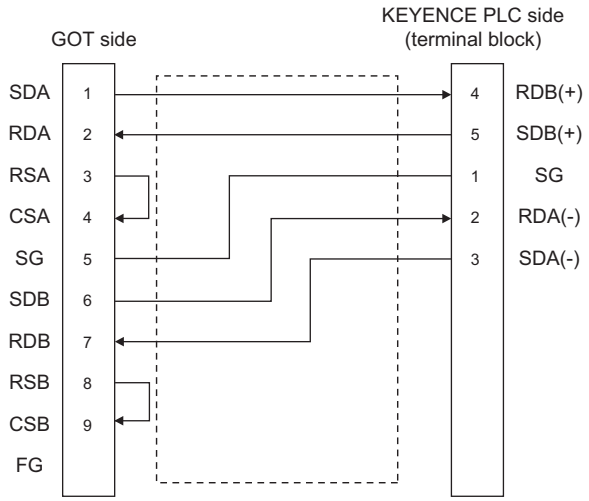

(b) RS-485 connection diagram 2)

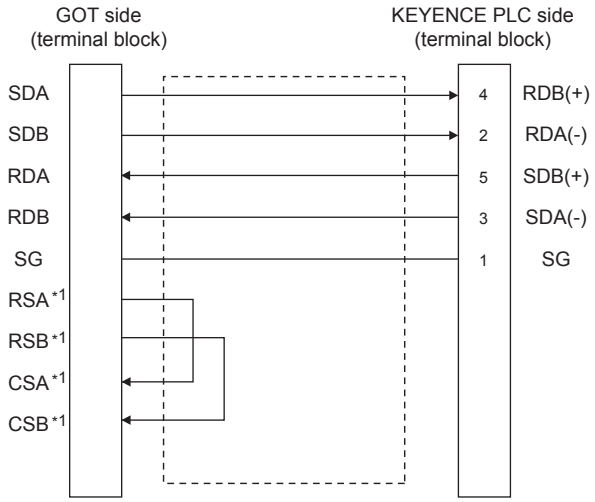

*1 The signals RSA, RSB, CSA, and CSB are not provided for GT21 (03P/04P/ET/R4). Return connection is not required.

(2) Precautions when preparing a cable

(a) Cable length

The length of the RS-485 cable must be 500m or less

(b) GOT side connector

For the GOT side connector, refer to the following.

➠ 1.4.1 GOT connector specifications

(c) KEYENCE PLC side connector

Use the connector compatible with the KEYENCE PLC side module.
For details, refer to the KEYENCE PLC user's manual.

(3) Connecting terminating resistors

(a) GOT

- For GT27, GT25, GT23
  Set the terminating resistor setting switch of the GOT main unit to "Enable".
- For GT21
  Set the terminating resistor selector to "330Ω".

For the procedure to set the terminating resistor, refer to the following.

➠ 1.4.3 Terminating resistors of GOT

(b) KEYENCE PLC

Connect the terminating resistor on the KEYENCE PLC side when connecting a GOT to a KEYENCE PLC.

➠ 6.2.7 PLC Side Setting

6.2.6 GOT Side Settings

■1. Setting communication interface (Communication settings)

Set the channel of the equipment to be connected to the GOT.

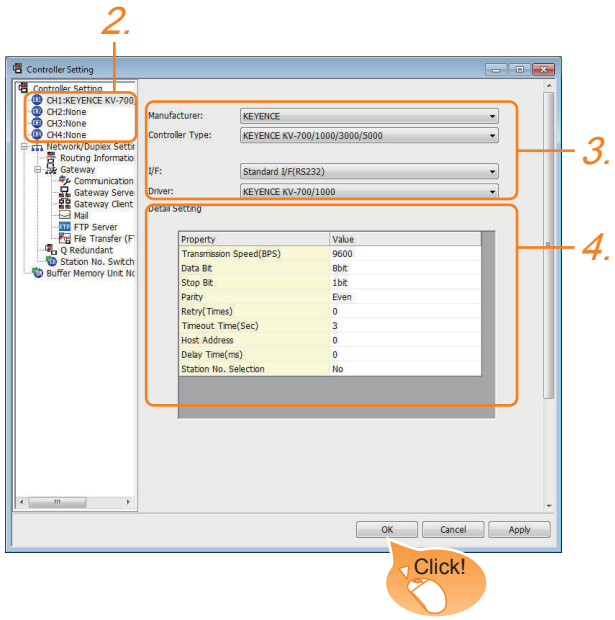

Step 1. Select [Common] → [Controller Setting] from the menu.

Step 2. The Controller Setting window is displayed. Select the channel to be used from the list menu.

Step 3. Set the following items.

- Manufacturer: KEYENCE
- Controller Type: KEYENCE KV-700/1000/3000/5000
- I/F: Interface to be used
- Driver: KEYENCE KV-700/1000

Step 4. The detailed setting is displayed after Manufacturer, Controller Type, I/F, and Driver are set. Make the settings according to the usage environment.

➠ ■2. Communication detail settings

Click the [OK] button when settings are completed.

POINT

The settings of connecting equipment can be confirmed in [I/F Communication Setting]. For details, refer to the following.

➠ 1.1.2 I/F communication setting

■2. Communication detail settings

Make the settings according to the usage environment.

Property	Value
Transmission Speed(BPS)	9600
Data Bit	8 bit
Stop Bit	1 bit
Parity	Even
Retry(Times)	0
Timeout Time(Sec)	3
Host Address	0
Delay Time(ms)	0
Station No. Selection	No

Item	Contents	Range
Transmission Speed	Set this item when change the transmission speed used for communication with the connected equipment. (Default: 9600bps)	9600bps, 19200bps, 38400bps, 57600bps, 115200bps
Data Bit	Set this item when change the data length used for communication with the connected equipment. (Default: 8bits)	7bits/8bits
Stop Bit	Specify the stop bit length for communications. (Default: 1bit)	1bit/2bits
Parity	Specify whether or not to perform a parity check, and how it is performed during communication. (Default: Even)	None Even Odd
Retry	Set the number of retries to be performed when a communication error occurs. (Default: 0time)	0 to 5times
Timeout Time	Set the time period for a communication to time out. (Default: 3sec)	1 to 30sec
Host Address	Specify the host address (station No. of the PLC to which the GOT is connected) in the network of the GOT. (Default: 0)	0 to 9
Delay Time	Set this item to adjust the transmission timing of the communication request from the GOT. (Default: 0ms)	0 to 300ms
Station No. Selection	Specify whether to use the station No. during communication. (Default: None)	Yes or No

POINT

(1) Communication interface setting by the Utility
The communication interface setting can be changed on the Utility's [Communication Settings] after writing [Communication Settings] of project data.
For details on the Utility, refer to the following manual.

➠ GOT2000 Series User's Manual (Utility)

(2) Precedence in communication settings
When settings are made by GT Designer3 or the Utility, the latest setting is effective.

6.2.7 PLC Side Setting

POINT

KEYENCE PLC

For details of KEYENCE PLC, refer to the following manual.

➠ KEYENCE PLC user's Manual

Model name		Reference
PLC CPU	KV-3000	6 - 21
	KV-1000	6 - 21
	KV-700	6 - 21
Multi-communication unit	KV-L20R	6 - 21
	KV-L20	
	KV-L20V	

■1. Connecting KV-3000,KV-1000

Setting items	Set value
Transmission Speed	9600 to 115200 bps*1
Data bit	8bits
Parity bit	Even
Stop bit	1bit

*1 There is no transmission speed setting on the PLC side.The transmission speed of the PLC side is automatically adjusted to that of the GOT side.

■2. Connecting to KV-700

Setting items	Set value
Transmission Speed	9600bps
Data bit	8bits
Parity bit	Even
Stop bit	1bit

■3. Connecting to KV-L20R, KV-L20,.KV-L20V

(1) Communication settings

Setting items	Set value
Communication mode	KV mode (Upper link)
Transmission speed*1*2	4800bps, 9600bps, 19200bps, 38400bps, 57600bps, 115200bps
Data bit	8bits
Parity bit	Even
Stop bit	1bit
Station No.*3	0 to 9

*1 Only transmission speeds available on the GOT side are shown.

*2 The transmission speed setting must be consistent with that of the GOT side.
For the transmission speed setting on the GOT side, refer to the following.

➠ Setting communication interface (Communication settings)

*3 Set the station No. according to the host address on the GOT side.
For the Host Address setting on the GOT side, refer to the following.

➠ Setting communication interface (Communication settings)

(2) Setting DIP switches

Set the DIP switches.

(a) When using KV-L20R or KV-L20

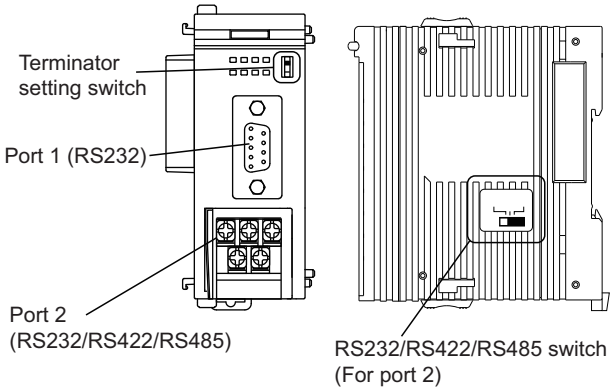

- RS232/RS422/RS485 switch (For port 2)
  (For KV-L20R)

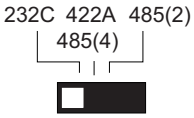

Settings	
For RS-232 communication	For RS-422 communication
RS-232C	RS-422A 485(4)

(For KV-L20)

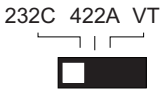

Settings	
For RS-232 communication	For RS-422 communication
RS-232C	RS-422A

- Terminator setting switch
  Set when carrying out RS-422 communication.

Settings	
When multi-communication unit is a terminal	When multi-communication unit is not a terminal
ON	OFF

(b) When using KV-L20

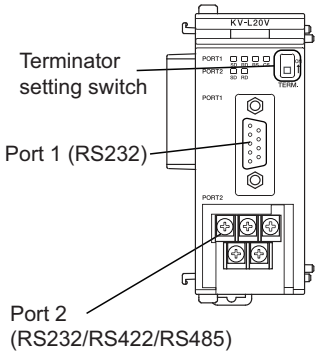

- Terminator setting switch
  Set when carrying out RS-422 communication.

Settings	
When multi-communication unit is a terminal	When multi-communication unit is not a terminal
ON	OFF

6.3 Ethernet Connection

6.3.1 Connecting to KV-700/1000/3000/5000/5500

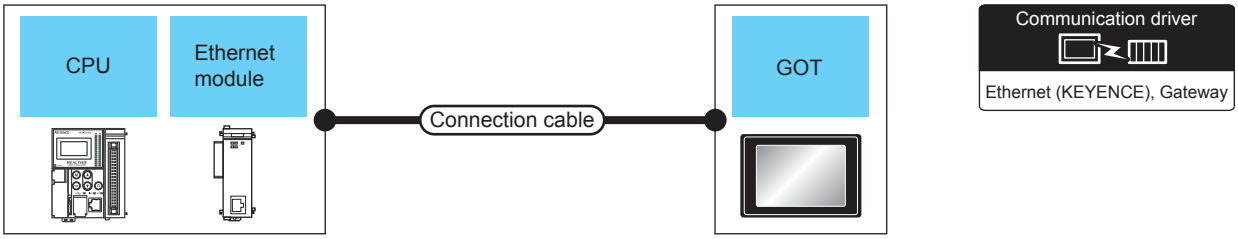

PLC Series	Ethernet module*3	Connection cable Cable model	Maximum segment length*2	GOT Option device	Model*3	Number of connectable equipment
KV-5000	-	Twisted pair cable • 10BASE-T Shielded twisted pair cable (STP) or unshielded twisted pair cable (UTP): Category 3, 4, and 5 • 100BASE-TX Shielded twisted pair cable (STP): Category 5 and 5e	100m	- (Built into GOT)	GT27 GT25 GT23 GT21 GT21 GS	When PLC:GOT is N:1 The following shows the number of PLCs for 1 GOT <For GT27, GT25> TCP: 128 or less UDP: 128 or less <For GT21> TCP: 4 or less UDP: 4 or less When PLC:GOT is 1:N The following shows the number of GOTs for 1 PLC TCP: 15 or less UDP: 1 or less
				GT25-J71E71-100	GT27 GT25	
KV-700 KV-1000 KV-3000 KV-5000 KV-5500	KV-LE20V KV-LE21V		100m	- (Built into GOT)	GT27 GT25 GT23 GT21 GT21 GS	
				GT25-J71E71-100	GT27 GT25	

*1 The destination connected with the twisted pair cable varies with the configuration of the applicable Ethernet network system.
Connect to the Ethernet module, hub, transceiver or other system equipment corresponding to the applicable Ethernet network system.
Use cables, connectors, and hubs that meet the IEEE802.3 10BASE-T/100BASE-TX standards.

*2 A length between a hub and a node.
The maximum distance differs depending on the Ethernet device to be used.
The following shows the number of the connectable nodes when a repeater hub is used.
- 10BASE-T: Max. 4 nodes for a cascade connection (500m)
- 100BASE-TX: Max. 2 nodes for a cascade connection (205m)

When switching hubs are used, the cascade connection between the switching hubs has no logical limit for the number of cascades.
For the limit, contact the switching hub manufacturer.

*3 Product manufactured by KEYENCE CORPORATION. For details of the product, contact KEYENCE CORPORATION.

6.3.2 GOT side settings

■1. Setting communication interface (Communication settings)

Set the channel of the connected equipment.

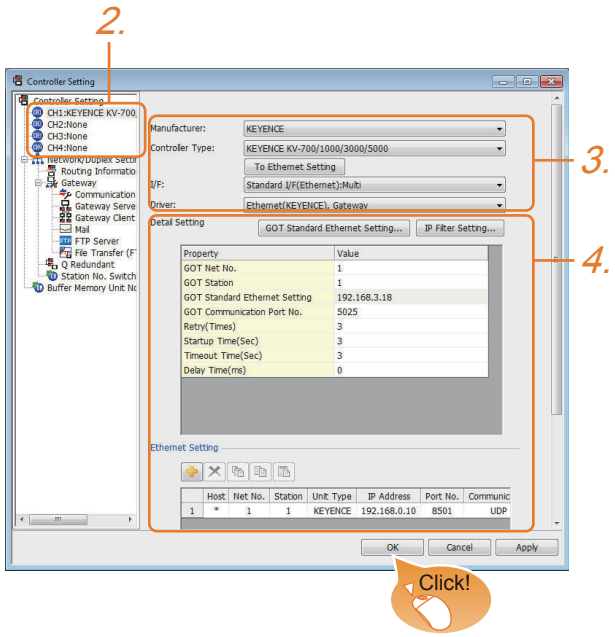

Step 1. Select [Common] → [Controller Setting] from the menu.

Step 2. The Controller Setting window is displayed. Select the channel to be used from the list menu.

Step 3. Set the following items.

- Manufacturer: KEYENCE
- Controller Type: KEYENCE KV-700/1000/3000/5000
- I/F: Interface to be used
- Driver: Ethernet(KEYENCE), Gateway

Step 4. The detailed setting is displayed after Manufacturer, Controller Type, I/F, and Driver are set. Make the settings according to the usage environment.

➠ 6.3.2 ■2. Communication detail settings

Click the [OK] button when settings are completed.

POINT

The settings of connecting equipment can be confirmed in [I/F Communication Setting]. For details, refer to the following.

➠ 1.1.2 I/F communication setting

■2. Communication detail settings

Make the settings according to the usage environment.

Property	Value
GOT Net No.	1
GOT Station	1
GOT Standard Ethernet Setting	192.168.3.18
GOT Communication Port No.	5025
Retry(Times)	3
Startup Time(Sec)	3
Timeout Time(Sec)	3
Delay Time(ms)	0

Item	Description	Range
GOT Net No.	Set the network No. of the GOT. (Default: 1)	1 to 239
GOT Station*1	Set the station No. of the GOT. (Default: 1)	1 to 254
GOT Standard Ethernet Setting	Set the GOT IP address, subnet mask, default gateway, peripheral S/W communication port No., transparent port No.	➠ ■3. GOT Standard Ethernet setting
GOT Communication Port No.	Set the GOT port No. for the connection with the Ethernet module. (Default: 5025)	1024 to 5010, 5014 to 65534 (Except for 5011, 5012, 5013, and 49153 to 49170)
Retry	Set the number of retries to be performed when a communication timeout occurs. When receiving no response after retries, the communication times out. (Default: 3times)	0 to 5times
Startup Time	Specify the time period from the GOT startup until GOT starts the communication with the PLC CPU. (Default: 3sec)	3 to 255sec
Timeout Time	Set the time period for a communication to time out. (Default: 3sec)	1 to 90sec
Delay Time	Set the delay time for reducing the load of the network/destination PLC. (Default: 0ms)	0 to 10000 (×10ms)

*1 Each of [GOT Station] set in the communication detail setting and [Station] set in the Ethernet setting must be set to different station numbers.

➠ ■4. Ethernet setting

■3. GOT Standard Ethernet setting

The GOT can be connected to a different network by using the following interface.

- Standard Ethernet interface:
  Set the [GOT IP Address] and [Subnet Mask] in the GOT built-in Ethernet interface.
- Extension Ethernet interface:
  Set the [GOT Extension IP Address] and [Extension Subnet Mask] in the Ethernet interface for the Ethernet communication module.
  BootOS Version Z or higher is required to use the extension Ethernet Interface.
  For details on writing the BootOS, refer to the following manual.

➠ GT Designer3 (GOT2000) Screen Design Manual

The standard Ethernet interface and extension Ethernet interface use the same [Default Gateway].

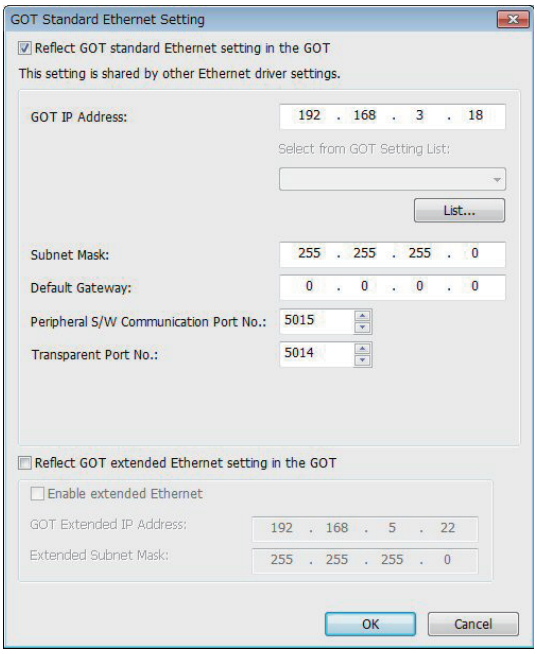

Item	Description	Range
The GOT standard Ethernet settings are applied on the GOT unit.	The standard Ethernet settings are applied on GOT.	-
GOT IP Address	Set the IP address of the Standard Ethernet interface. (Default: 192.168.3.18)	0.0.0.0 to 255.255.255.255
Select from GOT Setting List	Select the set GOT in the [GOT Setting List] dialog. ➠ GT Designer3(GOT2000) Help	-
Subnet Mask	Set the subnet mask for the sub network. (Only for connection via router) If the sub network is not used, the default value is set. (Default: 255.255.255.0)	0.0.0.0 to 255.255.255.255
Default Gateway	Set the router address of the default gateway where the GOT is connected. (Only for connection via router) (Default: 0.0.0.0)	0.0.0.0 to 255.255.255.255
Peripheral S/W Communication Port No.	Set the GOT port No. for the communication with the peripheral S/W. (Default: 5015)	1024 to 65534 (Except for 5011 to 5013, 49153 to 49170)
Transparent Port No.	Set the GOT port No. for the transparent function. (Default: 5014)	1024 to 65534(Except for 5011 to 5013,49153 to 49170)
The GOT extension Ethernet settings are applied on the GOT unit.	The extension Ethernet settings are applied on GOT.	-
Enabling the extension Ethernet	Enable the extension Ethernet settings.An error message will appear if all of the [Extension I/F Setting] in the [I/F communication setting] dialog are used. Always set on of the [Extension I/F Setting] to [Not used]. ➠ 1.1.2 I/F communication setting	-
GOT Extension IP Address	Set the IP address of the Extension Ethernet. (Default: 192.168.5.22)	0.0.0.0 to 255.255.255.255
Extension Subnet Mask	Set the subnet mask for the sub network. (Only for connection via router) If the sub network is not used, the default value is set. (Default: 255.255.255.0)	0.0.0.0 to 255.255.255.255

POINT

GOT IP address setting

For GOT IP address of each Ethernet setting, set a value that network system is different from each other.

(Example of setting)

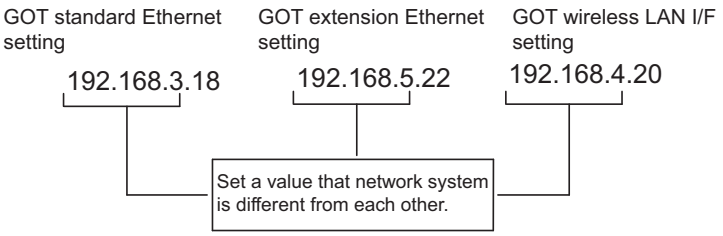

■4. Ethernet setting

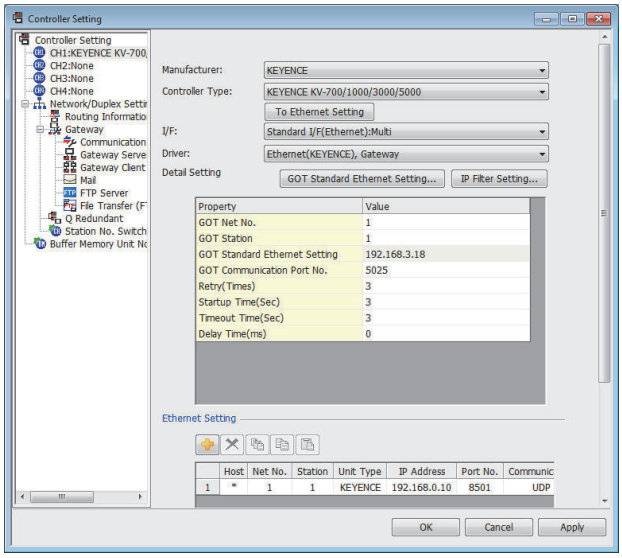

Item	Description	Set value
Host	The host is displayed. (The host is indicated with an asterisk (*).)	-
N/W No.	Set the network No. of the connected Ethernet module. (Default: blank)	1 to 239
Station*1	Set the station No. of the connected Ethernet module. (Default: blank)	1 to 254
Type	KEYENCE (fixed)	KEYENCE (fixed)
IP Address	Set the IP address of the connected Ethernet module. (Default: 192.168.0.10)	PLC side IP address
Port No.	Set the port No. of the connected Ethernet module. (Default: 8501)	PLC side port No.
Communication	UDP, TCP (Default: UDP)	Adjust the settings with the PLC settings.

*1 Each of [GOT Station] set in the communication detail setting and [Station] set in the Ethernet setting must be set to different station numbers.

➠ ■2. Communication detail settings

POINT

(1) Communication interface setting by the Utility
The communication interface setting can be changed on the Utility's [Communication setting] after writing [Communication Settings] of project data.
For details on the Utility, refer to the following manual.

➠ GOT2000 Series User's Manual (Utility)

(2) Precedence in communication settings
When settings are made by GT Designer3 or the Utility, the latest setting is effective.

POINT

Ethernet setting for GT21 and GS

(1) Effective range of the Ethernet setting
Only [1] to [4] of the Ethernet setting can be used for the GT21 and the GS. Even though [5] or later of the Ethernet setting is written to the GT21 and the GS, the setting is disabled on the GT21 and the GS side.

(2) Range of the host station setting
Set a host station within the range of [1] to [4] of the Ethernet setting.

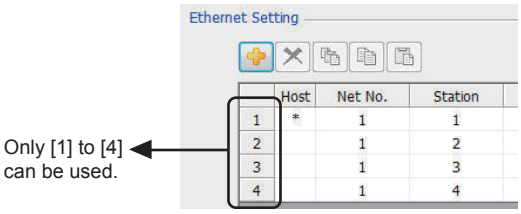

■5. IP Filter Setting

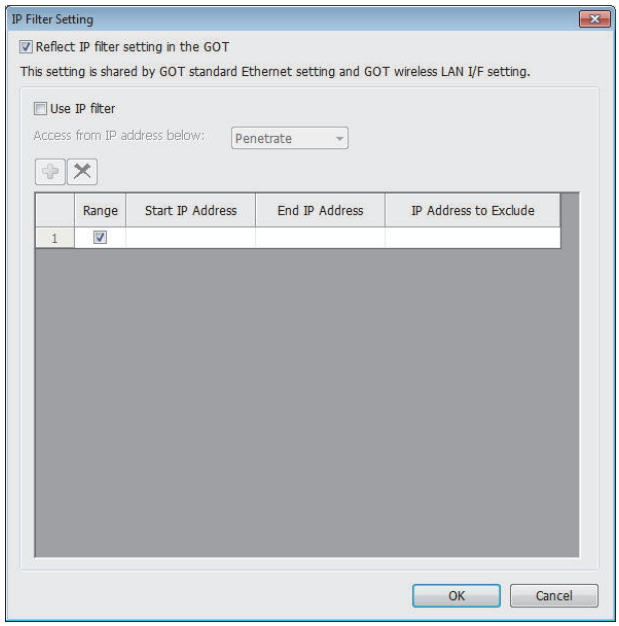

To improve security, the GOT 2000 series supports the IP Filter Setting.
For details on the IP Filter Setting, refer to the following manual.

➠ GT Designer3 (GOT2000) Screen Design Manual

6.3.3 PLC side setting

POINT

KEYENCE PLC

For details of KEYENCE PLC, refer to the following manual.

➠ KEYENCE PLC user's Manual

■1. KV-LE21V/KV-LE21V setting

Set the IP address and port No. by the unit editor of KV STUDIO.

Item	Description	Range
Communication mode	Ethernet	-
IP address*1	Set the IP address.	0.0.0.0 to 255.255.255.255
Port No.*1 (Host link)	Set the port No.	256 to 65534

*1 Adjust the settings with the Ethernet settings of the GOT side.

➠ ■4. Ethernet setting

6.4 Device Range that Can Be Set

The device ranges of controller that can be used for GOT are as follows.
Note that the device ranges in the following tables are the maximum values that can be set in GT Designer3.
The device specifications of controllers may differ depending on the models, even though belonging to the same series.
Please make the setting according to the specifications of the controller actually used.
When a non-existent device or a device number outside the range is set, other objects with correct device settings may not be monitored.

■1. Setting item

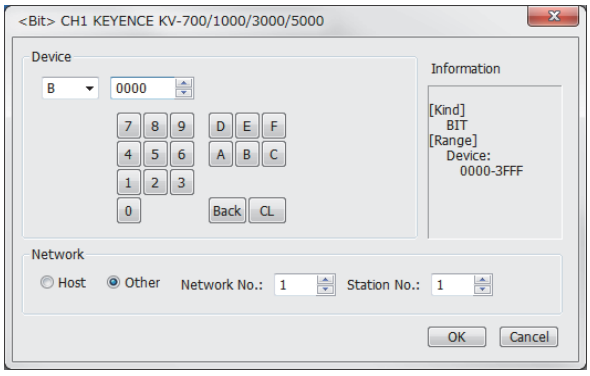

Item	Description	
Device	Set the device name, device number, and bit number. The bit number can be set only when specifying the bit of word device.	
Information	Displays the device type and its setting range selected in [Device].	
Network	Set the station number of the controller to be monitored.	
	Host	Select this item for monitoring the host controller.
	Other	Select this item for monitoring other controllers. After selecting, set the station number of the controller to be monitored. NWNo.: Set the network No. Station No.: Set the station No.

POINT

Device settings of KEYENCE PLC

(1) Setting setting procedure for relays (...), internal auxiliary relays (MR), latch relays (LR) and control relays(CR).
Make settings for status by a channel number and a bit position.

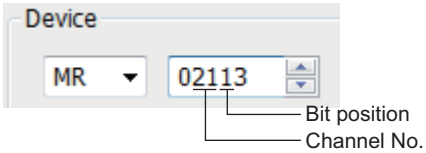

6.4.1 KV-700/1000/3000/5000

Device name		Setting range	Device No. representation
Bit device	Relay (...)	..00000 to ..99915	Decimal
	Internal auxiliary relay (MR)	MR00000 to MR99915	
	Latch relay (LR)	LR00000 to LR99915	
	Control relay (CR)	CR0000 to CR3915	
	Link relay (B)*2	B0000 to B3FFF	Hexadecimal
	Work relay (VB)*2	VB0000 to VB3FFF	
	Timer (Contact) (T)*1*2	T0000 to T3999	Decimal
	Counter (Contact) (C)*1*2	C0000 to C3999	
	High-speed counter comparator (Contact) (CTC)*2*3*6	CTC0 to CTC3	
	The bit specification of the word device (except Control memory, Temporary data memory, Work memory, Index register)	Setting range of each word device	-
Word device	Data memory (DM)	DM00000 to DM65534	Decimal
	Extension data memory (EM)	EM00000 to EM65534	
	Extension data memory 2 (FM)	FM00000 to FM32767	
	File register (ZF)	ZF000000 to ZF032767 ZF032768 to ZF065535 ZF065536 to ZF098303 ZF098304 to ZF131071	
	Link register (W)	W0000 to W3FFF	Hexadecimal
	Control memory (CM)	CM00000 to CM11998	Decimal
	Temporary data memory (TM)	TM000 to TM511	
	Work memory (VM)	VM00000 to VM59999	
	Index register (Z)*7	Z1 to Z12	
	The word specification of the bit device (except Timer (Contact), Counter (Contact), High-speed counter comparator (Contact))	Setting range of each bit device	-
Double word device	Timer (Current value) (TC)*2*4	TC0000 to TC3999	-
	Timer (Set value) (TS)*2*4	TS0000 to TS3999	
	Counter (Current value) (CC)*2*4	CC0000 to CC3999	
	Counter (Set value) (CS)*2*4	CS0000 to CS3999	
	High-speed counter (Current value) (CTH)*2*4	CTH0 to CTH1	
	High-speed counter comparator (Set value) (CTC)*2*4	CTC0 to CTC3	
	Index register (DZ)	DZ01 to DZ12	
	Digital trimmer (TRM)*4*5	TRM0 to TRM7	

*1 Monitoring or writing is not possible in the continuous device designation mode.
*2 Monitoring by GOT is possible only when a device is used in the sequence program.
*3 When writing, only the reset of the contact is possible.
*4 Only 32-bit (2-word) designation is allowed.
*5 Only reading is possible.
*6 Monitoring or writing to continuous devices is not possible.
*7 With KV-3000 and KV-5000, Z devices cannot be specified as 32-bit (2 words) data. Use DZ devices.

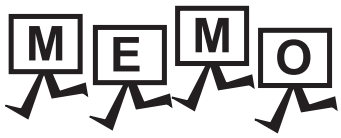
MEMO

7. CONNECTION TO KOYO EI PLC

7.1 Connectable Model List . . . . . 7 - 2
7.2 System Configuration . . . . . 7 - 3
7.3 Connection Diagram. . . . . 7 - 17
7.4 GOT Side Settings . . . . . 7 - 23
7.5 PLC Side Setting. . . . . 7 - 25
7.6 Device Range that Can Be Set. . . . . 7 - 33
7.7 Precautions . . . . . 7 - 35

7. CONNECTION TO KOYO EI PLC

7.1 Connectable Model List

The following table shows the connectable models.

Series	Model name	Clock*1	Communication Type	Connectable GOT	Refer to
KOSTAC SU Series	SU-5E	×	RS232 RS422	GT27 GT25 GT23	7.2.1
	SU-6B	○			
	SU-5M	○	RS232 RS422	GT27 GT25 GT23	7.2.2
	SU-6M	○			
DirectLOGIC 05 Series	D0-05AA	×	RS232 RS422	GT27 GT25 GT23	7.2.3
	D0-05AD	×			
	D0-05AR	×			
	D0-05DA	×			
	D0-05DD	×			
	D0-05DD-D	×			
	D0-05DR	×			
	D0-05DR-D	×			
DirectLOGIC 06 Series	D0-06DD1	○	RS232 RS422	GT27 GT25 GT23	7.2.4
	D0-06DD2	○			
	D0-06DR	○			
	D0-06DA	○			
	D0-06AR	○			
	D0-06AA	○			
	D0-06DD1-D	○			
	D0-06DD2-D	○			
	D0-06DR-D	○			
DirectLOGIC 205 Series	D2-240	○	RS232 RS422	GT27 GT25 GT23	7.2.5
	D2-250-1	○			
	D2-260	○			
PZ series	PZ3	×	RS232 RS422	GT27 GT25 GT23	7.2.6

*1 The GOT can only read the clock data.In the clock setting, though the adjust is available, the broadcast is not available.

7.2.1 Connecting to SU-5E or SU-6B

■1. When connecting to one PLC

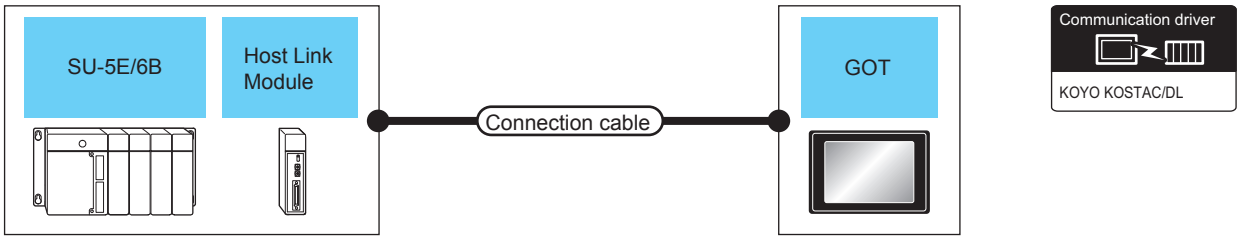

PLC			Connection cable		GOT		Number of connectable equipment
Model name	Host link module*1	Communication Type	Cable model Connection diagram number	Max. distance	Option device	Model	
SU-5E/6B (general communication port)	-	RS-232	User preparing RS-232 connection diagram 1)	15m	- (Built into GOT)	GT27 GT25 GT23	1 PLC for 1 GOT
					GT15-RS2-9P	GT27 GT25	
		RS-422	User preparing RS-422 connection diagram 1)	1000m	- (Built into GOT)	GT27 GT25 GT23	
					GT15-RS4-9S	GT27 GT25	
SU-5E/6B	U-01DM	RS-232	User preparing RS-232 connection diagram 1)	15m	- (Built into GOT)	GT27 GT25 GT23	1 host link module for 1 GOT
					GT15-RS2-9P	GT27 GT25	
		RS-422	User preparing RS-422 connection diagram 3)	1200m	- (Built into GOT)	GT27 GT25 GT23	
					GT15-RS4-9S	GT27 GT25	

*1 The data communications module is manufactured by KOYO ELECTRONICS INDUSTRIES CO., LTD.For details of the product, contact KOYO ELECTRONICS INDUSTRIES CO., LTD.

■2. When connecting to multiple PLCs

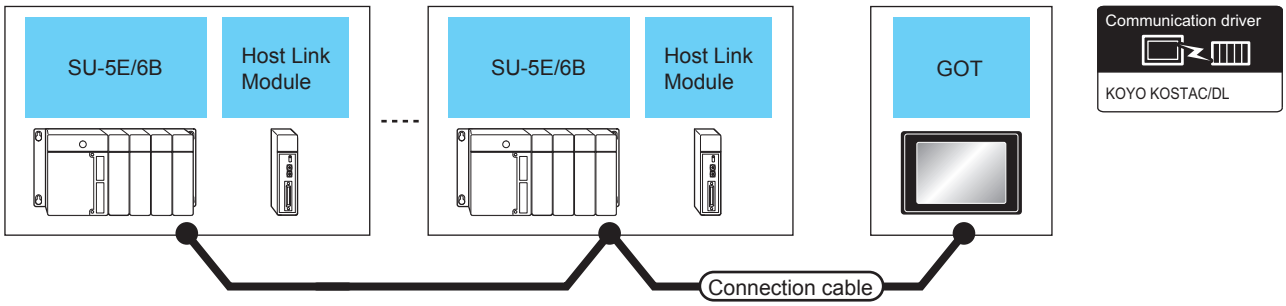

PLC			Connection cable		GOT		Number of connectable equipment
Model name	Host link module*1	Communication Type	Cable model Connection diagram number	Max. distance	Option device	Model	
SU-5E/6B	-	RS-422	User preparing RS-422 connection diagram 5)	1000m	- (Built into GOT)	GT27 GT25 GT23	90 PLCs for 1 GOT*2
					GT15-RS4-9S	GT27 GT25	
SU-5E/6B	U-01DM	RS-422	User preparing RS-422 connection diagram 7)	1200m	- (Built into GOT)	GT27 GT25 GT23	90 host link module for 1 GOT*2
					GT15-RS4-9S	GT27 GT25	

*1 The data communications module is manufactured by KOYO ELECTRONICS INDUSTRIES CO., LTD.For details of the product, contact KOYO ELECTRONICS INDUSTRIES CO., LTD.

*2 When the number of links exceeds 30, use a transmission line conversion unit D-01CV per 30 links.
For details, refer to the following manual.

➠ KOYO EI PLC user's Manual

7.2.2 Connecting to SU-5M or SU-6M

■1. When connecting to one PLC

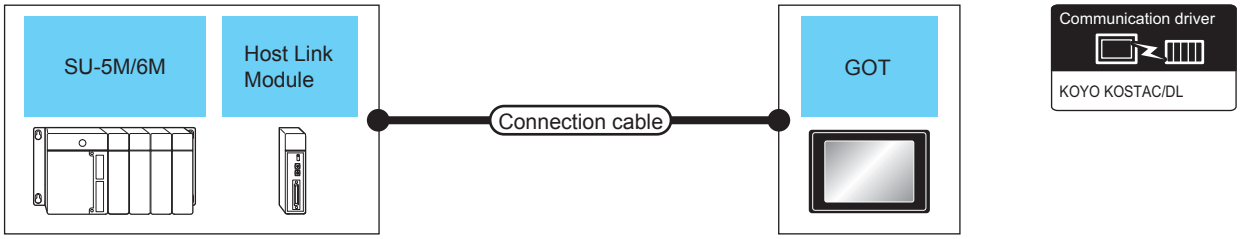

PLC			Connection cable		GOT		Number of connectable equipment
Model name	Host link module*1	Communication Type	Cable model Connection diagram number	Max. distance	Option device	Model	
SU-5M/6M (general communication port 1)	-	RS-232	User preparing RS-232 connection diagram 1)	15m	- (Built into GOT)	GT27 GT25 GT23	1 PLC for 1 GOT
					GT15-RS2-9P	GT27 GT25	
		RS-422	User preparing RS-422 connection diagram 1)	1000m	- (Built into GOT)	GT27 GT25 GT23	
					GT15-RS4-9S	GT27 GT25	
SU-5M/6M (general communication port 2)	-	RS-232	Z-20JP (Programmable connecting cable) + S-9CNS1(Conversion connector)*1	3m	- (Built into GOT)	GT27 GT25 GT23	
					GT15-RS2-9P	GT27 GT25	
SU-5M/6M (general communication port 3)	-	RS-422	User preparing RS-422 connection diagram 2)	1000m	- (Built into GOT)	GT27 GT25 GT23	
					GT15-RS4-9S	GT27 GT25	

PLC			Connection cable		GOT		Number of connectable equipment
Model name	Host link module*1	Communication Type	Cable model Connection diagram number	Max. distance	Option device	Model	
SU-5M/6M	U-01DM	RS-232	User preparing RS-232 connection diagram 1)	15m	- (Built into GOT)	GT27 GT25 GT23	1 host link module for 1 GOT
					GT15-RS2-9P	GT27 GT25	
		RS-422	User preparing RS-422 connection diagram 3)	1200m	- (Built into GOT)	GT27 GT25 GT23	
					GT15-RS4-9S	GT27 GT25	

*1 The programmable connecting cable and conversion connector are products manufactured by KOYO ELECTRONICS INDUSTRIES CO., LTD.
For details of the product, contact KOYO ELECTRONICS INDUSTRIES CO., LTD.

■2. When connecting to multiple PLCs

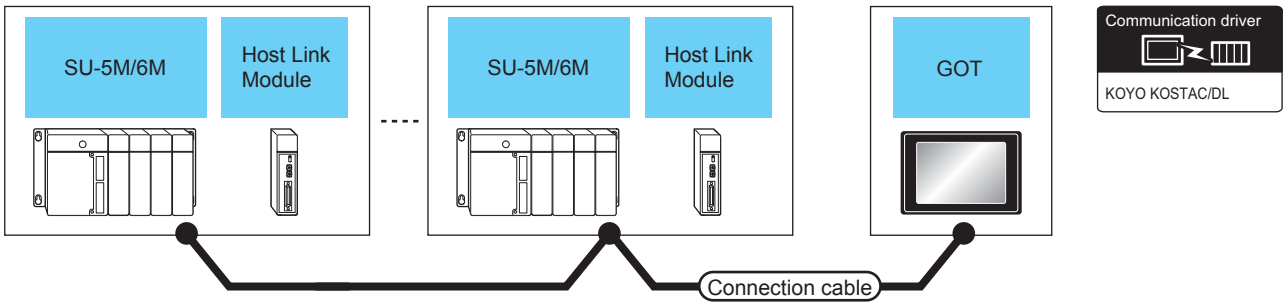

PLC			Connection cable		GOT		Number of connectable equipment
Model name	Host link module*1	Communication Type	Cable model Connection diagram number	Max. distance	Option device	Model	
SU-5M/6M (general communication port 1)	-	RS-422	User preparing RS-422 connection diagram 5)	1000m	- (Built into GOT)	GT27 GT25 GT23	90 PLCs for 1 GOT*2
					GT15-RS4-9S	GT27 GT25	
SU-5M/6M (general communication port 3)	-	RS-422	User preparing RS-422 connection diagram 6)	1000m	- (Built into GOT)	GT27 GT25 GT23	
					GT15-RS4-9S	GT27 GT25	
SU-5M/6M	U-01DM	RS-422	User preparing RS-422 connection diagram 7)	1200m	- (Built into GOT)	GT27 GT25 GT23	90 host link module for 1 GOT*2
					GT15-RS4-9S	GT27 GT25	

*1 The data communications module is manufactured by KOYO ELECTRONICS INDUSTRIES CO., LTD. For details of the product, contact KOYO ELECTRONICS INDUSTRIES CO., LTD.

*2 When the number of links exceeds 30, use a transmission line conversion unit D-01CV per 30 links. For details, refer to the following manual.

➠ KOYO EI PLC user's Manual

7.2.3 Connecting to DirectLOGIC 05 series

■1. When connecting to one PLC

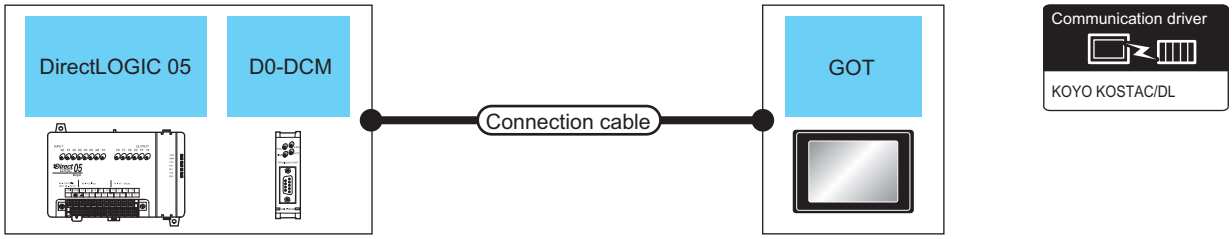

PLC			Connection cable		GOT		Number of connectable equipment
Model name	Data communications module *2	Communication Type	Cable model Connection diagram number	Max. distance	Option device	Model	
Direct LOGIC 05 (communication port 1) (communication port 2)	-	RS-232	Z-20JP (Programmable connecting cable) + S-9CNS1(Conversion connector)*1	3m	- (Built into GOT)	GT27 GT25 GT23	1 PLC for 1 GOT
					GT15-RS2-9P	GT27 GT25	
Direct LOGIC 05	D0-DCM (port 1)	RS-232	Z-20JP (Programmable connecting cable) + S-9CNS1(Conversion connector)*1	3m	- (Built into GOT)	GT27 GT25 GT23	1 data communication module for 1 GOT
					GT15-RS2-9P	GT27 GT25	
Direct LOGIC 05	D0-DCM (port 2)	RS-232	User preparing RS-232 connection diagram 2)	15m	- (Built into GOT)	GT27 GT25 GT23	
					GT15-RS2-9P	GT27 GT25	
		RS-422	User preparing RS-422 connection diagram 4)	1000m	- (Built into GOT)	GT27 GT25 GT23	
					GT15-RS4-9S	GT27 GT25	

*1 The programmable connecting cable and conversion connector are products manufactured by KOYO ELECTRONICS INDUSTRIES CO., LTD.
For details of the product, contact KOYO ELECTRONICS INDUSTRIES CO., LTD.

*2 The data communications module is manufactured by KOYO ELECTRONICS INDUSTRIES CO., LTD.
For details of the product, contact KOYO ELECTRONICS INDUSTRIES CO., LTD.

■2. When connecting to multiple PLCs

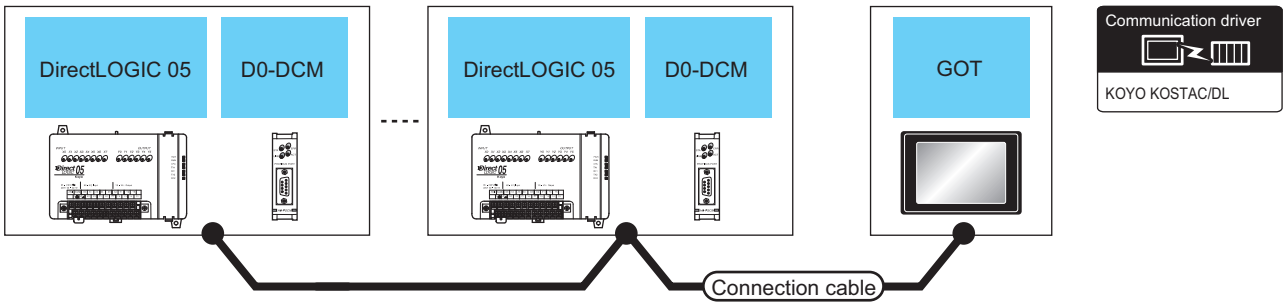

PLC			Connection cable		GOT		Number of connectable equipment
Model name	Data communications module*1	Communication Type	Cable model Connection diagram number	Max. distance	Option device	Model	
Direct LOGIC 05	D0-DCM (port 2)	RS-422	User preparing RS-422 connection diagram 8)	1000m	- (Built into GOT)	GT27 GT25 GT23	90 data communication module for 1 GOT*2
					GT15-RS4-9S	GT27 GT25	

*1 The data communications module is manufactured by KOYO ELECTRONICS INDUSTRIES CO., LTD.
For details of the product, contact KOYO ELECTRONICS INDUSTRIES CO., LTD.

*2 When the number of links exceeds 30, use a transmission line conversion unit D-01CV per 30 links.
For details, refer to the following manual.

➠ KOYO EI PLC user's Manual

7.2.4 Connecting to DirectLOGIC 06 series

■1. When connecting to one PLC

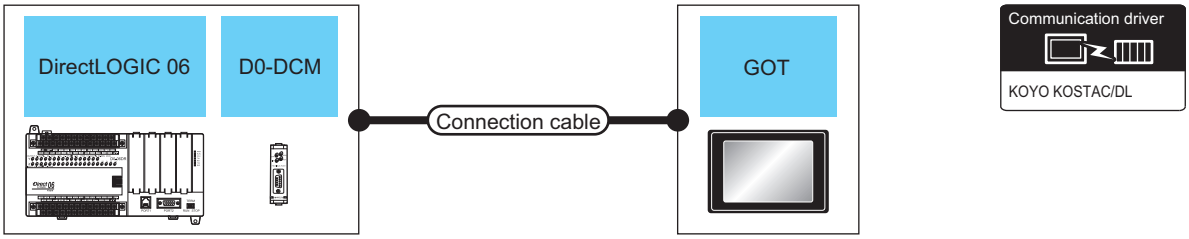

PLC			Connection cable		GOT		Number of connectable equipment
Model name	Data communications module*1	Communication Type	Cable model Connection diagram number	Max. distance	Option device	Model	
Direct LOGIC 06 (communication port 1)	-	RS-232	Z-20JP (Programmable connecting cable) + S-9CNS1(Conversion connector)*2	3m	- (Built into GOT)	GT27 GT25 GT23	1 PLC for 1 GOT
					GT15-RS2-9P	GT27 GT25	
Direct LOGIC 06 (communication port 2)	-	RS-232	User preparing RS-232 connection diagram 2)	15m	- (Built into GOT)	GT27 GT25 GT23	
					GT15-RS2-9P	GT27 GT25	
	-	RS-422	User preparing RS-422 connection diagram 4)	1000m	- (Built into GOT)	GT27 GT25 GT23	
					GT15-RS4-9S	GT27 GT25	

PLC			Connection cable		GOT		Number of connectable equipment
Model name	Data communications module*1	Communication Type	Cable model Connection diagram number	Max. distance	Option device	Model	
Direct LOGIC 06	D0-DCM (port 1)	RS-232	Z-20JP (Programmable connecting cable) + S-9CNS1(Conversion connector)*2	3m	- (Built into GOT)	GT27 GT25 GT23	1 data communication module for 1 GOT
					GT15-RS2-9P	GT27 GT25	
Direct LOGIC 06	D0-DCM (port 2)	RS-232	User preparing RS-232 connection diagram 2)	15m	- (Built into GOT)	GT27 GT25 GT23	
					GT15-RS2-9P	GT27 GT25	
		RS-422	User preparing RS-422 connection diagram 4)	1000m	- (Built into GOT)	GT27 GT25 GT23	
					GT15-RS4-9S	GT27 GT25	

*1 The data communications module is manufactured by KOYO ELECTRONICS INDUSTRIES CO., LTD.
For details of the product, contact KOYO ELECTRONICS INDUSTRIES CO., LTD.

*2 The programmable connecting cable and conversion connector are products manufactured by KOYO ELECTRONICS INDUSTRIES CO., LTD.
For details of the product, contact KOYO ELECTRONICS INDUSTRIES CO., LTD.

■2. When connecting to multiple PLCs

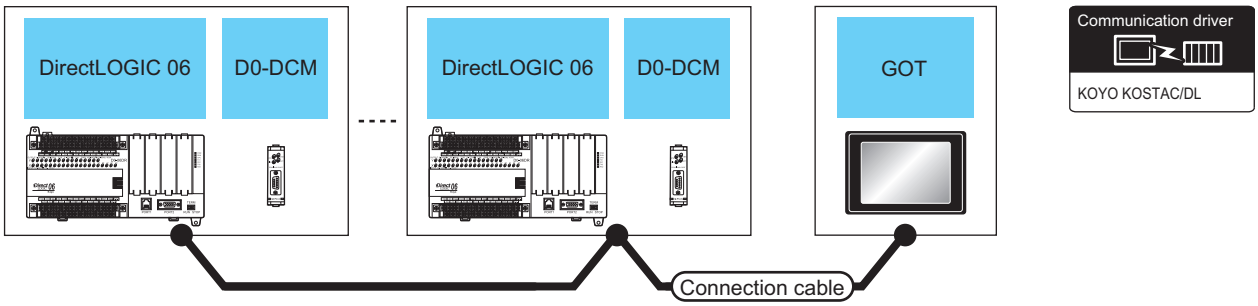

PLC			Connection cable		GOT		Number of connectable equipment
Model name	Data communication module*1	Communication Type	Cable model Connection diagram number	Max. distance	Option device	Model	
Direct LOGIC 06 (communication port 2)	-	RS-422	User preparing RS-422 connection diagram 8)	1000m	- (Built into GOT)	GT27 GT25 GT23	90 PLCs for 1 GOT*2
					GT15-RS4-9S	GT27 GT25	
Direct LOGIC 06	D0-DCM (port 2)	RS-422	User preparing RS-422 connection diagram 8)	1000m	- (Built into GOT)	GT27 GT25 GT23	90 data communication module for 1 GOT*2
					GT15-RS4-9S	GT27 GT25	

*1 The data communications module is manufactured by KOYO ELECTRONICS INDUSTRIES CO., LTD. For details of the product, contact KOYO ELECTRONICS INDUSTRIES CO., LTD.

*2 When the number of links exceeds 30, use a transmission line conversion unit D-01CV per 30 links. For details, refer to the following manual.

➠ KOYO EI PLC user's Manual

7.2.5 Connecting to D2-240, D2-250-1 or D2-260

■1. When connecting to one PLC

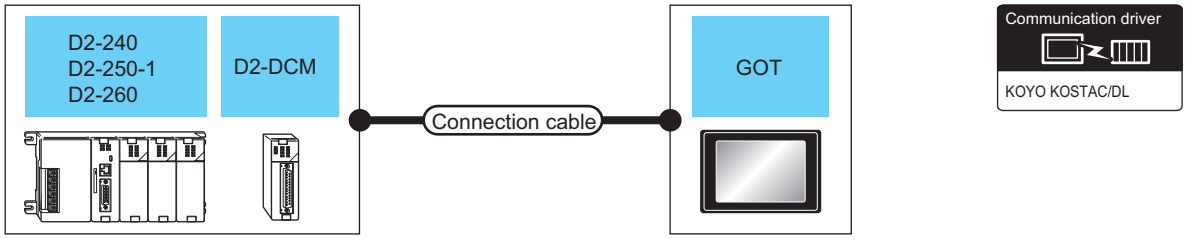

PLC			Connection cable		GOT		Number of connectable equipment
Model name	Data communications module*1	Communication Type	Cable model Connection diagram number	Max. distance	Option device	Model	
D2-240 D2-250-1 D2-260 (communication port 2)	-	RS-232	User preparing RS-232 connection diagram 2)	3m	- (Built into GOT)	GT27 GT25 GT23	1 PLC for 1 GOT
					GT15-RS2-9P	GT27 GT25	
D2-250-1 D2-260 (communication port 2)	-	RS-422	User preparing RS-422 connection diagram 4)	1000m	- (Built into GOT)	GT27 GT25 GT23	
					GT15-RS4-9S	GT27 GT25	
D2-240 D2-250-1 D2-260	D2-DCM	RS-232	User preparing RS-232 connection diagram 1)	15m	- (Built into GOT)	GT27 GT25 GT23	1 data communication module for 1 GOT
					GT15-RS2-9P	GT27 GT25	
		RS-422	User preparing RS-422 connection diagram 3)	1200m	- (Built into GOT)	GT27 GT25 GT23	
					GT15-RS4-9S	GT27 GT25	

*1 The programmable connecting cable and conversion connector are products manufactured by KOYO ELECTRONICS INDUSTRIES CO., LTD.
For details of the product, contact KOYO ELECTRONICS INDUSTRIES CO., LTD.

■2. When connecting to multiple PLCs

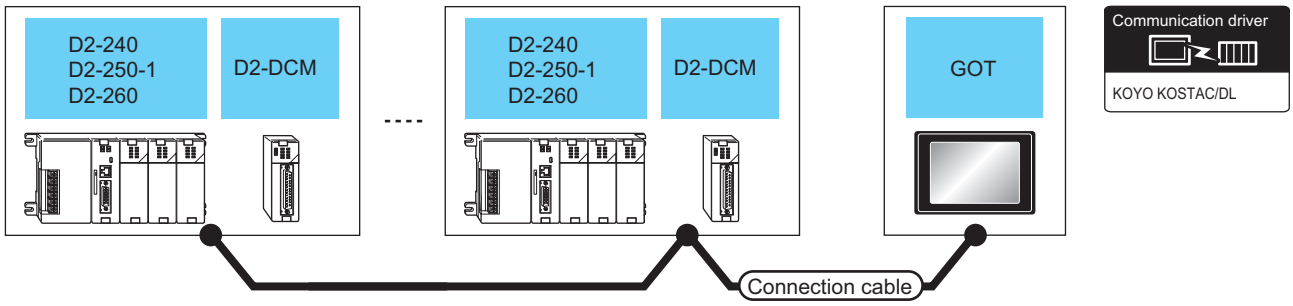

PLC			Connection cable		GOT		Number of connectable equipment
Model name	Data communications module*1	Communication Type	Cable model Connection diagram number	Max. distance	Option device	Model	
D2-250-1 D2-260 (communication port 2)	-	RS-422	User preparing RS-422 connection diagram 8)	1000m	- (Built into GOT)	GT27 GT25 GT23	90 PLCs for 1 GOT*2
					GT15-RS4-9S	GT27 GT25	
D2-240 D2-250-1 D2-260	D2-DCM	RS-422	User preparing RS-422 connection diagram 7)	1200m	- (Built into GOT)	GT27 GT25 GT23	90 data communication module for 1 GOT*2
					GT15-RS4-9S	GT27 GT25	

*1 The data communications module is manufactured by KOYO ELECTRONICS INDUSTRIES CO., LTD.
For details of the product, contact KOYO ELECTRONICS INDUSTRIES CO., LTD.

*2 When the number of links exceeds 30, use a transmission line conversion unit D-01CV per 30 links.
For details, refer to the following manual.

➠ KOYO EI PLC user's Manual

7.2.6 Connecting to PZ

■1. When connecting to one PLC

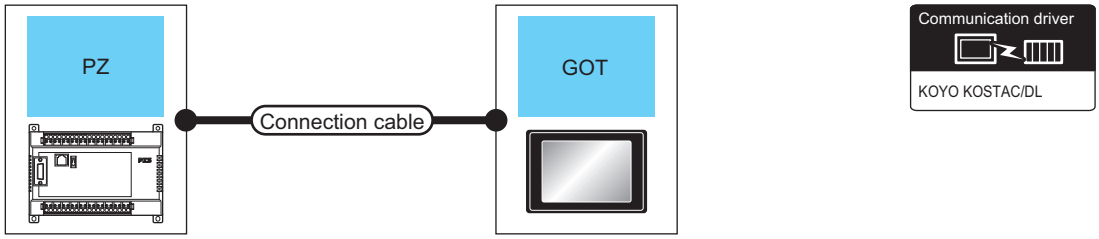

PLC		Connection cable		GOT		Number of connectable equipment
Model name	Communication Type	Cable model Connection diagram number	Max. distance	Option device	Model	
PZ (general communication port 2)	RS-232	User preparing RS-232 connection diagram 2)	15m	- (Built into GOT)	GT27 GT25 GT23	1 PLC for 1 GOT
				GT15-RS2-9P	GT27 GT25	
	RS-422	User preparing RS-422 connection diagram 4)	1000m	- (Built into GOT)	GT27 GT25 GT23	
				GT15-RS4-9S	GT27 GT25	

■2. When connecting to multiple PLCs

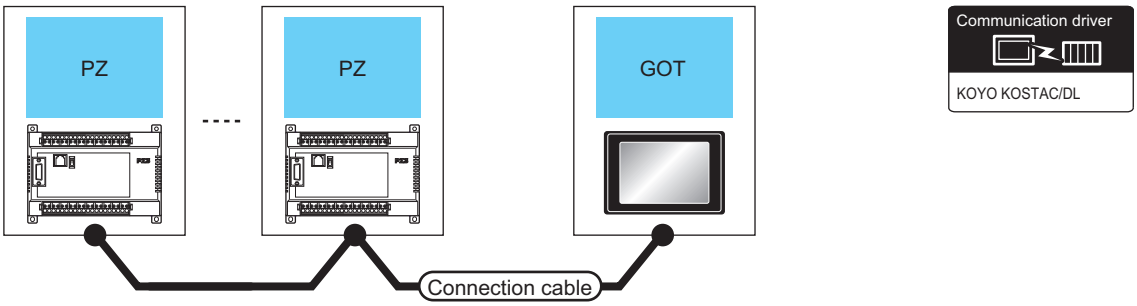

PLC		Connection cable		GOT		Number of connectable equipment
Model name	Communication Type	Cable model Connection diagram number	Max. distance	Option device	Model	
PZ (general communication port 2)	RS-422	User preparing RS-422 connection diagram 8)	1000m	- (Built into GOT)	GT27 GT25 GT23	90 PLCs for 1 GOT*1
				GT15-RS4-9S	GT27 GT25	

*1 When the number of links exceeds 30, use a transmission line conversion unit D-01CV per 30 links.
For details, refer to the following manual.

➠ KOYO EI PLC user's Manual

7.3 Connection Diagram

The following diagram shows the connection between the GOT and the PLC.

7.3.1 RS-232 cable

■1. Connection diagram

(1) RS-232 connection diagram 1)

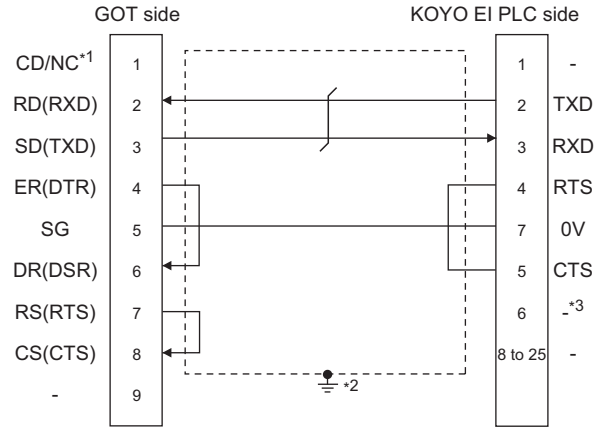

*1 GT27: CD, GT23:NC
*2 Connect FG grounding to the appropriate part of a cable shield line.
*3 For U-01DM and D2-DCM, the signal name will be +5V.

(2) RS-232 connection diagram 2)

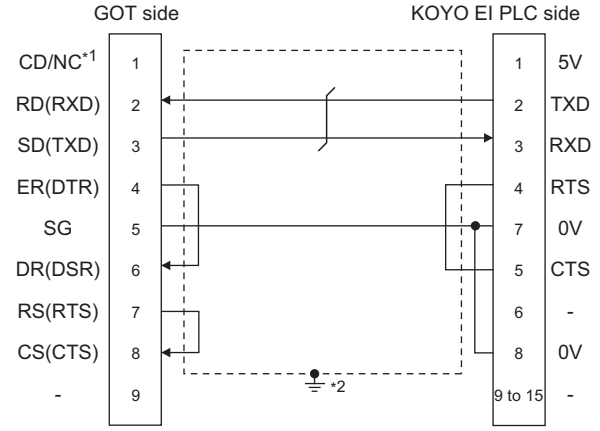

*1 GT27: CD, GT23:NC
*2 Connect FG grounding to the appropriate part of a cable shield line.

■2. Precautions when preparing a cable

(1) Cable length

The length of the RS-232 cable must be 15m or less.

(2) GOT side connector

For the GOT side connector, refer to the following.

➠ 1.4.1 GOT connector specifications

(3) KOYO EI PLC side connector

Use the connector compatible with the KOYO EI PLC side.
For details, refer to the KOYO EI PLC user's manual.

7.3.2 RS-422 cable

■1. Connection diagram

(1) RS-422 connection diagram 1)

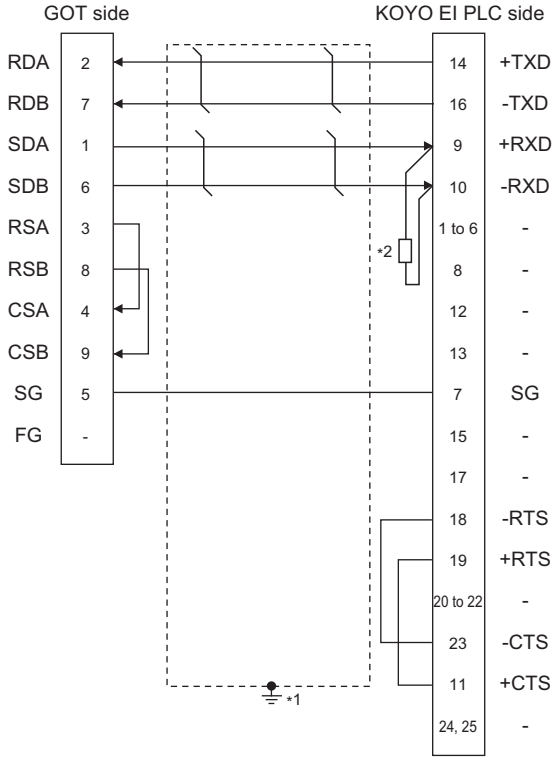

*1 Connect FG grounding to the appropriate part of a cable shield line.

*2 Connect a terminating resistor (approximately 150Ω) to the PLC at a terminal station.

(2) RS-422 connection diagram 2)

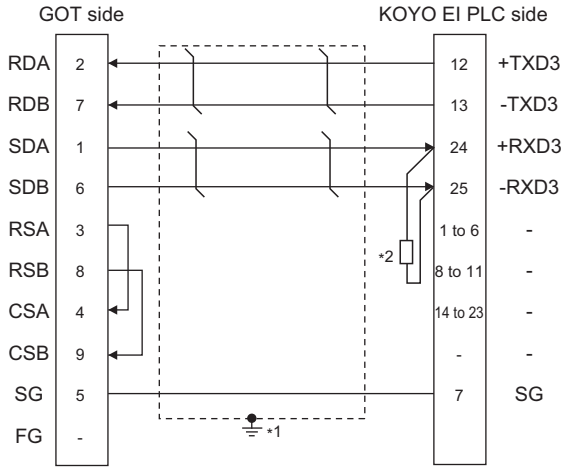

*1 Connect FG grounding to the appropriate part of a cable shield line.

*2 Connect a terminating resistor (approximately 150Ω) to the PLC at a terminal station.

(3) RS-422 connection diagram 3)

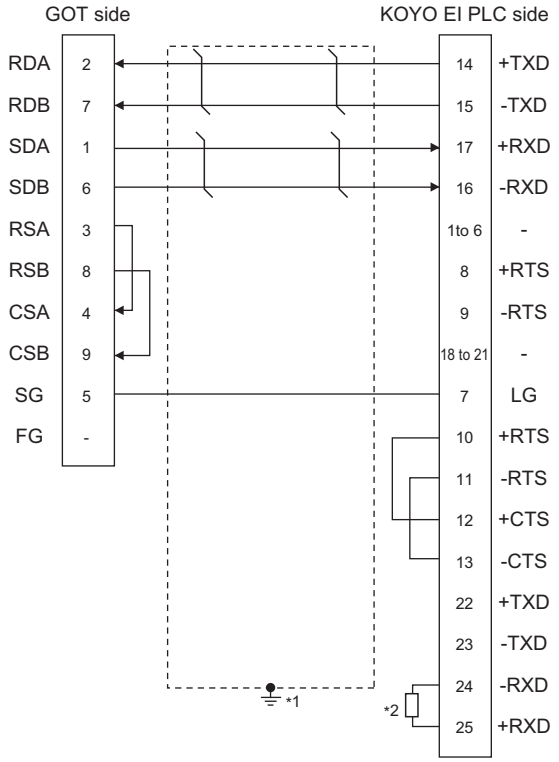

*1 Connect FG grounding to the appropriate part of a cable shield line.

*2 Connect a terminating resistor (approximately 150Ω) to the PLC at a terminal station.

(4) RS-422 connection diagram 4)

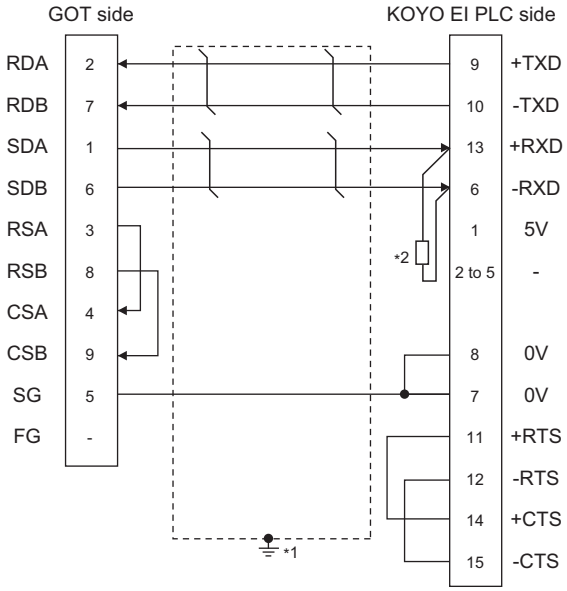

*1 Connect FG grounding to the appropriate part of a cable shield line.

*2 Connect a terminating resistor (approximately 100 to 500Ω) to the PLC to be a terminal.

(5) RS-422 connection diagram 5)

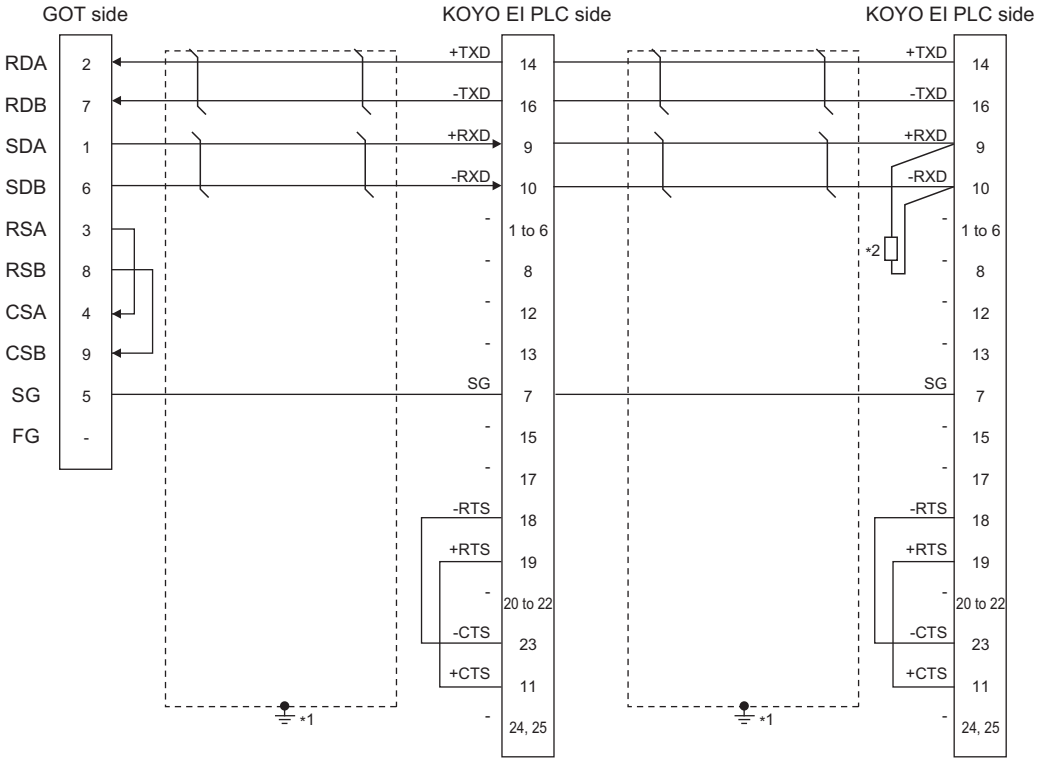

*1 Connect FG grounding to the appropriate part of a cable shield line.

*2 Connect a terminating resistor (approximately 150Ω) to the PLC at a terminal station.
When the number of links exceeds 30, use a transmission line conversion unit D-01CV per 30 links.
For details, refer to the following manual.

➠ KOYO EI PLC user's Manual

(6) RS-422 connection diagram 6)

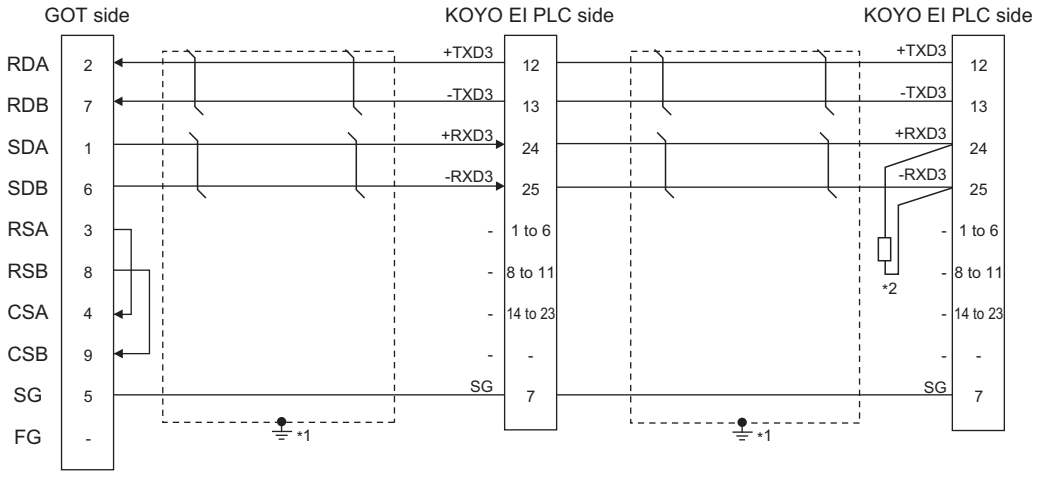

*1 Connect FG grounding to the appropriate part of a cable shield line.

*2 Connect a terminating resistor (approximately 150Ω) to the PLC at a terminal station.
When the number of links exceeds 30, use a transmission line conversion unit D-01CV per 30 links.
For details, refer to the following manual.

➠ KOYO EI PLC user's Manual

(7) RS-422 connection diagram 7)

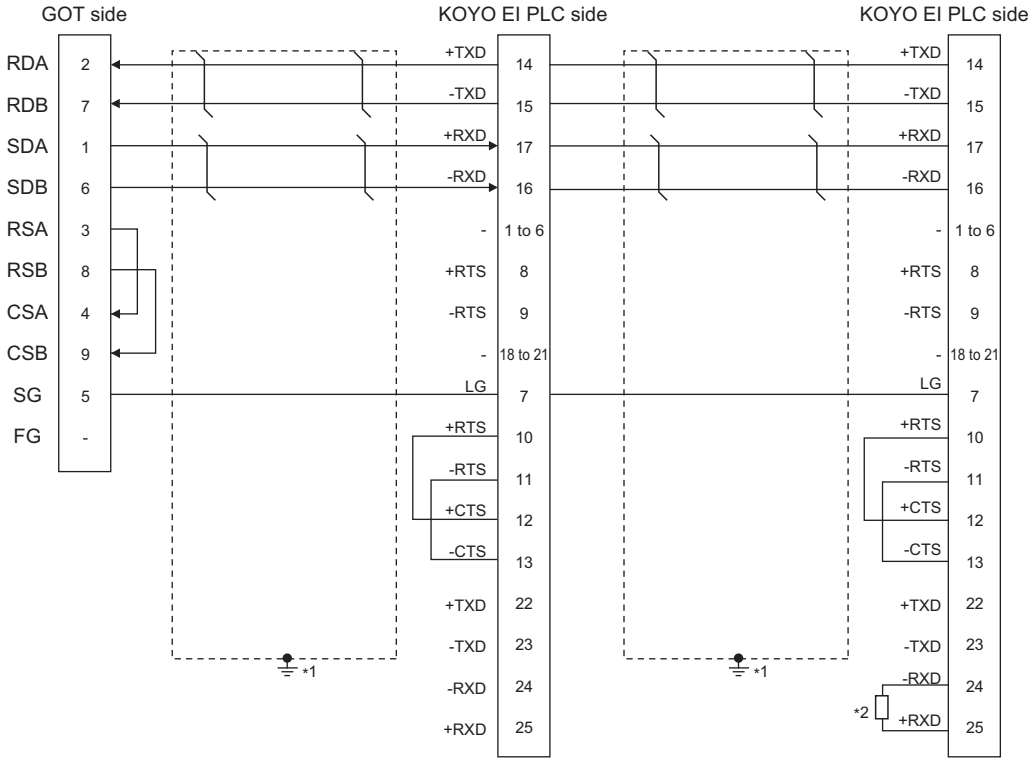

*1 Connect FG grounding to the appropriate part of a cable shield line.

*2 Connect a terminating resistor (approximately 150Ω) to the PLC at a terminal station.
When the number of links exceeds 30, use a transmission line conversion unit D-01CV per 30 links.
For details, refer to the following manual.

➠ KOYO EI PLC user's Manual

(8) RS-422 connection diagram 8)

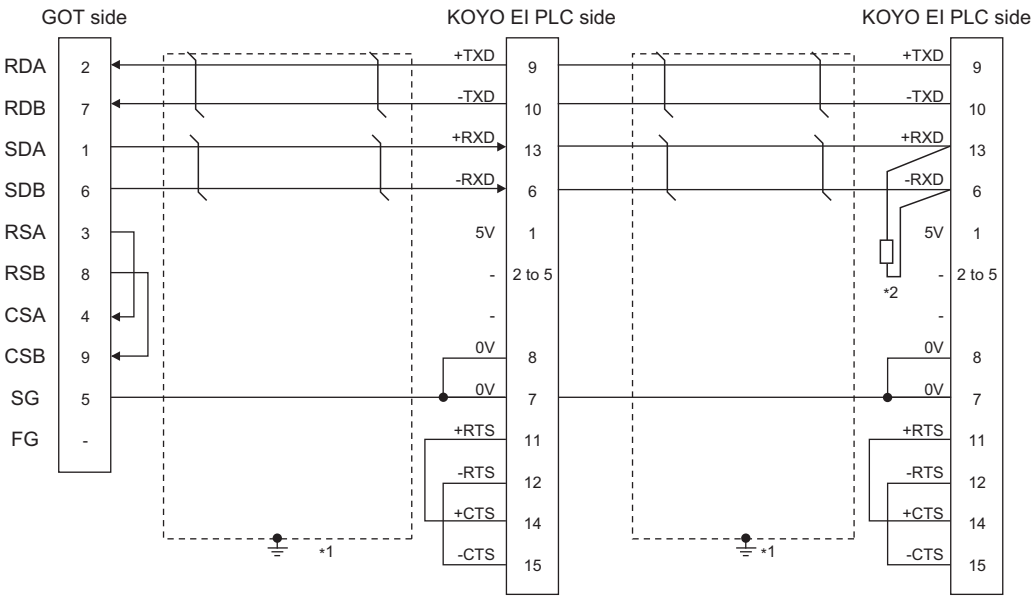

*1 Connect FG grounding to the appropriate part of a cable shield line.

*2 Connect a terminating resistor (approximately 100 to 500Ω) to the PLC to be a terminal.
When the number of links exceeds 30, use a transmission line conversion unit D-01CV per 30 links.
For details, refer to the following manual.

➠ KOYO EI PLC user's Manual

■2. Precautions when preparing a cable

(1) Cable length

The maximum length of the RS-422 cable differs according to the specifications of the KOYO EI PLC side module.
For details, refer to the following manual.

➠ KOYO EI PLC user's Manual

(2) GOT side connector

For the GOT side connector, refer to the following.

➠ 1.4.1 GOT connector specifications

(3) KOYO EI PLC side connector

Use the connector compatible with the KOYO EI PLC side.
For details, refer to the KOYO EI PLC user's manual.

■3. Connecting terminating resistors

(1) GOT side

Set the terminating resistor setting switch of the GOT main unit to "Disable".
For the procedure to set the terminating resistor, refer to the following.

➠ 1.4.3 Terminating resistors of GOT

(2) KOYO EI PLC

To connect a KOYO EI PLC to a GOT, a terminating resistor must be set to the KOYO EI PLC.

➠ KOYO EI PLC user's Manual

7.4 GOT Side Settings

7.4.1 Setting communication interface (Communication settings)

Set the channel of the equipment to be connected to the GOT.

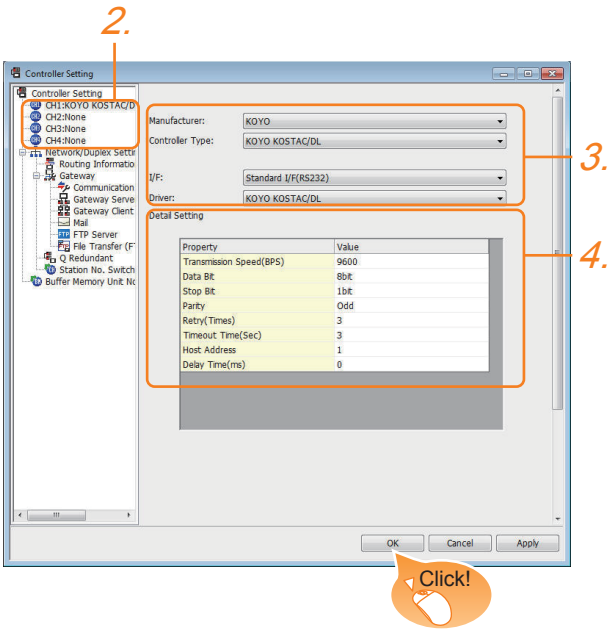

Step 1. Select [Common] → [Controller Setting] from the menu.

Step 2. The Controller Setting window is displayed. Select the channel to be used from the list menu.

Step 3. Set the following items.
- Manufacturer: KOYO
- Controller Type: KOYO KOSTAC/DL
- I/F: Interface to be used
- Driver: KOYO KOSTAC/DL

Step 4. The detailed setting is displayed after Manufacturer, Controller Type, I/F, and Driver are set. Make the settings according to the usage environment.

➠ 7.4.2 Communication detail settings

Click the [OK] button when settings are completed.

POINT

The settings of connecting equipment can be confirmed in [I/F Communication Setting]. For details, refer to the following.

➠ 1.1.2 I/F communication setting

7.4.2 Communication detail settings

Make the settings according to the usage environment.

Property	Value
Transmission Speed(BPS)	9600
Data Bit	8 bit
Stop Bit	1 bit
Parity	Odd
Retry(Times)	3
Timeout Time(Sec)	3
Host Address	1
Delay Time(ms)	0

Item	Description	Range
Transmission Speed	Set this item when change the transmission speed used for communication with the connected equipment. (Default: 9600bps)	9600bps, 19200bps, 38400bps, 57600bps, 115200bps
Data Bit	Set this item when change the data length used for communication with the connected equipment. (Default: 8bits)	7bits/8bits
Stop Bit	Specify the stop bit length for communications. (Default: 1bit)	1bit/2bits
Parity	Specify whether or not to perform a parity check, and how it is performed during communication. (Default: Odd)	None Even Odd
Retry	Set the number of retries to be performed when a communication error occurs. (Default: 3times)	0 to 5times
Timeout Time	Set the time period for a communication to time out. (Default: 3sec)	1 to 50sec
Delay Time	Set this item to adjust the transmission timing of the communication request from the GOT. (Default: 0ms)	0 to 300ms
Host Address	Specify the host address (station No. of the GOT to which the PLC is connected) in the connected network. (Default: 1)	1 to 90

POINT

(1) Communication interface setting by the Utility
The communication interface setting can be changed on the Utility's [Communication Settings] after writing [Communication Settings] of project data.
For details on the Utility, refer to the following manual.

➠ GOT2000 Series User's Manual (Utility)

(2) Precedence in communication settings
When settings are made by GT Designer3 or the Utility, the latest setting is effective.

7.5 PLC Side Setting

POINT

KOYO EI PLC

For details of KOYO EI PLCs, refer to the following manuals.

➠ KOYO EI PLC user's Manual

■1. PLC CPU

Model name		Refer to
KOSTAC SU Series	SU-5E/6B	7.5.1
	SU-5M/6M	7.5.2
DirectLOGIC 05 Series DirectLOGIC 06 Series		7.5.3
DirectLOGIC 205 Series		7.5.4
PZ series		7.5.5

■2. Data Communications Module

Model name		Refer to
Host Link Module	U-01DM	7.5.6
Data Communications Module	D0-DCM	7.5.7
	D2-DCM	7.5.8

7.5.1 Connecting to SU-5E/6B

■1. Communication settings

Make the following settings using the programmer system parameter setting.

Item	Set value
Station No.	1 to 90
Transmission mode	HEX
Parity	NONE, ODD
Data bit	8 bit (Fixation)
Stop bit	1 bit (Fixation)

■2. Setting DIP switches

Set the transmission speed using the CPU DIP switch.

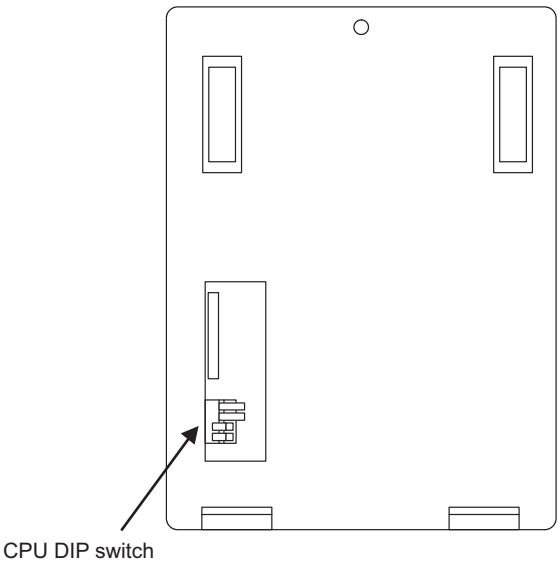

Item	Set value	Switch No.	
		3	4
Transmission speed*1	9600bps	ON	OFF
	19200bps	ON	ON

*1 Indicates only the transmission speeds that can be set on the GOT side.
Set the same transmission speed of the GOT.
For the transmission speed setting on the GOT side, refer to the following.

➠ 7.4.1 Setting communication interface (Communication settings)

7.5.2 Connecting to SU-5M/6M

■1. Communication settings

Make the following settings using the programmer system parameter setting.

Item	Set value
Protocol	CCM
Response delay time	0ms
Timeout Time	800ms/960ms/1200ms/1600ms/4000ms/8000ms/16000ms/40000ms
Station No.	1 to 90
Transmission mode	HEX
Stop bit	1bit, 2bits
Data bit	8bits (Fixed)
Parity	NONE, ODD, EVEN
Transmission speed*1	9600bps, 19200bps, 38400bps

*1 Indicates only the transmission speeds that can be set on the GOT side.
Set the same transmission speed of the GOT.
For the transmission speed setting on the GOT side, refer to the following.

➠ 7.4.1 Setting communication interface (Communication settings)

7.5.3 Connecting to DirectLOGIC 05 series or DirectLOGIC 06 series

■1. Communication settings

Make the following settings using the programmer system parameter setting.

Item	Set value
Protocol	CCM NET (DirectNET)
Timeout	780ms or more
RTS On Delay Time	0ms*1
RTS Off Delay Time	0ms*1
Station No.	1 to 90
Transmission speed*2	9600bps, 19200bps, 38400bps
Stop bit	1bit, 2bits
Parity	NONE, ODD, EVEN
Communication format	HEX

*1 To use a PLC with multidrop, set the "RTS on delay time" to 5ms or more and the "RTS off delay time" to 2ms or more.

*2 Indicates only the transmission speeds that can be set on the GOT side.
Set the same transmission speed of the GOT.
For the transmission speed setting on the GOT side, refer to the following.

➠ 7.4.1 Setting communication interface (Communication settings)

7.5.4 Connecting to DirectLOGIC 205 series

■1. Communication settings

Make the following settings using the programmer system parameter setting.

Item	Set value
Protocol	CCM NET (DirectNET)
Station No.	1 to 90
Transmission speed*1	9600bps, 19200bps, 38400bps
Data bit	8bits (fixed)
Stop bit	1bit (fixed)
Parity	NONE, ODD
Self-diagnostic mode	OFF
Response delay time	0ms
Peer to Peer	OFF
Master/Slave	Slave
Timeout	Enable
Transmission mode	HEX
MODBUS	OFF

*1 Indicates only the transmission speeds that can be set on the GOT side.
Set the same transmission speed of the GOT.
For the transmission speed setting on the GOT side, refer to the following.

➠ 7.4.1 Setting communication interface (Communication settings)

7.5.5 Connecting to PZ Series

■1. Communication settings

Make the following settings using the programmer system parameter setting.

Item	Set value
Protocol	CCM NET
Timeout	800ms/960ms/1200ms/1600ms/4000ms/8000ms/16000ms/40000ms
Response delay time	0ms
Station No.	1 to 90
Communication format	HEX
Transmission speed*1	9600bps, 19200bps, 38400bps
Stop bit	1bit
Parity	NONE, ODD

*1 Indicates only the transmission speeds that can be set on the GOT side.
Set the same transmission speed of the GOT.
For the transmission speed setting on the GOT side, refer to the following.

➠ 7.4.1 Setting communication interface (Communication settings)

7.5.6 Connecting to U-01DM

■1. Setting switches

Make the communication settings using each setting switch.

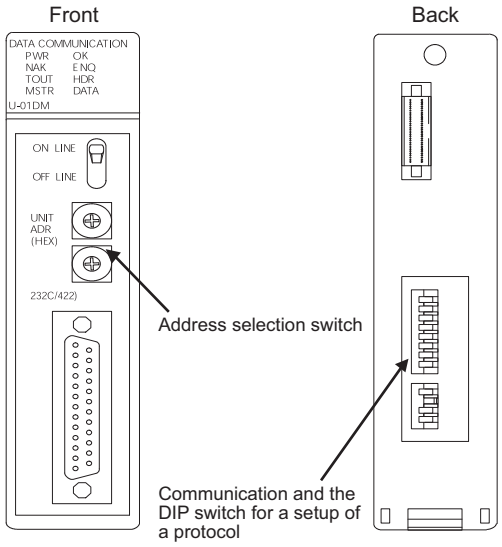

(1) Address selection switch(SW2, SW3)

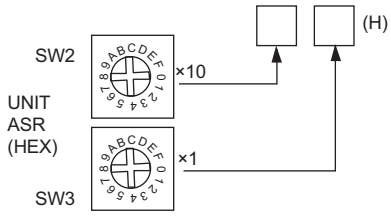

Switch No.	Settings	Setting details
SW2	Code higher rank (10^1figures)	01 to 5A
SW3	Code low rank (10^0figures)	

(2) Communication and the DIP switch for a setup of a protocol(SW4)

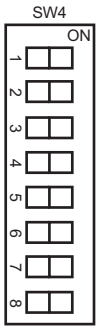

Setting item	Set value	Switch No.							
		1	2	3	4	5	6	7	8
Transmission speed*1	9600bps	OFF	ON	ON					
	19200bps	ON	ON	ON					
	38400bps	OFF	OFF	OFF					
Parity	ODD				ON				
	NONE				OFF				
Self-diagnostic	OFF					OFF			
Response delay time	0ms						OFF	OFF	OFF

*1 Indicates only the transmission speeds that can be set on the GOT side.
Set the same transmission speed of the GOT.
For the transmission speed setting on the GOT side, refer to the following.

➠ 7.4.1 Setting communication interface (Communication settings)

(3) Communication and the DIP switch for a setup of a protocol(SW5)

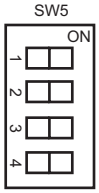

Item	Set value	Switch No.			
		1	2	3	4
Peer to Peer	OFF	OFF			
M/S	Slave		OFF		
TOUT existence	Enable			OFF	
ASCII/HEX	HEX				OFF

7.5.7 Connecting to D0-DCM

■1. Communication settings

Write the following communication settings to the specified register using the programmer.For details of the register, refer to the following manual.

➠ KOYO EI PLC user's Manual

Item	Set value
Transmission mode	HEX
Protocol	DirectNet
Station No.	1 to 90
Transmission speed*1	9600bps, 19200bps, 38400bps, 57600bps, 115200bps
Parity	NONE, ODD, EVEN (Only communication port 2)
RTS On Delay Time (Only communication port 2)	0ms
RTS Off Delay Time (Only communication port 2)	0ms
Timeout (Only communication port 2)	800ms/960ms/1200ms/1600ms/4000ms/8000ms/16000ms/40000ms
485 mode selection (Only communication port 2)	RS232, RS422/485 4 line type
Data bit (Only communication port 2)	8bits, 7bits
Stop bit (Only communication port 2)	1bit, 2bits
The timeout between characters (Only communication port 2)	0 to 9999ms
The completion of a setting	Default use,A preset value is effective
Reset timeout	Invalid,Effective

*1 Indicates only the transmission speeds that can be set on the GOT side.
Set the same transmission speed of the GOT.
For the transmission speed setting on the GOT side, refer to the following.

➠ 7.4.1 Setting communication interface (Communication settings)

7.5.8 Connecting to D2-DCM

■1. Communication settings

Make the following settings using the programmer.

Item	Set value
Station No.	1 to 90
Transmission speed*1	9600bps, 19200bps, 38400bps
Data bit	8bits (fixed)
Stop bit	1bit (fixed)
Parity	NONE, ODD
Self-diagnostic mode	OFF
Response delay time	0ms
Peer to Peer	OFF
Master/Slave	Slave
Timeout	Enable
Transmission mode	HEX
MODBUS	OFF

*1 Indicates only the transmission speeds that can be set on the GOT side.
Set the same transmission speed of the GOT.
For the transmission speed setting on the GOT side, refer to the following.

➠ 7.4.1 Setting communication interface (Communication settings)

7.5.9 Station No. settings

Set each station number so that no station number overlaps.
The station number can be set without regard to the cable connection order. There is no problem even if station numbers are not consecutive.

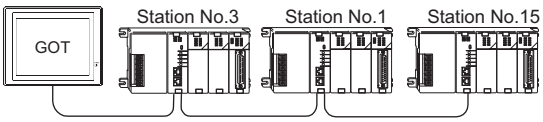

The example of a Station No. setting

■1. Direct specification

Specify the station No. of the PLC to be changed when setting device.

Specification range
1 to 90

7.6 Device Range that Can Be Set

The device ranges of controller that can be used for GOT are as follows.
Note that the device ranges in the following tables are the maximum values that can be set in GT Designer3.
The device specifications of controllers may differ depending on the models, even though belonging to the same series.
Please make the setting according to the specifications of the controller actually used.
When a non-existent device or a device number outside the range is set, other objects with correct device settings may not be monitored.

■1. Setting item

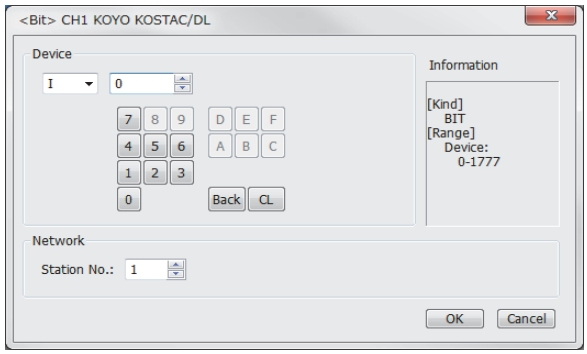

Item	Description	
Device	Set the device name, device number, and bit number. The bit number can be set only when specifying the bit of word device.	
Information	Displays the device type and setting range which are selected in [Device].	
Network	Set the monitor target of the set device.	
	Station No.	Select this item when monitoring the PLC of the specified station No.

7.6.1 KOYO EI PLC (KOYO KOSTAC/DL)

Device name		Setting range	Device No. representation
Bit device	Input (I)*5	I0 to I1777	Octal
	Output (Q)*5	Q0 to Q1777	
	Link relay (GI)	GI0 to GI3777	
	Link output (GQ)	GQ0 to GQ3777	
	Internal relay (M)	M0 to M3777	
	Stage (S)	S0 to S1777	
	Timer (T)	T0 to T377	
	Counter (C)	C0 to C377	
	Special relay (SP)*1	SP0 to SP777	
Word device	Timer (current value) (R)	R0 to R377	
	Preparatory register (R)*5	R400 to R677	
	Special register 1 (R)*1*5	R700 to R777	
	Timer (current value) (R)*3	R1000 to R1377	
	Data register 1 (R)*2*5	R1400 to R7377	
	Special register 2 (R)*1*4*5	R7400 to R7777	
	Data register 2 (R)*5	R10000 to R36777	
	Special register 3 (R)*1*5	R37000 to R37777	
	Link relay (R)	R40000 to R40177	
	Link output (R)	R40200 to R40377	
	Input (R)	R40400 to R40477	
	Output (R)	R40500 to R40577	
	Internal relay (R)	R40600 to R40777	
	Stage (R)	R41000 to R41077	
	Timer (R)	R41100 to R41117	
	Counter (R)	R41140 to R41157	
	Special relay (R)	R41200 to R41237	

*1 Read-only device for KOSTAC SU series

*2 The GOT cannot write data to R7377 for the SU-5M and SU-6M.

*3 For Direct Logic 05 series and Direct Logic 06 series, devices from R1200 to R1377 are used as V-memory 2.

*4 The GOT cannot write data to devices from R7766 to R7774 (calendar area).

*5 The device names differ according to the series.
The following shows the device names for each series.

KOSTAC SU PZ	Direct Logic 05 Direct Logic 06	Direct Logic 205
Input	Input relay	Input
Output	Output relay	Output
Preparatory register	V-memory 1	Data register 1
Special register 1	System parameter 1	System parameter 1
Data register 1	V-memory 2	Data register 2
Special register 2	System parameter 2	System parameter 2
Data register 2	V-memory 3	Data register 3
Special register 3	System parameter 4	System parameter 4

7.7 Precautions

■1. GOT clock control

The GOT clock function is available only for the PLC with a calendar function. Note: Although the "time adjusting" and "time broadcast" functions can be selected on the GOT, the "time broadcast" function is not available. Do not select the "time broadcast" function. If both of the functions are selected, not only the "time broadcast" function but also the "time adjusting" function will be disabled.

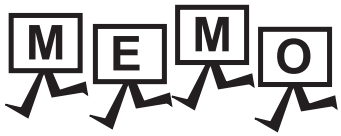
MEMO

8. CONNECTION TO JTEKT PLC

8.1 Connectable Model List . . . . . 8 - 2
8.2 System Configuration . . . . . 8 - 2
8.3 Connection Diagram. . . . . 8 - 10
8.4 GOT Side Settings . . . . . 8 - 14
8.5 PLC Side Setting. . . . . 8 - 16
8.6 Device Range that Can Be Set. . . . . 8 - 22
8.7 Precautions . . . . . 8 - 24

8. CONNECTION TO JTEKT PLC

8.1 Connectable Model List

The following table shows the connectable models.

Model name	Model type	Clock	Communication Type	Connectable GOT	Refer to
PC3JG-P	TIC-6088	○	RS-232 RS-422	GT27 GT25 GT23	➡ 8.2.1
PC3JG	TIC-6125				
PC3JD	TIC-5642				
PC3JD-C	TIC-6029				
PC3J*1	TIC-5339	○	RS-232 RS-422	GT27 GT25 GT23	➡ 8.2.2
PC3JL	TIC-5783				
PC2J	THC-2764	○	RS-232 RS-422	GT27 GT25 GT23	➡ 8.2.3
PC2JS	THC-2994				
PC2JR	THC-5053				
PC2JC	THC-5070	○	RS-232 RS-422	GT27 GT25 GT23	➡ 8.2.4
PC2J16P	THC-5169				
PC2J16PR	THC-5173				

*1 Use PC3J of the version 2.1 or later.

8.2 System Configuration

8.2.1 Connecting to PC3JG, PC3JG-P, PC3JD or PC3JD-C

■1. For the RS-422 connection

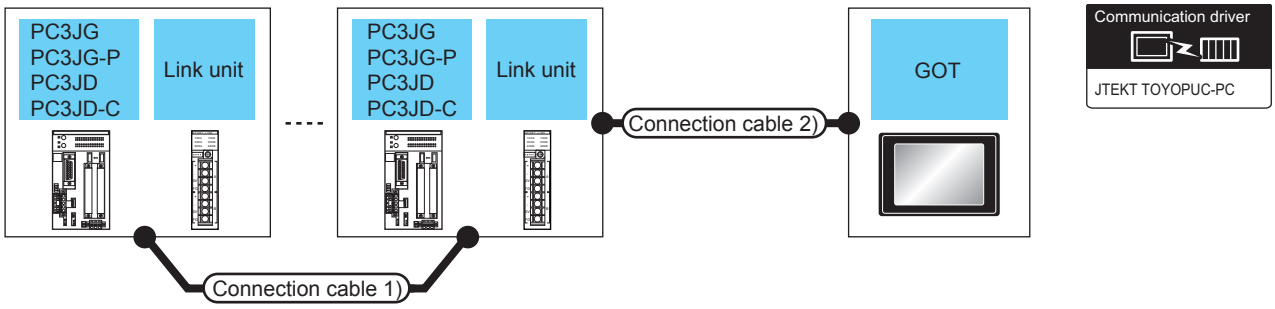

PLC			Connection cable 1)	Connection cable 2)	Max. distance	GOT		Number of connectable equipment
Model name	Link unit*1	Communication Type	Cable model Connection diagram number	Cable model Connection diagram number		Option device	Model	
PC3JG PC3JG-P PC3JD PC3JD-C	PC/CMP2-LINK (THU-5139)	RS-422	User preparing RS-422 connection diagram 4)	GT09-C30R41201-6C(3m) GT09-C100R41201-6C(10m) GT09-C200R41201-6C(20m) GT09-C300R41201-6C(30m) or User preparing RS-422 connection diagram 7)	500m	- (Built into GOT)	GT27 GT25 GT23	32 PLCs for 1 GOT
						GT15-RS4-9S	GT27 GT25	

*1 The link unit is a product manufactured by JTEKT Corporation. For details of the product, contact JTEKT Corporation.

■2. For the RS-232 connection (via an interface converter)

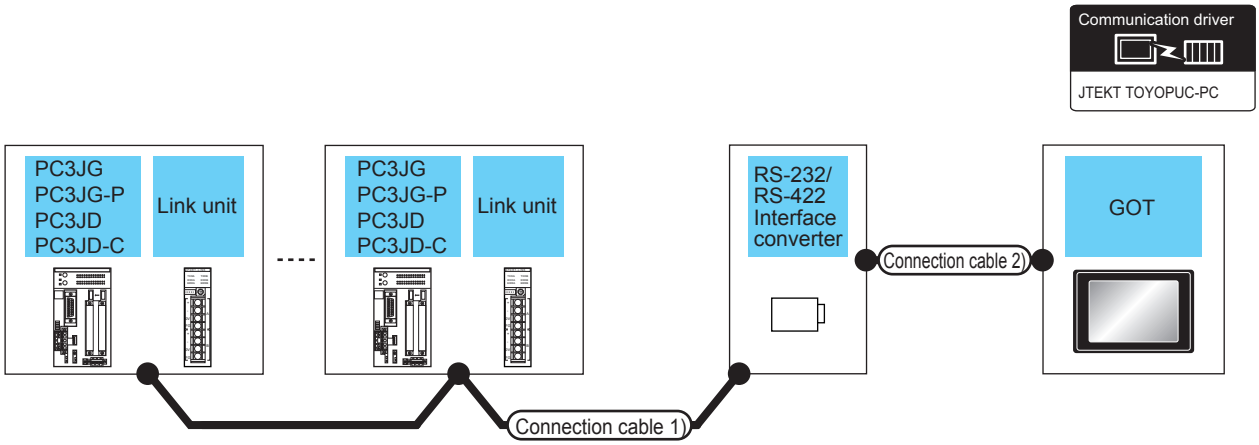

PLC		Connection cable 1)		RS-232/RS-422 interface converter*2		Connection cable 2)		GOT		Number of connectable equipment
Model name	Link unit*1	Cable model Connection diagram number	Max. distance	Model name	Communication Type	Cable model Connection diagram number	Max. distance	Option device	Model	
PC3JG PC3JG-P PC3JD PC3JD-C	-	User preparing RS-422 connection diagram 1)	500m	TXU-2051	RS-232	GT09-C30R21201-25P(3m) or User preparing RS-232 connection diagram 1)	15m	- (Built into GOT)	GT27 GT25 GT23	32 PLCs for 1 GOT
								GT15-RS2-9P	GT27 GT25	
	PC/CMP-LINK (THU-2755) 2PORT-LINK (THU-2927)	User preparing RS-422 connection diagram 2)	500m	TXU-2051	RS-232	GT09-C30R21201-25P(3m) or User preparing RS-232 connection diagram 1)	15m	- (Built into GOT)	GT27 GT25 GT23	
								GT15-RS2-9P	GT27 GT25	
	PC/CMP2-LINK (THU-5139)	User preparing RS-422 connection diagram 3)	500m	TXU-2051	RS-232	GT09-C30R21201-25P(3m) or User preparing RS-232 connection diagram 1)	15m	- (Built into GOT)	GT27 GT25 GT23	
								GT15-RS2-9P	GT27 GT25	

*1 The link unit is a product manufactured by JTEKT Corporation. For details of the product, contact JTEKT Corporation.

*2 The interface converter is a product manufactured by JTEKT Corporation. For details of the product, contact JTEKT Corporation.

8.2.2 Connecting to PC3J or PC3JL

■1. For the RS-422 connection

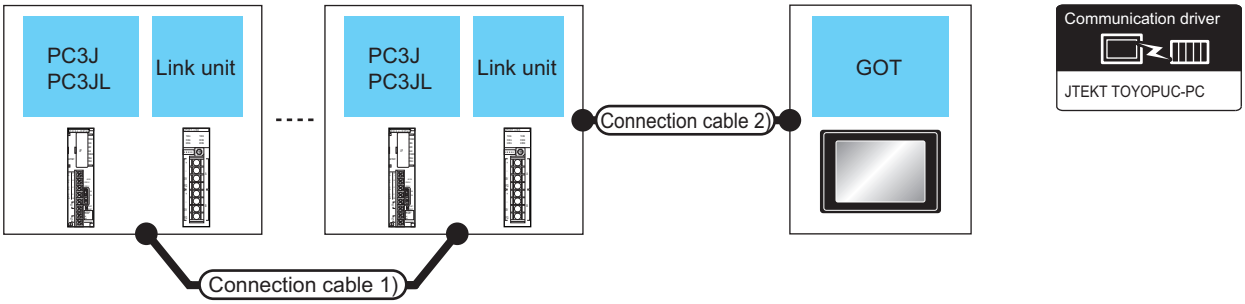

PLC			Connection cable 1)	Connection cable 2)	Max. distance	GOT		Number of connectable equipment
Model name	Link unit*1	Communication Type	Cable model Connection diagram number	Cable model Connection diagram number		Option device	Model	
PC3J PC3JL	-	RS-422	User preparing RS-422 connection diagram 6)	GT09-C30R41201-6C(3m) GT09-C100R41201-6C(10m) GT09-C200R41201-6C(20m) GT09-C300R41201-6C(30m) or User preparing RS-422 connection diagram 7)	500m	- (Built into GOT)	GT27 GT25 GT23	32 PLCs for 1 GOT
						GT15-RS4-9S	GT27 GT25	
	PC/CMP2-LINK (THU-5139)	RS-422	User preparing RS-422 connection diagram 4)	GT09-C30R41201-6C(3m) GT09-C100R41201-6C(10m) GT09-C200R41201-6C(20m) GT09-C300R41201-6C(30m) or User preparing RS-422 connection diagram 7)	500m	- (Built into GOT)	GT27 GT25 GT23	
						GT15-RS4-9S	GT27 GT25	

*1 The link unit is a product manufactured by JTEKT Corporation. For details of the product, contact JTEKT Corporation.

■2. For the RS-232 connection (via interface converter)

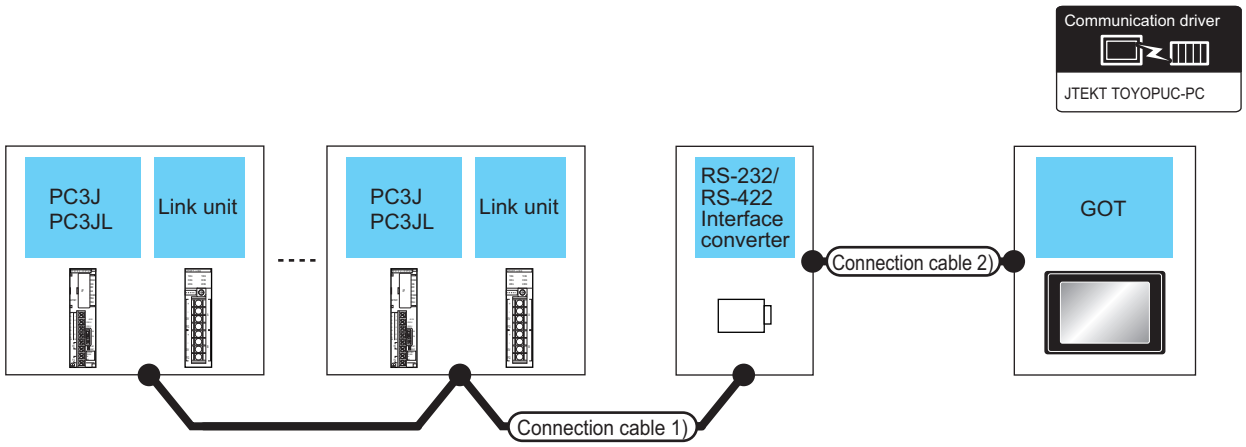

PLC		Connection cable 1)		RS-232/RS-422 interface converter*2		Connection cable 2)		GOT		Number of connectable equipment
Model name	Link unit*1	Cable model Connection diagram number	Max. distance	Model name	Communication Type	Cable model Connection diagram number	Max. distance	Option device	Model	
PC3J PC3JL	-	User preparing RS-422 connection diagram 1)	500m	TXU-2051	RS-232	GT09-C30R21201-25P(3m) or User preparing RS-232 connection diagram 1)	15m	- (Built into GOT)	GT27 GT25 GT23	32 PLCs for 1 GOT
								GT15-RS2-9P	GT27 GT25	
		User preparing RS-422 connection diagram 5)	500m	TXU-2051	RS-232	GT09-C30R21201-25P(3m) or User preparing RS-232 connection diagram 1)	15m	- (Built into GOT)	GT27 GT25 GT23	
								GT15-RS2-9P	GT27 GT25	
	PC/CMP-LINK (THU-2755) 2PORT-LINK (THU-2927)	User preparing RS-422 connection diagram 2)	500m	TXU-2051	RS-232	GT09-C30R21201-25P(3m) or User preparing RS-232 connection diagram 1)	15m	- (Built into GOT)	GT27 GT25 GT23	
								GT15-RS2-9P	GT27 GT25	
	PC/CMP2-LINK (THU-5139)	User preparing RS-422 connection diagram 4)	500m	TXU-2051	RS-232	GT09-C30R21201-25P(3m) or User preparing RS-232 connection diagram 1)	15m	- (Built into GOT)	GT27 GT25 GT23	
								GT15-RS2-9P	GT27 GT25	

*1 The link unit is a product manufactured by JTEKT Corporation. For details of the product, contact JTEKT Corporation.
*2 The interface converter is a product manufactured by JTEKT Corporation. For details of the product, contact JTEKT Corporation.

8.2.3 Connecting to PC2J, PC2JS or PC2JR

■1. For the RS-422 connection

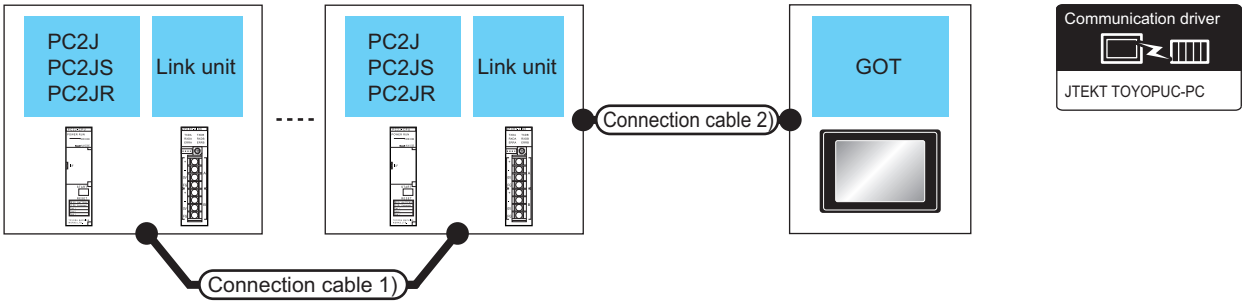

PLC			Connection cable 1)	Connection cable 2)	Max. distance	GOT		Number of connectable equipment
Model name	Link unit*1	Communication Type	Cable model Connection diagram number	Cable model Connection diagram number		Option device	Model	
PC2J PC2JS PC2JR	PC/CMP2-LINK (THU-5139)	RS-422	User preparing RS-422 connection diagram 4)	GT09-C30R41201-6C(3m) GT09-C100R41201-6C(10m) GT09-C200R41201-6C(20m) GT09-C300R41201-6C(30m) or User preparing RS-422 connection diagram 7)	500m	- (Built into GOT)	GT27 GT25 GT23	32 PLCs for 1 GOT
						GT15-RS4-9S	GT27 GT25	

*1 The link unit is a product manufactured by JTEKT Corporation.For details of the product, contact JTEKT Corporation.

■2. For the RS-232 connection (via interface converter)

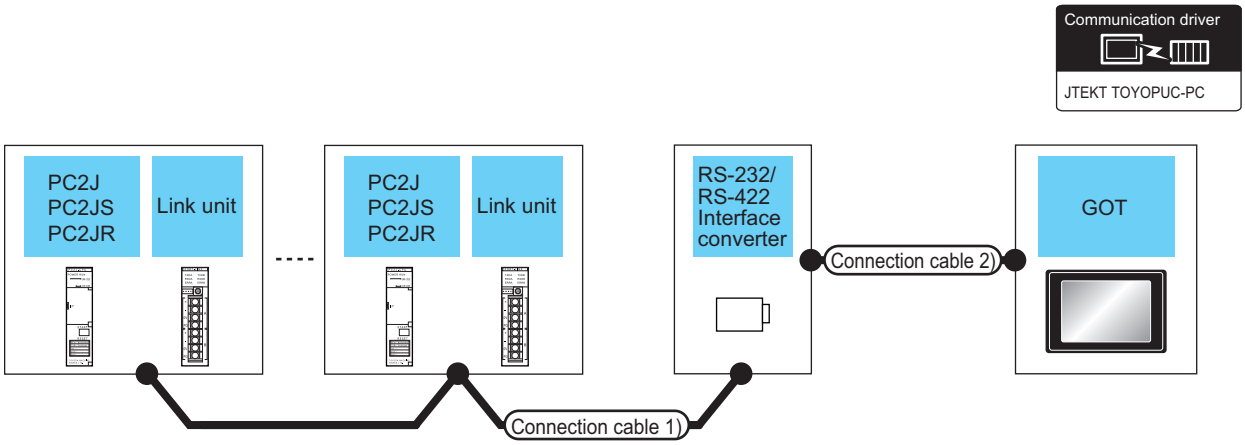

PLC		Connection cable 1)		RS-232/RS-422 interface converter*2		Connection cable 2)		GOT		Number of connectable equipment
Model name	Link unit*1	Cable model Connection diagram number	Max. distance	Model name	Communication Type	Cable model Connection diagram number	Max. distance	Option device	Model	
PC2J PC2JS PC2JR	PC/CMP-LINK (THU-2755) 2PORT-LINK (THU-2927)	User preparing RS-422 connection diagram 2)	500m	TXU-2051	RS-232	GT09-C30R21201-25P(3m) or User preparing RS-232 connection diagram 1)	15m	- (Built into GOT)	GT27 GT25 GT23	32 PLCs for 1 GOT
								GT15-RS2-9P	GT27 GT25	
	PC/CMP2-LINK (THU-5139)	User preparing RS-422 connection diagram 3)	500m	TXU-2051	RS-232	GT09-C30R21201-25P(3m) or User preparing RS-232 connection diagram 1)	15m	- (Built into GOT)	GT27 GT25 GT23	
								GT15-RS2-9P	GT27 GT25	

*1 The link unit is a product manufactured by JTEKT Corporation. For details of the product, contact JTEKT Corporation.

*2 The interface converter is a product manufactured by JTEKT Corporation. For details of the product, contact JTEKT Corporation.

8.2.4 Connecting to PC2JC, PC2J16P or PC2J16PR

■1. For the RS-422 connection

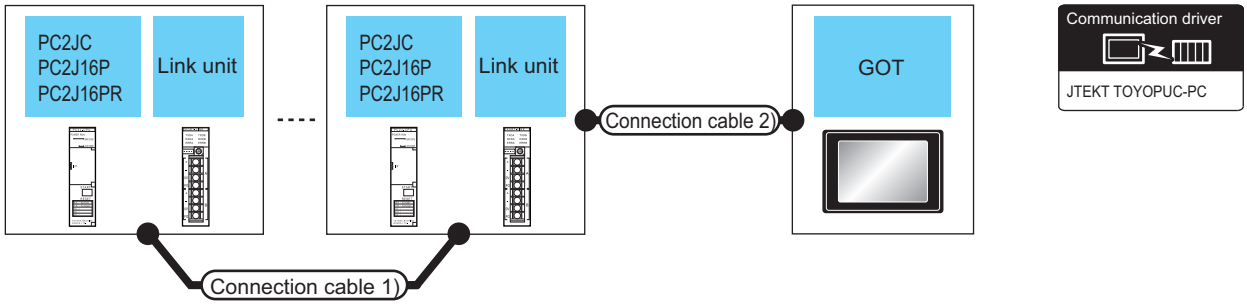

PLC			Connection cable 1)	Connection cable 2)	Max. distance	GOT		Number of connectable equipment
Model name	Link unit*1	Communication Type	Cable model Connection diagram number	Cable model Connection diagram number		Option device	Model	
PC2JC PC2J16P PC2J16PR	PC/CMP2-LINK (THU-5139)	RS-422	User preparing RS-422 connection diagram 4)	User preparing RS-422 connection diagram 7)	500m	- (Built into GOT)	GT27 GT25 GT23	32 PLCs for 1 GOT
						GT15-RS4-9S	GT27 GT25	

*1 The link unit is a product manufactured by JTEKT Corporation. For details of the product, contact JTEKT Corporation.

■2. For the RS-232 connection (via interface converter)

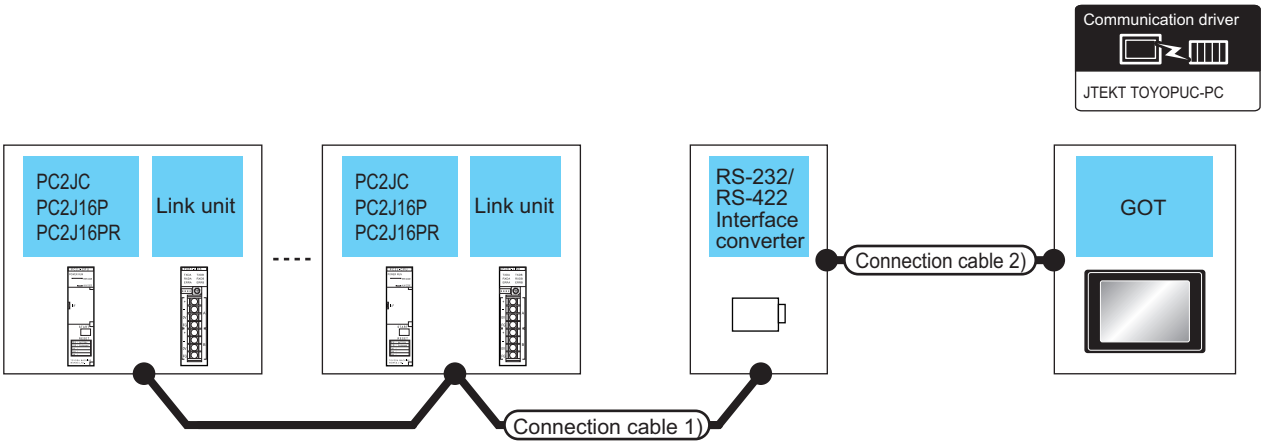

PLC		Connection cable 1)		RS-232/RS-422 interface converter*2		Connection cable 2)		GOT		Number of connectable equipment
Model name	Link unit*1	Cable model Connection diagram number	Max. distance	Model name	Communication Type	Cable model Connection diagram number	Max. distance	Option device	Model	
PC2JC PC2J16P PC2J16PR	-	User preparing RS-422 connection diagram 1)	500m	TXU-2051	RS-232	GT09-C30R21201-25P(3m) or User preparing RS-232 connection diagram 1)	15m	- (Built into GOT)	GT27 GT25 GT23	32 PLCs for 1 GOT
								GT15-RS2-9P	GT27 GT25	
	PC/CMP-LINK (THU-2755) 2PORT-LINK (THU-2927)	User preparing RS-422 connection diagram 2)	500m	TXU-2051	RS-232	GT09-C30R21201-25P(3m) or User preparing RS-232 connection diagram 1)	15m	- (Built into GOT)	GT27 GT25 GT23	
								GT15-RS2-9P	GT27 GT25	
	PC/CMP2-LINK (THU-5139)	User preparing RS-422 connection diagram 3)	500m	TXU-2051	RS-232	GT09-C30R21201-25P(3m) or User preparing RS-232 connection diagram 1)	15m	- (Built into GOT)	GT27 GT25 GT23	
								GT15-RS2-9P	GT27 GT25	

*1 The link unit is a product manufactured by JTEKT Corporation. For details of the product, contact JTEKT Corporation.

*2 The interface converter is a product manufactured by JTEKT Corporation. For details of the product, contact JTEKT Corporation.

8.3 Connection Diagram

The following diagram shows the connection between the GOT and the PLC.

8.3.1 RS-232 cable

■1. Connection diagram

(1) RS-232 connection diagram 1)

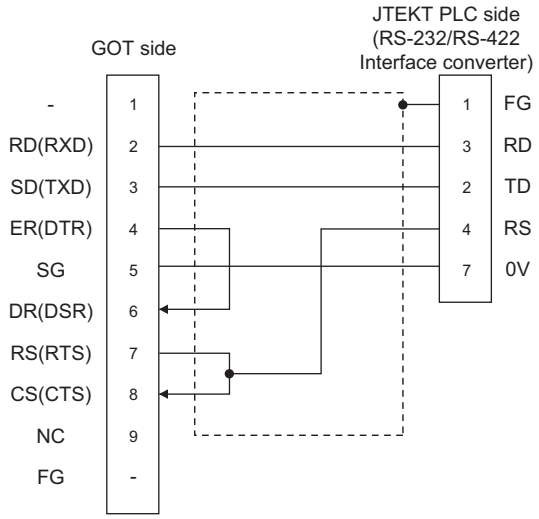

■2. Precautions when preparing a cable

(1) Cable length

The length of the RS-232 cable must be 15m or less.

(2) GOT side connector

For the GOT side connector, refer to the following.

➠ 1.4.1 GOT connector specifications

(3) JTEKT PLC side connector

Use the connector compatible with the JTEKT PLC side module.
For details, refer to the JTEKT PLC user's manual.

8.3.2 RS-422 cable

■1. Connection diagram

(1) RS-422 connection diagram 1)

(For PC3JG-P/PC3JG/PC3JD/PC3JD-C)

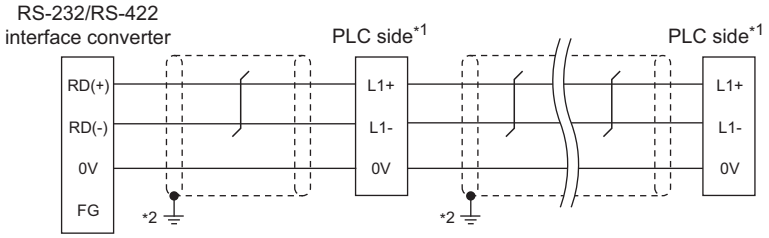

*1 Terminating resistors should not be provided for a PLC and an RS-232/RS-422 interface converter which will be terminals.

*2 Connect FG grounding to the appropriate part of a cable shield line.

(For PC3J/PC3JL)

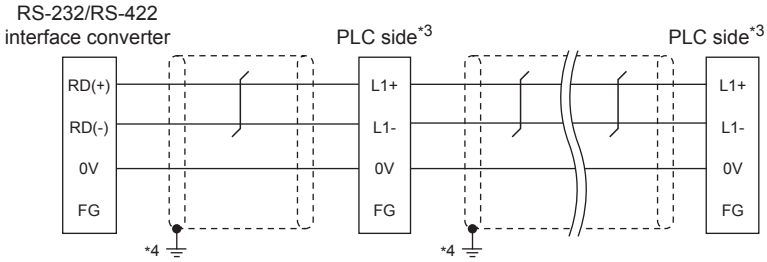

*3 Terminating resistors should not be provided for a PLC and an RS-232/RS-422 interface converter which will be terminals.

*4 Connect FG grounding to the appropriate part of a cable shield line.

(For PC2JC/PC2J16P, PC2J16PR)

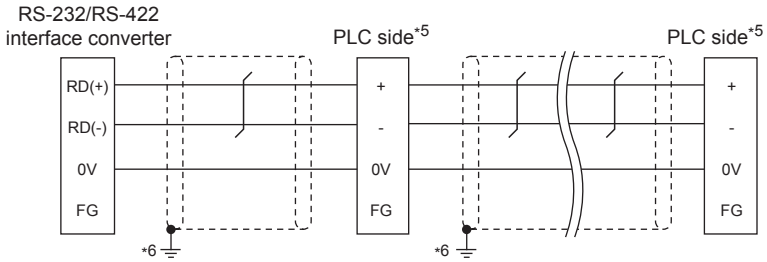

*5 Terminating resistors should not be provided for a PLC and an RS-232/RS-422 interface converter which will be terminals.

*6 Connect FG grounding to the appropriate part of a cable shield line.

(2) RS-422 connection diagram 2)

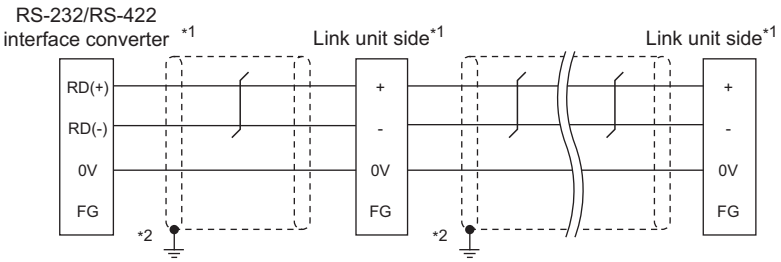

*1 Terminating resistors should not be provided for a PLC and an RS-232/RS-422 interface converter which will be terminals.

*2 Connect FG grounding to the appropriate part of a cable shield line.

(3) RS-422 connection diagram 3)

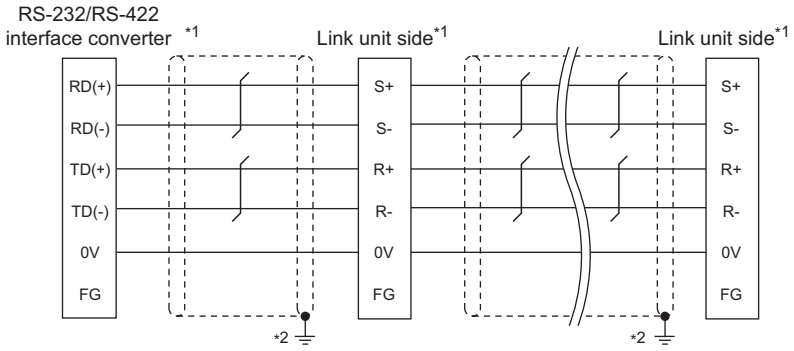

*1 Terminating resistors should not be provided for a PLC and an RS-232/RS-422 interface converter which will be terminals.

*2 Connect FG grounding to the appropriate part of a cable shield line.

(4) RS-422 connection diagram 4)

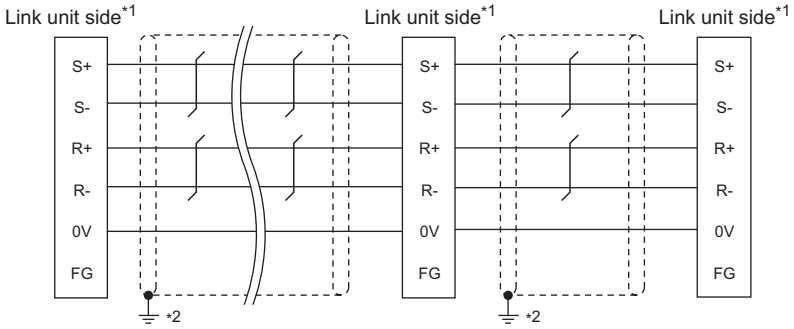

*1 Terminating resistors should not be provided for a PLC and an RS-232/RS-422 interface converter which will be terminals.

*2 Connect FG grounding to the appropriate part of a cable shield line.

(5) RS-422 connection diagram 5)

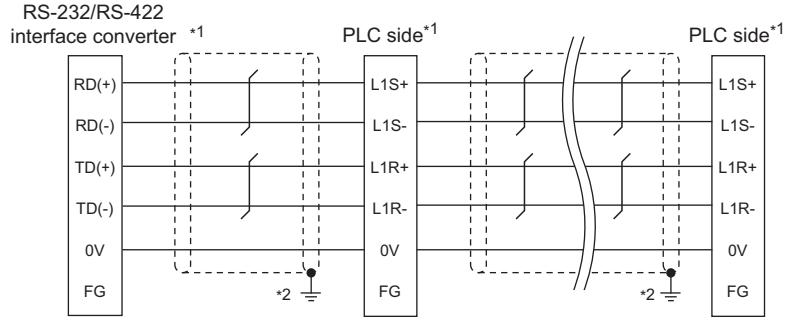

*1 Terminating resistors should not be provided for a PLC and an RS-232/RS-422 interface converter which will be terminals.

*2 Connect FG grounding to the appropriate part of a cable shield line.

(6) RS-422 connection diagram 6)

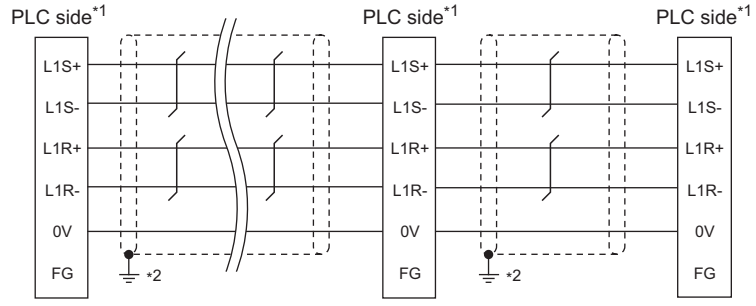

*1 Terminating resistors should not be provided for a PLC and an RS-232/RS-422 interface converter which will be terminals.

*2 Connect FG grounding to the appropriate part of a cable shield line.

(7) RS-422 connection diagram 7)

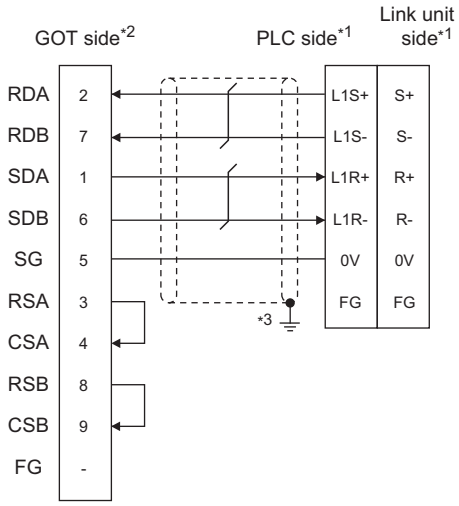

*1 Terminating resistors should not be provided for a PLC and an RS-232/RS-422 interface converter which will be terminals.

*2 Set the terminating resistor of GOT side which will be a terminal.

➠ ■3. Connecting terminating resistors

*3 Connect FG grounding to the appropriate part of a cable shield line.

■2. Precautions when preparing a cable

(1) Cable length

The maximum length of the RS-422 cable must be 500m or less.

(2) GOT side connector

For the GOT side connector, refer to the following.

➠ 1.4.1 GOT connector specifications

(3) JTEKT PLC side connector

Use the connector compatible with the JTEKT PLC side module.
For details, refer to the JTEKT PLC user's manual.

■3. Connecting terminating resistors

(1) GOT side

Set the terminating resistor setting switch of the GOT main unit to "Disable".
For the procedure to set the terminating resistor, refer to the following.

➠ 1.4.3 Terminating resistors of GOT

8.4.1 Setting communication interface (Communication settings)

Set the channel of the equipment to be connected to the GOT.

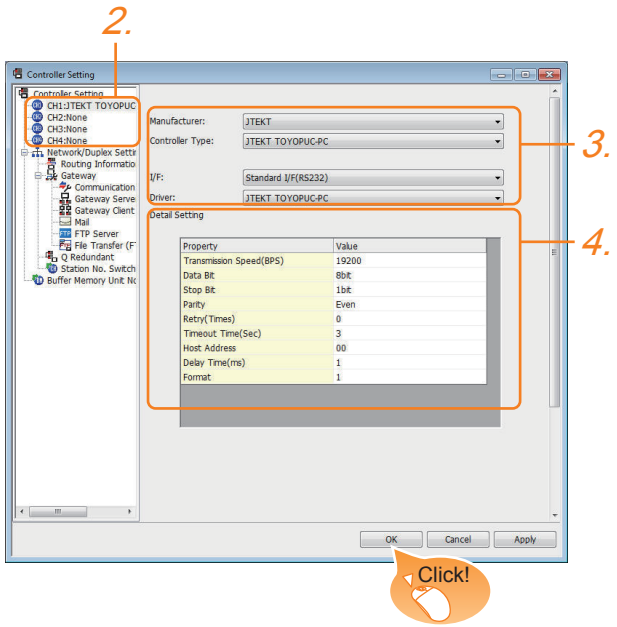

Step 1. Select [Common] → [Controller Setting] from the menu.

Step 2. The Controller Setting window is displayed. Select the channel to be used from the list menu.

Step 3. Set the following items.
- Manufacturer: JTEKT
- Controller Type: JTEKT TOYOPUC-PC
- I/F: Interface to be used
- Driver: JTEKT TOYOPUC-PC

Step 4. The detailed setting is displayed after Manufacturer, Controller Type, I/F, and Driver are set. Make the settings according to the usage environment.

➠ 8.4.2 Communication detail settings

Click the [OK] button when settings are completed.

POINT

The settings of connecting equipment can be confirmed in [I/F Communication Setting]. For details, refer to the following.

➠ 1.1.2 I/F communication setting

8.4.2 Communication detail settings

Make the settings according to the usage environment.

Property	Value
Transmission Speed(BPS)	19200
Data Bit	8 bit
Stop Bit	1 bit
Parity	Even
Retry(Times)	0
Timeout Time(Sec)	3
Host Address	00
Delay Time(ms)	1
Format	1

Item	Description	Range
Transmission Speed	Set this item when change the transmission speed used for communication with the connected equipment. (Default: 19200bps)	9600bps, 19200bps, 38400bps, 57600bps, 115200bps
Data Bit	Set this item when change the data length used for communication with the connected equipment. (Default: 8bits)	7bits/8bits
Stop Bit	Specify the stop bit length for communications. (Default: 1bit)	1bit/2bits
Parity	Specify whether or not to perform a parity check, and how it is performed during communication. (Default: Even)	None Even Odd
Retry	Set the number of retries to be performed when a communication error occurs. (Default: 0time)	0 to 5times
Timeout Time	Set the time period for a communication to time out. (Default: 3sec)	3 to 30sec
Host Address	Specify the host address (station No. of the GOT to which the PLC is connected) in the connected network. (Default: 00)	00 to 37 (Octal)
Delay Time	Set this item to adjust the transmission timing of the communication request from the GOT. (Default: 0)	0 to 300ms
Format	Select the communication format. (Default: 1) format 1: PC3J extended function incompliant format 2: PC3J extended function compliant	1/2

POINT

(1) Format setting

The compatible format of PLC differs depending on model.

Model name	Compatible format
PC2J, PC2JS, PC2JR, PC2JC, PC2J16P, PC2J16PR	Format 1 only
PC3JG, PC3JG-P, PC3JD, PC3JD-C, PC3J, PC3JL	Format 1 or Format 2

For details of PC3J extended function, refer to the following manual.

➠ JTEKT PLC user's manual

(2) Communication interface setting by the Utility

The communication interface setting can be changed on the Utility's [Communication Settings] after writing [Communication Settings] of project data.
For details on the Utility, refer to the following manual.

➠ GOT2000 Series User's Manual (Utility)

(3) Precedence in communication settings

When settings are made by GT Designer3 or the Utility, the latest setting is effective.

POINT

JTEKT PLC

For details of JTEKT PLCs, refer to the following manuals.

➠ JTEKT PLC user's manual

Model name		Refer to
PLC CPU	PC3JG, PC3JG-P, PC3JD, PC3JD-C, PC3J, PC3JL, PC2J, PC2JS, PC2JR	8.5.1
	PC2JC	8.5.2
	PC2J16P, PC2J16RR	8.5.3
RS-232/RS-422 interface converter	RS-232/RS-422 interface converter	8.5.4
Link unit	PC/CMP-LINK	8.5.5
	2PORT-LINK	
	PC/CMP2-LINK	

8.5.1 Connecting to PC3JG, PC3JD, PC3JD-C, PC3JG-P, PC3J, PC3JL, PC2J, PC2JS or PC2JR

■1. Communication settings

Make the communication settings using the PLC peripheral device (PCwin).

Item	Set value
Transmission speed*1	9600bps, 19200bps, 38400bps
Data bit*1	8bits, 7bits
Parity bit	Even (fixed)
Stop bit*1	1bit, 2bits
Station No.*2	0 to 37 (Octal)
2-wire/4-wire type*3	2-wire type or 4-wire type

*1 Adjust the settings with GOT settings.
*2 Avoid duplication of the station No. with any of the other units.
*3 Make the settings referring to the following connection diagram.

➠ 8.3.2 RS-422 cable

8.5.2 Connecting to PC2JC

■1. Communication settings

Make the communication settings using each setting switch.
For the detail settings, refer to the following manual.

➠ JTEKT PLC user's manual

Item	Set value
Transmission speed*1	9600bps, 19200bps
Data bit*1	8bits, 7bits
Stop bit*1	1bit, 2bits
Station No.*1	0 to 37 (Octal)

*1 Adjust the settings with GOT settings.

■2. Settings by switch

Make the communication settings using each setting switch.

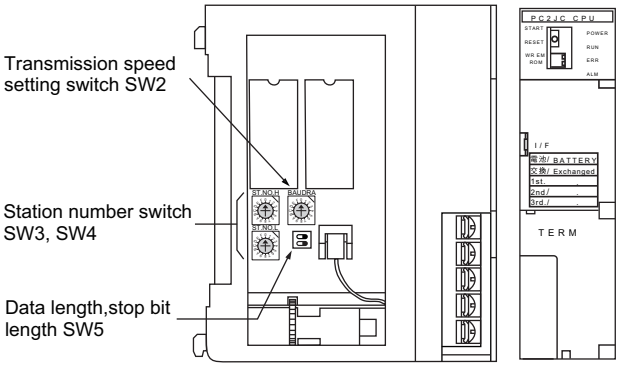

(1) Setting of the station No.

Set the station No. between 00 and 37 (Octal).

Switch name	Station number setting
SW3	Upper digit
SW4	Lower digit

(2) Transmission speed settings

Switch name	Switch position	Transmission speed (bps)
SW2	1	19200
	2	9600

(3) Settings of data length and stop bit length

Switch name	Setting item	Set value	Switch No.	
			2	1
SW5	Data bit	8bits	OFF	
		7bits	ON	
	Stop bit length	2bits		OFF
		1bit		ON

8.5.3 Connecting to PC2J16P or PC2J16PR

■1. Communication settings

Make the communication settings using each setting switch.
For the detail settings, refer to the following manual.

➠ JTEKT PLC user's manual

Item	Set value
Transmission speed*1	9600bps, 19200bps
Data bit*1	8bits, 7bits
Stop bit*1	1bit, 2bits
Station No.*1	0 to 37 (Octal)
Selection of module type	Computer link

*1 Adjust the settings with GOT settings.

■2. Settings by switch

Make the communication settings using each setting switch.

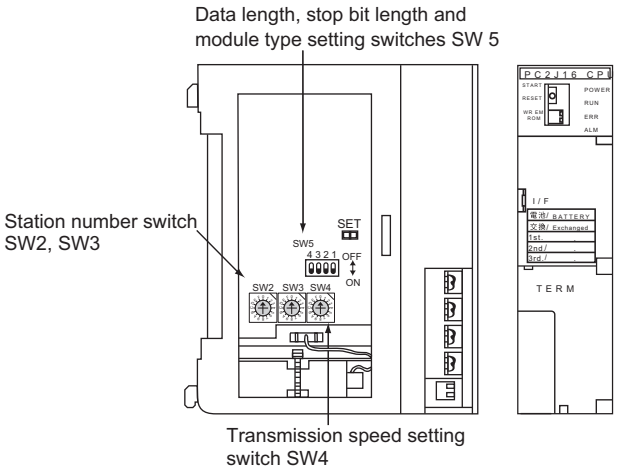

(1) Setting of the station No.

Set the station No. between 00 and 37 (Octal).

Switch name	Station number setting
SW2	Upper digit
SW3	Lower digit

(2) Transmission speed settings

Switch name	Switch position	Transmission speed (bps)
SW4	1	19200
	2	9600

(3) Settings of data length, stop bit length and module type

Switch name	Setting item	Set value	Switch No.		
			4	3	2
SW5	Data bit	8bits	OFF		
		7bits	ON		
	Stop bit length	2bits		OFF	
		1bit		ON	
	Module type	Computer link			OFF

8.5.4 RS-232/RS-422 interface converter setting

■1. Communication settings

Make the communication settings by the setting switch of the RS-232/RS-422 interface converter.

Item	Set value
Transmission speed*1	9600bps, 19200bps
2-wire/4-wire type*2	2-wire type or 4-wire type
Echo back	OFF

*1 Adjust the settings with GOT settings.

*2 Set referring to the RS-422 connection diagram.For details, refer to the following.

➠ 8.3.2 RS-422 cable

■2. Settings by switch

Make the communication settings by each setting switch of the RS-232/RS-422 interface converter.

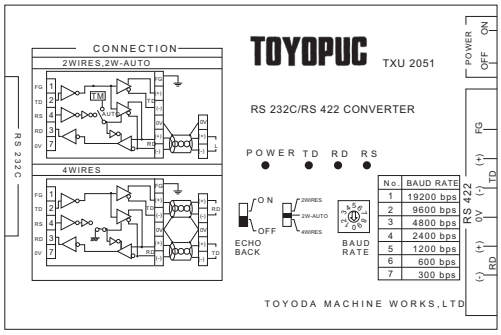

(1) Transmission speed settings

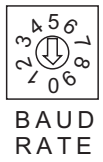

Transmission speed (bps)	Switch position
9600	2
19200	1

(2) Mode setting switch

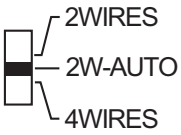

Mode	Switch position
2-wire type	2W-AUTO
4-wire type	4 WIRES

(3) Echoback setting switch

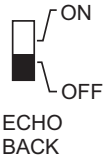

Setting	Switch position
OFF	OFF

8.5.5 Link unit setting

■1. Communication settings

Make the communication settings using each setting switch of the link unit.
For the detail settings, refer to the following manual.

➠ User's Manual of the JTEKT link unit

Item	Set value
Transmission speed*1	9600bps, 19200bps
Data bit*1	8bits, 7bits
Stop bit*1	1bit, 2bits
Station No.*1	0 to 37 (Octal)
Selection of module type	Computer link
Selection of 2-wire type or 4- wire type*2	2-wire type or 4-wire type

*1 Adjust the settings with GOT settings.
*2 Set referring to the RS-422 connection diagram.For details, refer to the following.

➠ 8.3.2 RS-422 cable

■2. Settings by switch

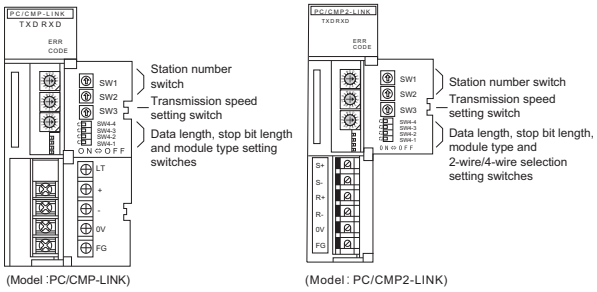

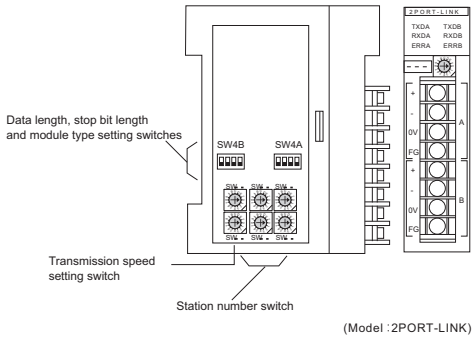

(1) Setting of the station No.

Set the station No. between 00 and 37 (Octal).

Switch name	Station number setting
SW1	Upper digit
SW2	Lower digit

(2) Transmission speed settings

Switch name	Switch position	Transmission speed (bps)
SW3	2	9600
	1	19200

(3) Data length, stop bit length, module type and 2-wire/4-wire type communication selection setting

Switch name	Setting item	Set value	Switch No.			
			4	3	2	1
SW4	Data bit	8bits	OFF			
		7bits	ON			
	Stop bit length	2bits		OFF		
		1bit		ON		
	Module type	PLC link unit			OFF	
		Computer link			ON	
	2-wire type/4- wire type communication selection*1	2-wire type communication				OFF
		4-wire type communication				ON

*1 The setting is available only for the link unit (Model: PC/CMP2-LINK).

8.5.6 Station number setting

Set each station number so that no station number overlaps.
The station number can be set without regard to the cable connection order. There is no problem even if station numbers are not consecutive.

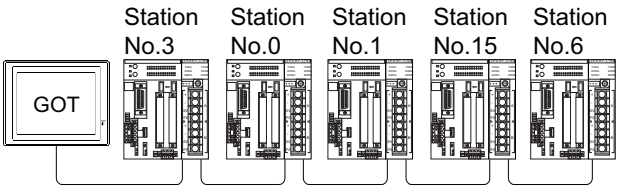

Examples of station number setting

■1. Direct specification

Specify the station No. of the PLC to be changed when setting device.

Specification range
00 to 37 (Octal)

8.6 Device Range that Can Be Set

The device ranges of controller that can be used for GOT are as follows.
Note that the device ranges in the following tables are the maximum values that can be set in GT Designer3.
The device specifications of controllers may differ depending on the models, even though belonging to the same series.
Please make the setting according to the specifications of the controller actually used.
When a non-existent device or a device number outside the range is set, other objects with correct device settings may not be monitored.

■1. Setting item

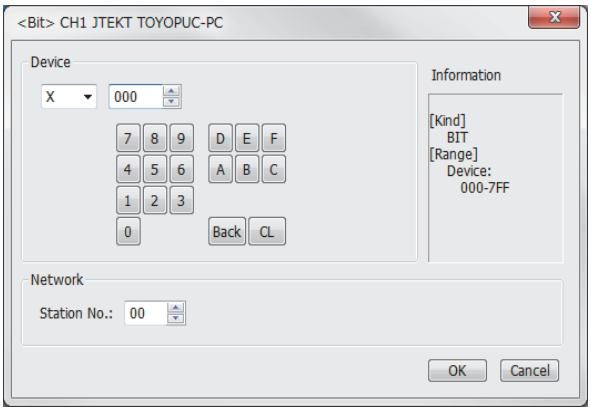

Item	Description	
Device	Set the device name, device number, and bit number. The bit number can be set only when specifying the bit of word device.	
	Program No.	Sets the number of the program for which the device is set.
Information	Displays the device type and setting range which are selected in [Device].	
Network	Set the monitor target of the set device.	
	Station No.	Set this item when monitoring the PLC of the specified station No. (octal)

POINT

Program number setting (when PC3JG, PC3J or PC3JD is used)
Setting of a program number is allowed for the devices indicated below.
Internal relay (M), keep relay (K), link relay (L), special relay (V), edge detection (P), timer (T), counter (C), data register (D), link register (R), special register (S), current value register (N)

8.6.1 JTEKT PLC (JTEKT TOYOPUC-PLC)

Device name		Setting range	Device No. representation
Bit device	Input (X)*1	X000 to X7FF	Hexadecimal
	Output (Y)*1	Y000 to Y7FF	
	Link relay (L)	L000 to L7FF	
	Internal relay (M)	M000 to M7FF	
	Keep relay (K)	K000 to K2FF	
	Edge detection (P)	P000 to P1FF	
	Timer (T)*1	T000 to T1FF	
	Counter (C)*1	C000 to C1FF	
	Special relay (V)	V000 to V0FF	
	Extended input (EX)*1	EX000 to EX7FF	
	Extended output (EY)*1	EY000 to EY7FF	
	Extended internal relay (EM)	EM0000 to EM1FFF	
	Extended keep-relay (EK)	EK000 to EKFFF	
	Extended special relay (EV)	EV000 to EVFFF	
	Extended timer (ET)*1	ET000 to ET7FF	
	Extended counter (EC)*1	EC000 to EC7FF	
	Extended link relay (EL)	EL0000 to EL1FFF	
	Extended edge detection (EP)	EP000 to EPFFF	
	Extended input 2 (GX)*1*3	GX0000 to GXFFFF	
	Extended output 2 (GY)*1*3	GY0000 to GYFFFF	
	Extended internal relay (GM)*3	GM0000 to GMFFFF	
	The bit specification of the word device (except extended buffer register, setup value register)	Setting range of each word device	
Word device	Data register (D)	D0000 to D2FFF	Hexadecimal
	Link register (R)	R0000 to R07FF	
	Current value register (N)	N0000 to N01FF	
	Special register (S)	S0000 to S03FF	
	File register (B)	B0000 to B1FFF	
	Extended present value register (EN)	EN0000 to EN07FF	
	Extended setup value register (H)	H0000 to H07FF	
	Extended special register (ES)	ES0000 to ES07FF	
	Extended data register (U)	U0000 to U7FFF	
	Extended buffer register (EB)*3	EB00000 to EB07FFF EB08000 to EB0FFFF EB10000 to EB17FFF EB18000 to EB1FFFF	
	Setup value register (TCS)*2	TCS0000 to TCS01FF	
	The word specification of the bit device	Setting range of each bit device	

*1 Overlapped device designation of an input (X, EX, GX) and an output (Y, EY, GY), or a timer (T, ET) and a counter (C, EC) is not allowed.(Example: X0000 and Y0000, EX0000 and EY0000)

*2 To store a setting value of T (timer) or C (counter), use TCS.
Setting value of a timer and a counter is stored in TCS.
(TCS cannot be used if a timer or a counter is not in a program.)

*3 GX, GY, GM and EB can be used only in the PC3JG separate mode.
Access to GX, GY, GM and EB through a link module is not possible.

8.7 Precautions

■1. Station No. settings of the PLC side

In the system configuration, the PLC with the station number set with the host address must be included.For details of host address setting, refer to the following.

➠ 8.4.1 Setting communication interface (Communication settings)

■2. GOT clock control

The GOT clock function is available only for the PLC with the station number set with the host address.
For details of host address setting, refer to the following.

➠ 8.4.1 Setting communication interface (Communication settings)

■3. System configuration

If the system is configured by mixing the PC3J extended function compliant PLC with the PC3J extended function incompliant PLC, normal communication may not be performed.Unify the PLCs into PC3J extended function compliant or PC3J extended function incompliant to configure the system.

■4. System alarm

The system alarm can be displayed only for the PLC set with a host address.When connected to the PC3J extended function compliant PLC, only the system alarm of program No. 1 can be displayed.

9. CONNECTION TO SHARP PLC

9.1 Connectable Model List . . . . . 9 - 2
9.2 System Configuration . . . . . 9 - 3
9.3 Connection Diagram. . . . . 9 - 7
9.4 GOT Side Settings . . . . . 9 - 10
9.5 PLC Side Setting. . . . . 9 - 12
9.6 Device Range that Can Be Set. . . . . 9 - 19

9. CONNECTION TO SHARP PLC

9.1 Connectable Model List

The following table shows the connectable models.

Model name	Clock	Communication Type	Connectable GOT	Refer to
JW-21CU	×	RS-422	GT27 GT25 GT23	➠ 9.2.1
JW-22CU	○	RS-232 RS-422		
JW-31CUH	×	RS-422	GT27 GT25 GT23	➠ 9.2.2
JW-32CUH	○	RS-232 RS-422		
JW-33CUH	○			
JW-50CUH	×	RS-422	GT27 GT25 GT23	➠ 9.2.3
JW-70CUH	○*1	RS-232 RS-422		
JW-100CUH	○*1			
JW-100CU	○			
Z-512J	○	RS-232 RS-422	GT27 GT25 GT23	➠ 9.2.4

*1 When the link unit (ZW-10CM) is used in JW-70CUH/100CUH, the clock function is not available.

9.2 System Configuration

9.2.1 Connecting to JW-21CU or JW-22CU

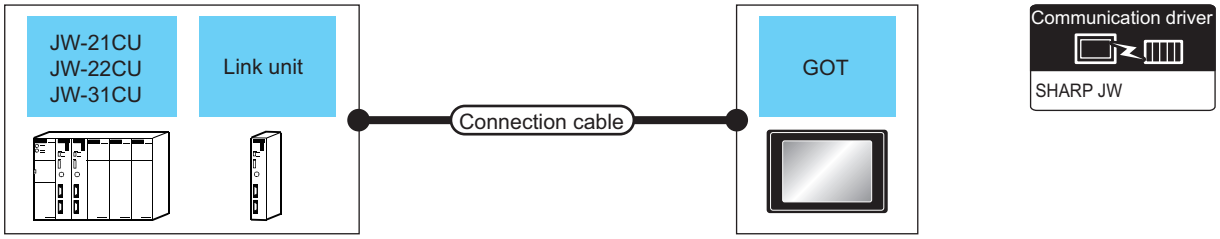

PLC			Connection cable	Max. distance	GOT		Number of connectable equipment
Model name	Link unit*1	Communication Type	Cable model Connection diagram number		Option device	Model	
JW-22CU	-	RS-232	GT09-C30R20601-15P(3m) or User preparing RS-232 connection diagram 1)	Differs according to PLC side specifications.	- (Built into GOT)	GT27 GT25 GT23	1 GOT for 1 PLC
					GT15-RS2-9P	GT27 GT25	
			GT09-C30R40601-15P(3m) GT09-C100R40601-15P(10m) GT09-C200R40601-15P(20m) GT09-C300R40601-15P(30m) or User preparing RS-422 connection diagram 1)	Differs according to PLC side specifications.	- (Built into GOT)	GT27 GT25 GT23	
					GT15-RS4-9S	GT27 GT25	
JW-21CU JW-22CU	JW-21CM	RS-422	GT09-C30R40603-6T(3m) GT09-C100R40603-6T(10m) GT09-C200R40603-6T(20m) GT09-C300R40603-6T(30m) or User preparing RS-422 connection diagram 3)	Differs according to PLC side specifications.	- (Built into GOT)	GT27 GT25 GT23	
					GT15-RS4-9S	GT27 GT25	

*1 The link unit is a product manufactured by SHARP Corporation.
For details of this product, contact SHARP Corporation.

9.2.2 Connecting to JW-31CUH, JW-32CUH or JW-33CUH

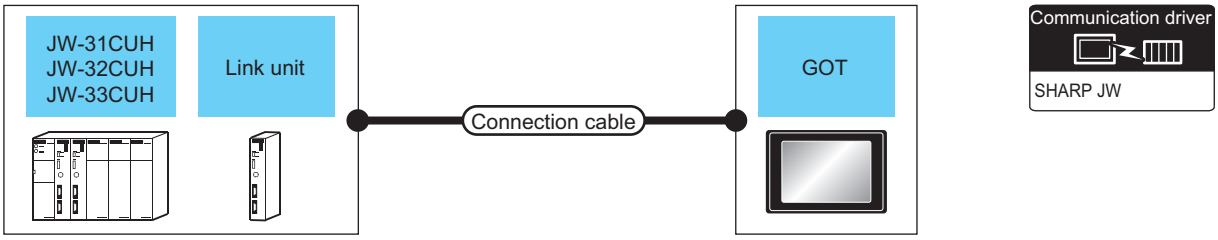

PLC			Connection cable	Max. distance	GOT		Number of connectable equipment
Model name	Link unit*1	Communication Type	Cable model Connection diagram number		Option device	Model	
JW-32CUH JW-33CUH	-	RS-232	GT09-C30R20602-15P(3m) or User preparing RS-232 connection diagram 2)	Differs according to PLC side specifications.	- (Built into GOT)	GT27 GT25 GT23	1 GOT for 1 PLC
					GT15-RS2-9P	GT27 GT25	
		RS-422	GT09-C30R40602-15P(3m) GT09-C100R40602-15P(10m) GT09-C200R40602-15P(20m) GT09-C300R40602-15P(30m) or User preparing RS-422 connection diagram 2)	Differs according to PLC side specifications.	- (Built into GOT)	GT27 GT25 GT23	
					GT15-RS4-9S	GT27 GT25	
JW-31CUH JW-32CUH JW-33CUH	JW-21CM	RS-422	GT09-C30R40603-6T(3m) GT09-C100R40603-6T(10m) GT09-C200R40603-6T(20m) GT09-C300R40603-6T(30m) or User preparing RS-422 connection diagram 3)	Differs according to PLC side specifications.	- (Built into GOT)	GT27 GT25 GT23	
					GT15-RS4-9S	GT27 GT25	

*1 Use the link unit supporting JW-31CUH, JW-32CUH or JW-33CUH.
The link unit is a product manufactured by SHARP Corporation.
For details of this product, contact SHARP Corporation.

9.2.3 Connecting to JW-50CUH, JW-70CUH, JW-100CUH or JW-100CU

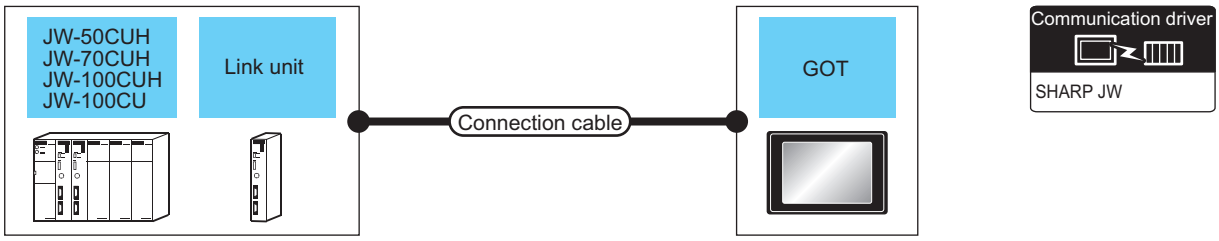

PLC			Connection cable	Max. distance	GOT		Number of connectable equipment
Model name	Link unit*1	Communication Type	Cable model Connection diagram number		Option device	Model	
JW-70CUH JW-100CUH JW-100CU	-	RS-232	GT09-C30R20601-15P(3m) or User preparing RS-232 connection diagram 1)	Differs according to PLC side specifications.	- (Built into GOT)	GT27 GT25 GT23	1 GOT for 1 PLC
					GT15-RS2-9P	GT27 GT25	
		RS-422	GT09-C30R40601-15P(3m) GT09-C100R40601-15P(10m) GT09-C200R40601-15P(20m) GT09-C300R40601-15P(30m) or User preparing RS-422 connection diagram 1)	Differs according to PLC side specifications.	- (Built into GOT)	GT27 GT25 GT23	
					GT15-RS4-9S	GT27 GT25	
JW-50CUH JW-70CUH JW-100CUH JW-100CU	JW-10CM ZW-10CM	RS-422	GT09-C30R40603-6T(3m) GT09-C100R40603-6T(10m) GT09-C200R40603-6T(20m) GT09-C300R40603-6T(30m) or User preparing RS-422 connection diagram 3)	Differs according to PLC side specifications.	- (Built into GOT)	GT27 GT25 GT23	
					GT15-RS4-9S	GT27 GT25	

*1 The link unit is a product manufactured by SHARP Corporation.
For details of this product, contact SHARP Corporation.

9.2.4 Connecting to Z-512J

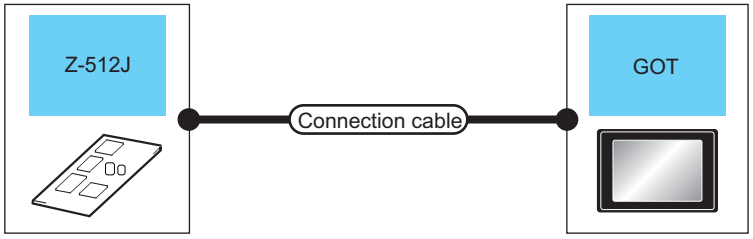

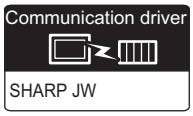

PLC		Connection cable	Max. distance	GOT		Number of connectable equipment
Model name	Communication Type	Cable model Connection diagram number		Option device	Model	
Z-512J	RS-232	GT09-C30R20602-15P(3m) or User preparing RS-232 connection diagram 2)	Differs according to PLC side specifications.	- (Built into GOT)	GT27 GT25 GT23	1 GOT for 1 PLC
				GT15-RS2-9P	GT27 GT25	
	RS-422	GT09-C30R40602-15P(3m) GT09-C100R40602-15P(10m) GT09-C200R40602-15P(20m) GT09-C300R40602-15P(30m) or User preparing RS-422 connection diagram 2)	Differs according to PLC side specifications.	- (Built into GOT)	GT27 GT25 GT23	
				GT15-RS4-9S	GT27 GT25	

9.3 Connection Diagram

The following diagram shows the connection between the GOT and the PLC.

9.3.1 RS-232 cable

■1. Connection diagram

(1) RS-232 connection diagram 1)

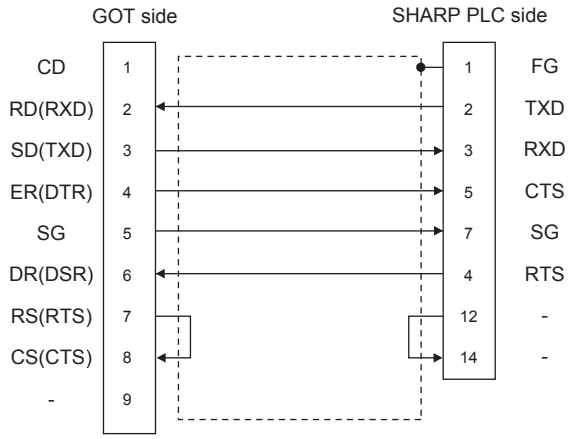

*1 GT27: CD, GT23: NC

(2) RS-232 connection diagram 2)

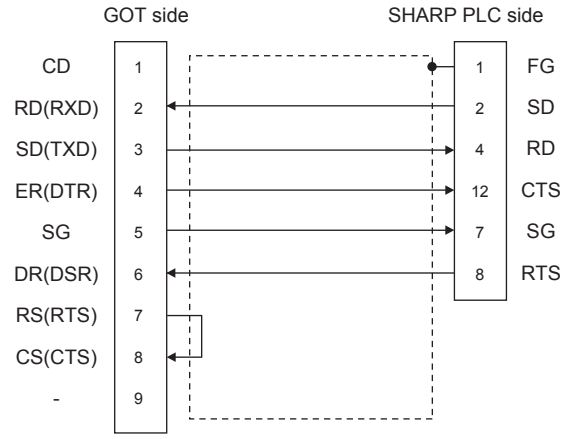

*1 GT27: CD, GT23: NC

■2. Precautions when preparing a cable

(1) Cable length

The maximum length of the RS-232 cable differs according to the specifications of the SHARP PLC.
For details, refer to the following manual.

➠ SHARP PLC user's Manual

(2) GOT side connector

For the GOT side connector, refer to the following.

➠ 1.4.1 GOT connector specifications

(3) SHARP PLC side connector

Use the connector compatible with the SHARP PLC side module.
For details, refer to the SHARP PLC user's manual.

9.3.2 RS-422 cable

■1. Connection diagram

(1) RS-422 connection diagram 1)

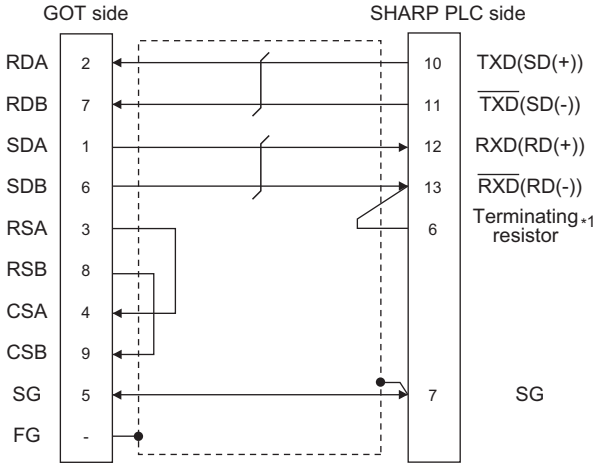

*1 Connect the terminating resistor at pin 6 with pin 13 (RXD) only at the terminal station.
(Valid for JW-70CUH and JW-100CUH. The terminating resistor does not exist in JW-22CU and JW-100CU.)

(2) RS-422 connection diagram 2)

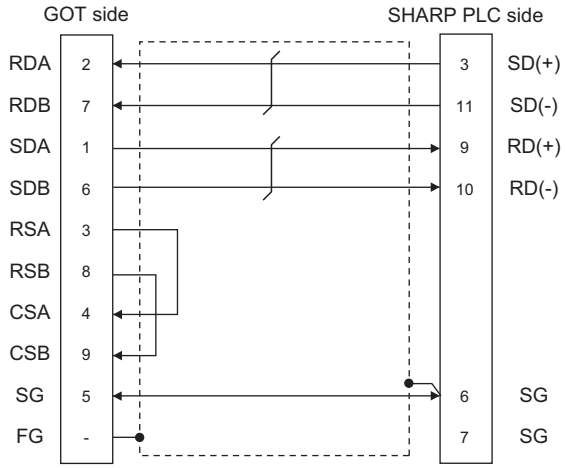

(3) RS-422 connection diagram 3)

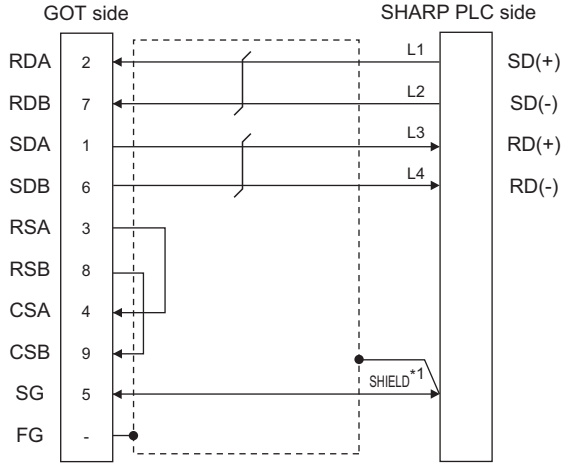

*1 Two SHIELD terminals are provided for JW-10CM and ZW-10CM.Connect to either SHIELD terminal.

■2. Precautions when preparing a cable

(1) Cable length

The maximum length of the RS-422 cable differs according to the specifications of the SHARP PLC.
For details, refer to the following manual.

➠ SHARP PLC user's Manual

(2) GOT side connector

For the GOT side connector, refer to the following.

➠ 1.4.1 GOT connector specifications

(3) SHARP PLC side connector

Use the connector compatible with the SHARP PLC side module.
For details, refer to the SHARP PLC user's manual.

■3. Connecting terminating resistors

(1) GOT side

Set the terminating resistor setting switch of the GOT main unit to "Disable".
For the procedure to set the terminating resistor, refer to the following.

➠ 1.4.3 Terminating resistors of GOT

(2) SHARP PLC side

Connect the terminating resistor on the SHARP PLC side when connecting a GOT to a SHARP PLC.
The PLC CPUs and the modules on the PLC CPU side requiring a terminating resistor are shown below.

(a) JW-22CU

Turn "ON" the terminating resistor setting switch (SW1) on the back of JW-22CU to validate the terminating resistor.

(b) JW-70CUH and JW-100CUH

Connect the pin 6 (terminating resistor) of the communication port connection connector with the pin 13 (RXD) only at the terminal station to validate the terminating resistor.

(c) JW-21CM, JW-10CM and ZW-10CM

Turn "ON" the terminator switch (SW7) on the front panel only at the terminal station to validate the terminating resistor.

9.4 GOT Side Settings

9.4.1 Setting communication interface (Communication settings)

Set the channel of the equipment to be connected to the GOT.

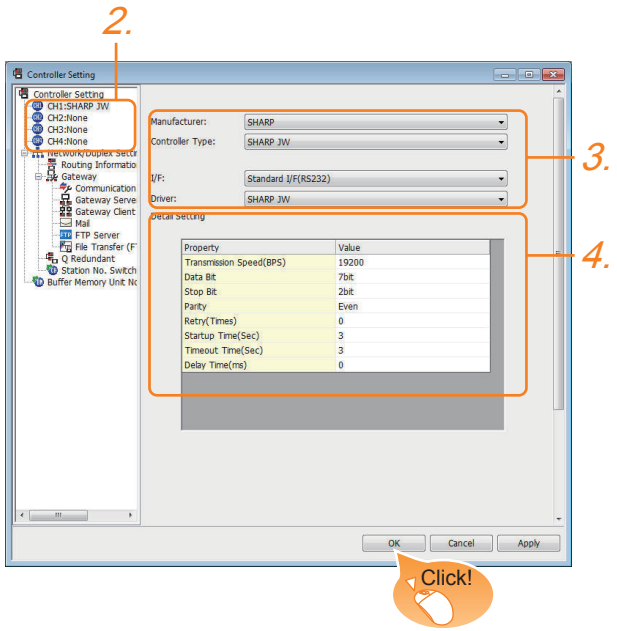

Step 1. Select [Common] → [Controller Setting] from the menu.

Step 2. The Controller Setting window is displayed. Select the channel to be used from the list menu.

Step 3. Set the following items.
- Manufacturer: SHARP
- Controller Type: SHARP JW
- I/F: Interface to be used
- Driver: SHARP JW

Step 4. The detailed setting is displayed after Manufacturer, Controller Type, I/F, and Driver are set. Make the settings according to the usage environment.

➠ 9.4.2 Communication detail settings

Click the [OK] button when settings are completed.

POINT

The settings of connecting equipment can be confirmed in [I/F Communication Setting]. For details, refer to the following.

➠ 1.1.2 I/F communication setting

9.4.2 Communication detail settings

Make the settings according to the usage environment.

Property	Value
Transmission Speed(BPS)	19200
Data Bit	7 bit
Stop Bit	2 bit
Parity	Even
Retry(Times)	0
Startup Time(Sec)	3
Timeout Time(Sec)	3
Delay Time(ms)	0

Item	Description	Range
Transmission Speed	Set this item when change the transmission speed used for communication with the connected equipment. (Default: 19200bps)	4800bps, 9600bps, 19200bps
Data Bit	Set this item when change the data length used for communication with the connected equipment. (Default: 7bits)	7bit (fixed)
Stop Bit	Specify the stop bit length for communications. (Default: 2bit)	2bit (fixed)
Parity	Specify whether or not to perform a parity check, and how it is performed during communication. (Default: Even)	Even (fixed)
Retry	Set the number of retries to be performed when a communication error occurs. (Default: 0time)	0 to 5times
Startup Time	Specify the time period from the GOT startup until GOT starts the communication with the PLC CPU. (Default: 3sec)	3 to 30sec
Timeout Time*1	Set the time period for a communication to time out. (Default: 3sec)	3 to 30sec
Delay Time	Set this item to adjust the transmission timing of the communication request from the GOT. (Default: 0ms)	0 to 300ms

*1 When connecting to the communication port, set "Delay Time" of the GOT side to 30ms or more.

POINT

(1) Communication interface setting by the Utility
The communication interface setting can be changed on the Utility's [Communication Settings] after writing [Communication Settings] of project data.
For details on the Utility, refer to the following manual.

➠ GOT2000 Series User's Manual (Utility)

(2) Precedence in communication settings
When settings are made by GT Designer3 or the Utility, the latest setting is effective.

9.5 PLC Side Setting

POINT

SHARP PLC

For details of the SHARP PLC, refer to the following manual.

➠ SHARP PLC user's Manual

Model name		Refer to
PLC CPU	JW-22CU	9.5.1
	JW-32CUH, JW-33CUH	9.5.2
	JW-70CUH, JW-100CUH, JW-100CU	9.5.1
	Z-512J	9.5.2
Link unit	JW-21CM	9.5.3
	JW-10CM, ZW-10CM	9.5.4

9.5.1 Connecting to JW-22CU, JW-70CUH, JW-100CUH or JW-100CU

■1. System memory setting

Set the system memory.

System memory No.	Item	Set value
#236	Transmission speed, parity and stop bit	D7 D6 D5 D4 D3 D2 to D0 0 0 (3) (2) (1) (1) Transmission speed *1 *2 000: 19200bps 001: 9600bps 010: 4800bps (2) Parity 10 (fixed): Even (3) Stop bit 1 (fixed): 2 bits
#237	Station No.	1: Station No. 1 (fixed)

*1 Indicates only the transmission speeds that can be set on the GOT side.

*2 Set the same transmission speed of the GOT.
For the transmission speed setting on the GOT side, refer to the following.

9.4.1 Setting communication interface (Communication settings)

■2. Terminating resistor setting switch (For JW-22CU only)

Set the terminating resistor setting switch.

(1) When using KV-L20R or KV-L20

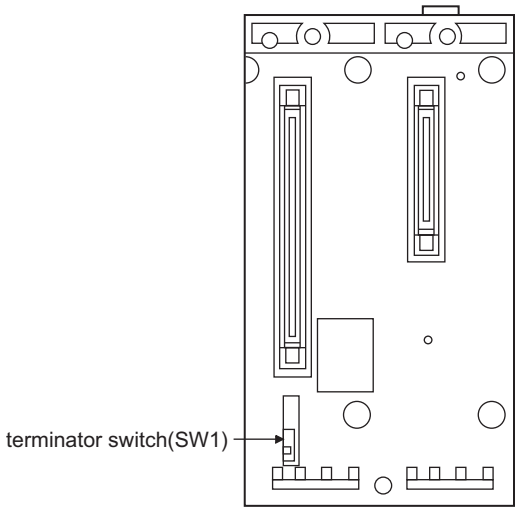

Settings	
For RS-232 communication	RS-422 communication
OFF (no terminating resistor)	ON (terminating resistor attached)

9.5.2 Connecting to JW-32CUH, JW-33CUH or Z-512J

■1. Settings for connecting to communication port 1 (PG/COMM1 port)

Set the system memory.

System memory No.	Item	Set value
#234	Transmission speed, parity and stop bit	D7 D6 D5 D4 D3 D2 to D0 0 0 (3) (2) (1) (1) Transmission speed *1 *2 000: 19200bps 001: 9600bps 010: 4800bps (2) Parity 10 (fixed): Even (3) Stop bit 1 (fixed): 2 bits
#235	Station No.	1: Station No. 1 (fixed)

*1 Indicates only the transmission speeds that can be set on the GOT side.

*2 Set the same transmission speed of the GOT.
For the transmission speed setting on the GOT side, refer to the following.

➠ 9.4.1 Setting communication interface (Communication settings)

■2. Settings for connecting to communication port 2 (PG/COMM2 port)

Set the system memory.

System memory No.	Item	Set value
#236	Transmission speed, parity and stop bit	D7 D6 D5 D4 D3 D2 to D0 0 0 (3) (2) (1) (1) Transmission speed *1 *2 000: 19200bps 001: 9600bps 010: 4800bps (2) Parity 10 (fixed): Even (3) Stop bit 1 (fixed): 2 bits
#237	Station No.	1: Station No. 1 (fixed)

*1 Indicates only the transmission speeds that can be set on the GOT side.

*2 Set the same transmission speed of the GOT.
For the transmission speed setting on the GOT side, refer to the following.

➠ 9.4.1 Setting communication interface (Communication settings)

9.5.3 Connecting to the link unit (JW-21CM)

■1. Switch setting of the link unit (JW-21CM)

Make setting for each switch.

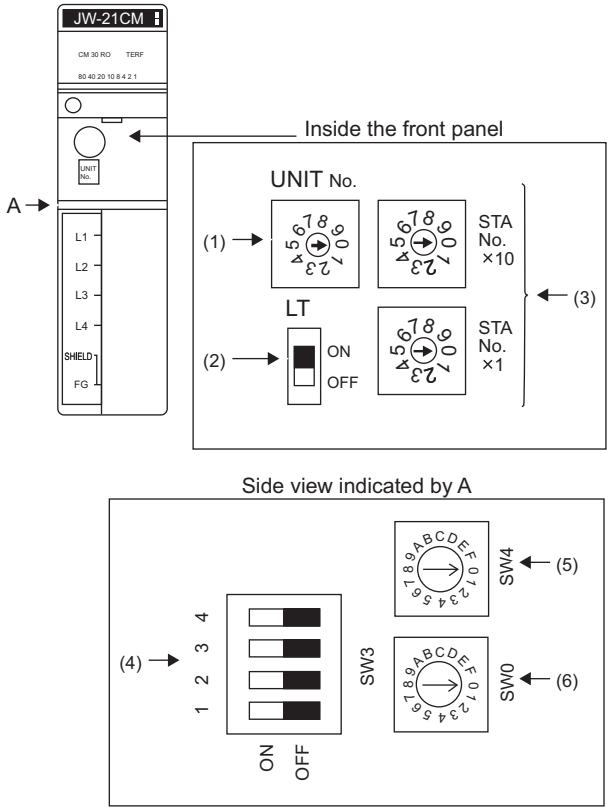

(1) Module No. switch (SW8)

The module No. switch is not used for communication with the GOT.

(2) Terminator switch(SW7)

Settings	Setting details
ON*1	Terminating resistor validated

*1 Turn on only for the terminal station.

(3) Station number setting switch(SW1,SW2)

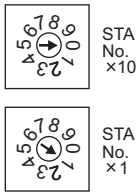

Switch No.	Settings	Setting details
SW1	Station No. lower digit (10^0 digit)	1 (fixed)
SW2	Station No. upper digit (10^1 digit)	0 (fixed)

(4) Operation mode setting switch(SW3)

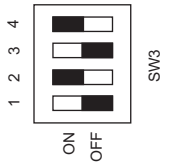

Switch No.	Settings	Setting details
SW3-1	OFF (fixed)	Invalid
SW3-2	ON (fixed)	4-wire type
SW3-3	OFF (fixed)	Invalid
SW3-4	ON (fixed)	Even

(5) Transmission speed setting switch (SW4)

Set the same transmission speed of the GOT.
For the transmission speed setting on the GOT side, refer to the following.

➠ 9.4.1 Setting communication interface (Communication settings)

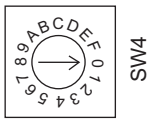

Setting*1	Setting details
0	19200bps
1	9600bps
2	4800bps

*1 Indicates only the transmission speeds that can be set on the GOT side.

(6) Function setting switch(SW0)

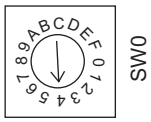

Settings	Setting details
4 (fixed)	Computer link

9.5.4 Connecting to the link unit (JW-10CM or ZW-10CM)

■1. Switch setting of link unit (JW-10CM and ZW-10CM)

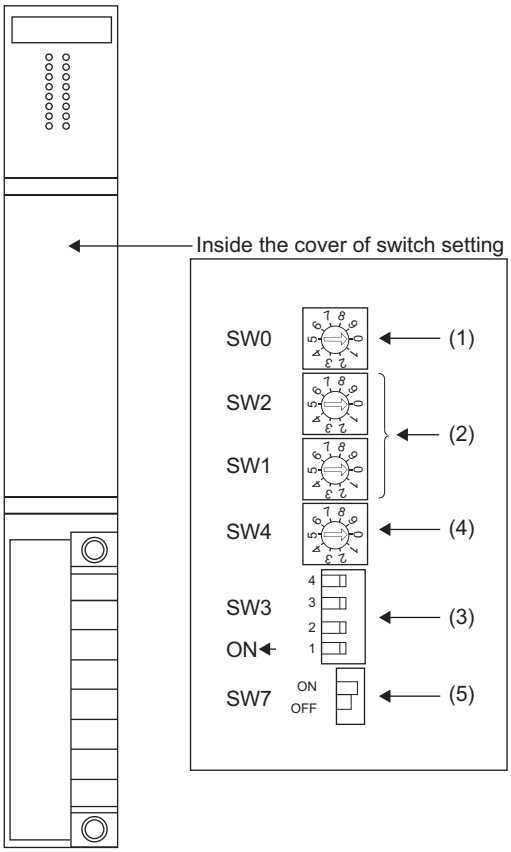

(1) Function setting switch(SW0)

SW0

Settings	Setting details
4 (fixed)	Computer link (command mode)

(2) Station number switch(SW1,SW2)

SW2

SW1

Switch No.	Settings	Setting details
SW1	Station No. lower digit (10^0 digit)	1 (fixed)
SW2	Station No. upper digit (10^1 digit)	0 (fixed)

(3) Operation mode setting switch(SW3)

SW3

Switch No.	Settings	Setting details
SW3-1	OFF (fixed)	Invalid
SW3-2	ON (fixed)	4-wire type
SW3-3	OFF (fixed)	Invalid
SW3-4	ON (fixed)	Even

(4) Transmission speed setting switch (SW4)

Set the same transmission speed of the GOT.
For the transmission speed setting on the GOT side, refer to the following.

➠ 9.4.1 Setting communication interface (Communication settings)

SW4

Setting*1	Setting details
0	19200bps
1	9600bps
2	4800bps

*1 Indicates only the transmission speeds that can be set on the GOT side.

(5) Terminator switch(SW7)

SW7

Settings	Setting details
ON*2	Terminating resistor validated

*1 Set to ON only for the terminal station.

9.6 Device Range that Can Be Set

The device ranges of controller that can be used for GOT are as follows.
Note that the device ranges in the following tables are the maximum values that can be set in GT Designer3.
The device specifications of controllers may differ depending on the models, even though belonging to the same series.
Please make the setting according to the specifications of the controller actually used.
When a non-existent device or a device number outside the range is set, other objects with correct device settings may not be monitored.

■1. Setting item

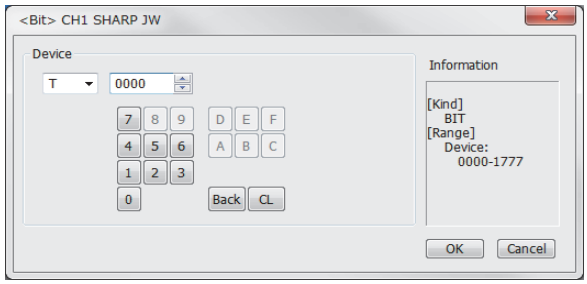

Item	Description
Device	Set the device name, device number, and bit number. The bit number can be set only when specifying the bit of word device.
Information	Displays the device type and setting range which are selected in [Device].

POINT

(1) Device settings of SHARP PLC

(a) When setting a register as a bit device

- Registers
  Set the type (first 2 digits) and the address.

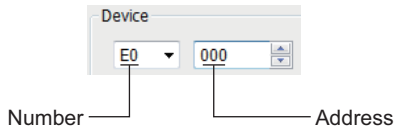

- File register
  Set the file number and the address.

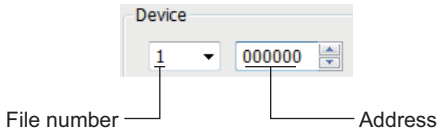

(b) When setting a register and memory as a word device.

- I/O relay
  Set a combination of the device address (multiple of 16)+bit address format (fixed to 0).

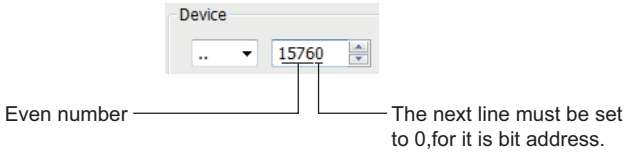

- Registers and file register
  Set the device address (multiple of 16).

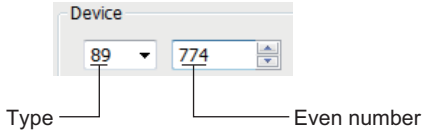

(2) Monitoring the timer (T) and the counter (C)

(a) Address setting

Be sure not to set the same address range for the timer (T) and the counter (C).
Even if these addresses are overlapped, GOT displays no error.
GOT monitors them according to the address instead of the device name.
Therefore, if a device which is invalid for the SHARP PLC side parameter is set using GT Designer3, GOT monitors other device (a device corresponding to the address range of the set device).
Example:

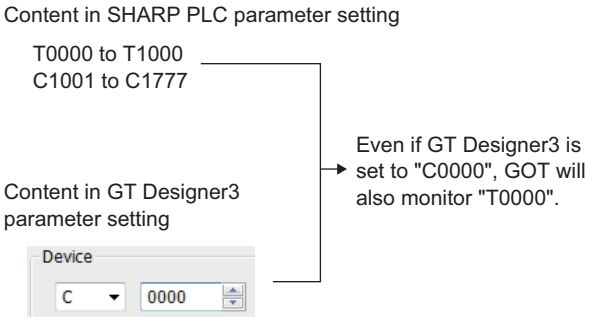

(b) Contact writing into timer (T) and the counter (C)

Writing the contact for the timer (T) and the counter (C) can only be done while the CPU is in RUN (while the timer and counter is in operation).

9.6.1 SHARP PLC (SHARP JW)

Device name		Setting range	Device No. representation
Bit device	I/O relay	..00000 to ..15777 ..20000 to ..75777	Octal
	Timer (Contact) (T)	T0000 to T1777	
	Counter (Contact) (C)	C0000 to C1777	
	The bit specification of the word device	Setting range of each word device	-
Word device	Timer (Current value) (T)	T0000 to T1777	Octal
	Counter (Current value) (C)	C0000 to C1777	
	Register (09 to E7)	09000 to 09776	
		19000 to 19776	
		29000 to 29776	
		39000 to 39776	
		49000 to 49776	
		59000 to 59776	
		69000 to 69776	
		79000 to 79776	
		89000 to 89776	
		99000 to 99776	
		E0000 to E0776	
		E1000 to E1776	
		E2000 to E2776	
		E3000 to E3776	
		E4000 to E4776	
		E5000 to E5776	
		E6000 to E6776	
		E7000 to E7776	
	File register (1 to 7)	1000000 to 1177776 2000000 to 2177776 3000000 to 3177776 4000000 to 4177776 5000000 to 5177776 6000000 to 6177776 7000000 to 7177776	

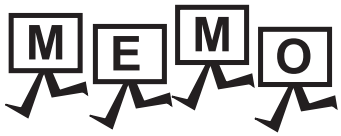
MEMO

10. CONNECTION TO SHINKO TECHNOS INDICATING CONTROLLER

CONNECTION TO SHINKO TECHNOS INDICATING CONTROLLER

10.1 Connectable Model List . . . . . 10 - 2
10.2 System Configuration . . . . . 10 - 3
10.3 Connection Diagram. . . . . 10 - 8
10.4 GOT Side Settings . . . . . 10 - 15
10.5 Indicating Controller Side Setting. . . . . 10 - 17
10.6 Device Range that Can Be Set. . . . . 10 - 20
10.7 Precautions . . . . . 10 - 22

10. CONNECTION TO SHINKO TECHNOS INDICATING CONTROLLER

10.1 Connectable Model List

The following table shows the connectable models.

Series	Model name	Clock	Communication Type	Connectable GOT	Refer to
ACS-13A Series	ACS-13A□/□,□,C5*2	×	RS-232 RS-485	GT27 GT25 GT23	10.2.1
JC Series	JCS-33A-□/□□,C5*2	×	RS-232 RS-485	GT27 GT25 GT23	10.2.1
	JCR-33A-□/□□,C5*2				
	JCD-33A-□/□□,C5*2				
JCM-33A Series	JCM-33A□/□,□C5*2	×	RS-232 RS-485	GT27 GT25 GT23	10.2.1
JIR-301-M Series	JIR-301-M□,C5*2	×	RS-232 RS-485	GT27 GT25 GT23	10.2.1
PCD-300 Series	PCD-33A-□/M,C5*2	×	RS-232 RS-485	GT27 GT25 GT23	10.2.1
PC-900 Series	PC935-□/M,C5*2	×	RS-232 RS-485	GT27 GT25 GT23	10.2.1
	PC955-□/M,C5*2				
	PC935-□/M,C*1	×	RS-232	GT27 GT25 GT23	10.2.2
	PC955-□/M,C*1				
FCD-100 Series*1	FCD-13A-□/M,C	×	RS-232	GT27 GT25 GT23	10.2.2
	FCD-15A-□/M,C				
FCR-100 Series*1	FCR-13A-□/M,C	×	RS-232	GT27 GT25 GT23	10.2.2
	FCR-15A-□/M,C				
FCR-23A Series*1	FCR-23A-□/M,C	×	RS-232	GT27 GT25 GT23	10.2.2
	FCR-23A-□/M,C5			GT27 GT25 GT23	
FIR Series*1	FIR-201-M,C	×	RS-232	GT27 GT25 GT23	10.2.2
DCL-33A Series	DCL-33A-□/M,□,C5*2	×	RS-232 RS-485	GT27 GT25 GT23	10.2.3

*1 Only the indicating controller equipped with RS-232 communication function can be connected.

*2 The indicating controller of the following version or later can be connected.

Series	Model name	Version
ACS-13A Series	ACS-13A□/□,□,C5	Products manufactured in October 2007 or later (Indicating controllers with the serial numbers 07Axxxxxx, 07Kxxxxxx, and 07Xxxxxxx or later) (The first two digits of the serial numbers show the last two digits of the year.)
JC Series	JCS-33A-□/□□,C5	
	JCR-33A-□/□□,C5	
	JCD-33A-□/□□,C5	
JCM-33A Series	JCM-33A-□/□,□C5	
JIR-301-M Series	JIR-301-M□,C5	
PCD-300 Series	PCD-33A-□/M,C5	
PC-900 Series	PC935-□/M,C5	
	PC955-□/M,C5	
DCL-33A Series	DCL-33A-□/M,□,C5	

10.2.1 Connecting to ACS-13A, JC, JCM-33A, JIR-301-M, PCD-300 Series, PC-900 Series (PC-955-[ ]/M,C5, PC-935-[ ]/M,C5)

■1. For the RS-232 connection (via interface converter)

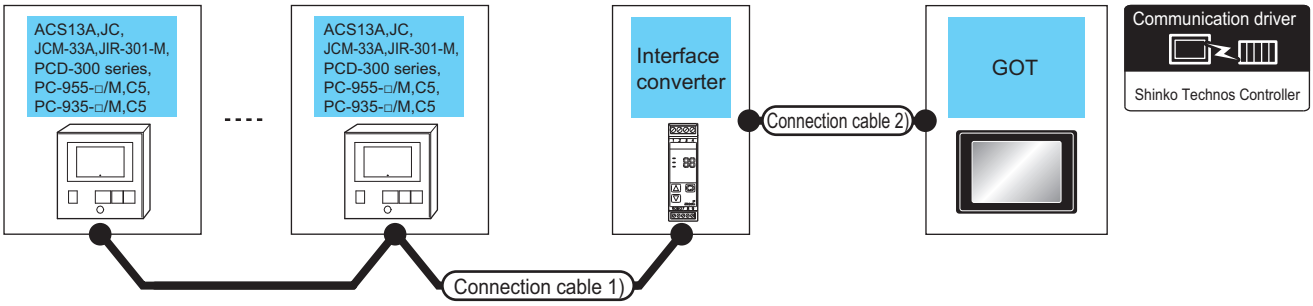

Indicating controller		Connection cable 1)		Communication converter*1	Connection cable 2)		GOT		Number of connectable equipment
Model name	Communication Type	Cable model Connection diagram number	Max. distance		Cable model Connection diagram number	Max. distance	Option device	Model	
ACS13A JC JCM-33A JIR-301-M PCD-300 Series PC-955-□/M,C5 PC-935-□/M,C5	RS-232	User preparing RS-485 connection diagram 1)	1,200m	IF-400	RS-232C CFP-C2*1	15m	- (Built into GOT)	GT27 GT25 GT23	31 indicating controllers for 1 GOT
							GT15-RS2-9P	GT27 GT25	

*1 The communication converter is a product manufactured by Shinko Technos Co., Ltd.For details of the product, contact Shinko Technos Co., Ltd.

■2. For the RS-485 connection

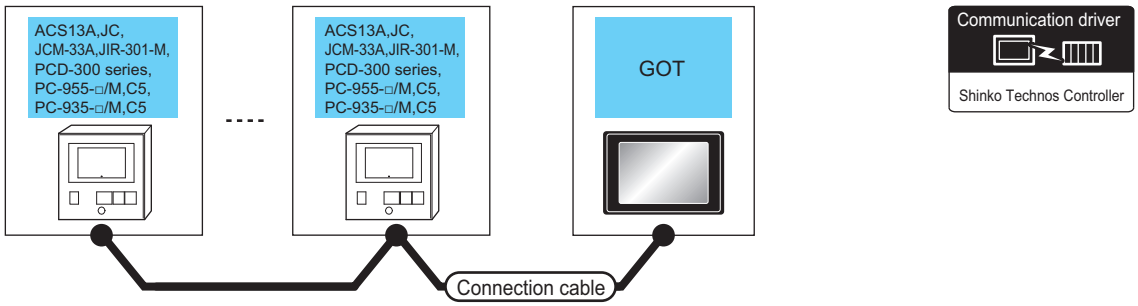

Indicating controller		Connection cable		GOT		Number of connectable equipment
Model name	Communication Type	Cable model Connection diagram number	Max. distance	Option device	Model	
ACS13A JC JCM-33A JIR-301-M PCD-300 Series PC-955-□/M,C5 PC-935-□/M,C5	RS-485	User preparing RS-485 connection diagram 7)	500m	- (Built into GOT)	GT27 GT25 GT23	31 indicating controllers for 1 GOT
		User preparing RS-485 connection diagram 2)	500m	GT15-RS4-TE	GT27 GT25	
		User preparing RS-485 connection diagram 6)	500m	FA-LTBGT2R4CBL05 (0.5m) FA-LTBGT2R4CBL10 (1m) FA-LTBGT2R4CBL20 (2m)	GT27 GT25 GT23	

10.2.2 Connecting to FCD-100, FCR-100, FCR-23A, FIR Series, PC-900 Series (PC-955[ ]/M,C, PC-935-[ ]/M,C)

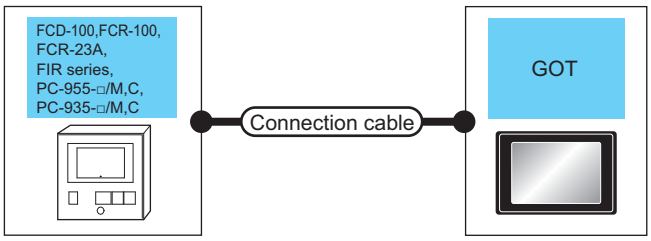

Indicating controller*1		Connection cable		GOT		Number of connectable equipment
Model name	Communication Type	Cable model Connection diagram number	Max. distance	Option device	Model	
FCD-100 FCR-100 FCR-23A FIR Series PC-955-□/M,C PC-935-□/M,C	RS-232	GT09-C30R21401-4T(3m) or User preparing RS-232 connection diagram 1)	15m	- (Built into GOT)	GT27 GT25 GT23	31 indicating controllers for 1 GOT
				GT15-RS2-9P	GT27 GT25	

*1 Only the indicating controller equipped with RS-232 communication function can be connected.

10.2.3 When connecting to DCL-33A Series

■1. For the RS-232 connection (via communication converter)

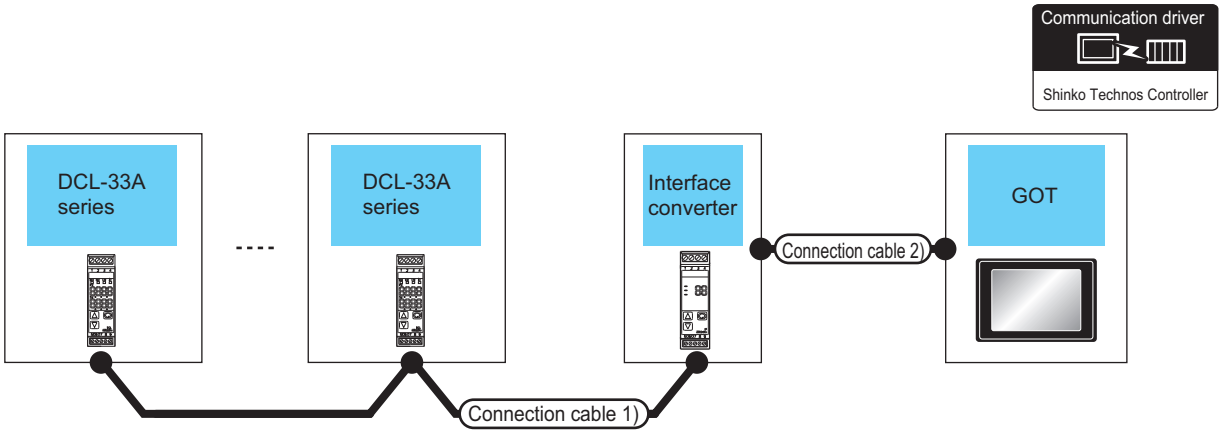

Indicating controller		Connection cable 1)		Communication converter*1	Connection cable 2)		GOT		Number of connectable equipment
Model name	Communication Type	Cable model Connection diagram number	Max. distance		Cable model Connection diagram number	Max. distance	Option device	Model	
DCL-33A Series	RS-232	RS485-CPP *1	1,200m	IF-400	RS-232CCFP-C2 *1	15m	- (Built into GOT)	GT27 GT25 GT23	31 indicating controllers for 1 GOT
							GT15-RS2-9P	GT27 GT25	

*1 Product manufactured by Shinko Technos Co., Ltd.For details of the product, contact Shinko Technos Co., Ltd.

■2. For the RS-485 connection

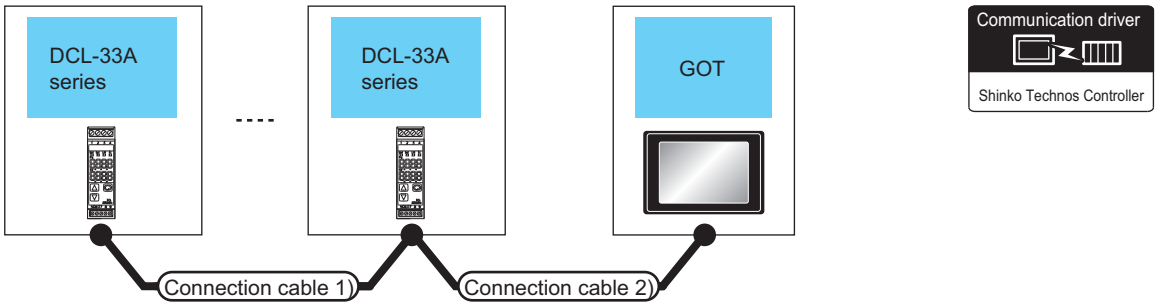

Indicating controller		Connection cable 1)	Connection cable 2)	Max. distance	GOT		Number of connectable equipment
Model name	Communication Type	Cable model Connection diagram number	Cable model Connection diagram number		Option device	Model	
DCL-33A Series	RS-485	RS-485 CPP*1	User preparing RS-485 connection diagram 5)	500m	- (Built into GOT)	GT27 GT25 GT23	31 indicating controllers for 1 GOT
			User preparing RS-485 connection diagram 3)	500m	GT15-RS4-TE	GT27 GT25	
			User preparing RS-485 connection diagram 4)	500m	FA-LTBGT2R4CBL05 (0.5m) FA-LTBGT2R4CBL10 (1m) FA-LTBGT2R4CBL20 (2m)	GT27 GT25 GT23	

*1 Product manufactured by Shinko Technos Co., Ltd.For details of the product, contact Shinko Technos Co., Ltd.

10.3 Connection Diagram

The following diagram shows the connection between the GOT and the PLC.

10.3.1 RS-232 cable

■1. Connection diagram

(1) RS-232 connection diagram 1)

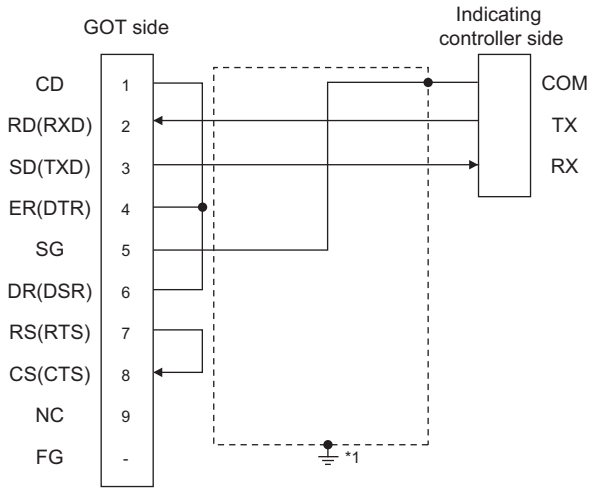

*1 Connect FG grounding to the appropriate part of a cable shield line.

■2. Precautions when preparing a cable

(1) Cable length

The length of the RS-232 cable must be 15m or less.

(2) GOT side connector

For the GOT side connector, refer to the following.

➠ 1.4.1 GOT connector specifications

(3) Shinko Technos indicating controller side connector

Use the connector compatible with the Shinko Technos indicating controller side.
For details, refer to the user's manual of the Shinko Technos indicating controller.

10.3.2 RS-485 cable

■1. Connection diagram

(1) RS-485 connection diagram 1)

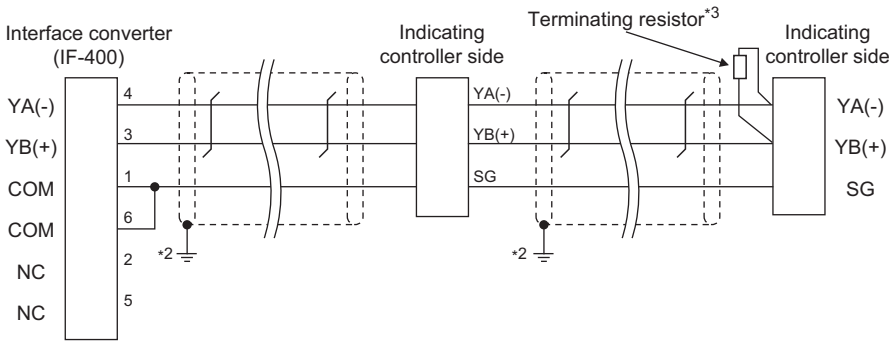

*1 Pin No. of communication converter differs depending on the model.
Refer to the following table.
*2 Connect FG grounding to the appropriate part of a cable shield line.
*3 For details of the terminating resistor specifications, refer to the following manual.

➠ User's Manual of the Shinko Technos indicating controller

Signal name	Model of indicating controller								
	JCS-33A	JCR-33A	JCD-33A	JCM-33A	JIR-301-M	ACS-13A	PCD-33A	PC-955	PC-935
	Pin No.	Pin No.	Pin No.	Pin No.	Pin No.	Pin No.	Pin No.	Pin No.	Pin No.
YA(-)	13	11	11	10	11	16	11	11	11
YB(+)	14	14	14	13	14	17	14	12	12
SG	15	17	17	14	17	18	17	16	16

(2) RS-485 connection diagram 2)

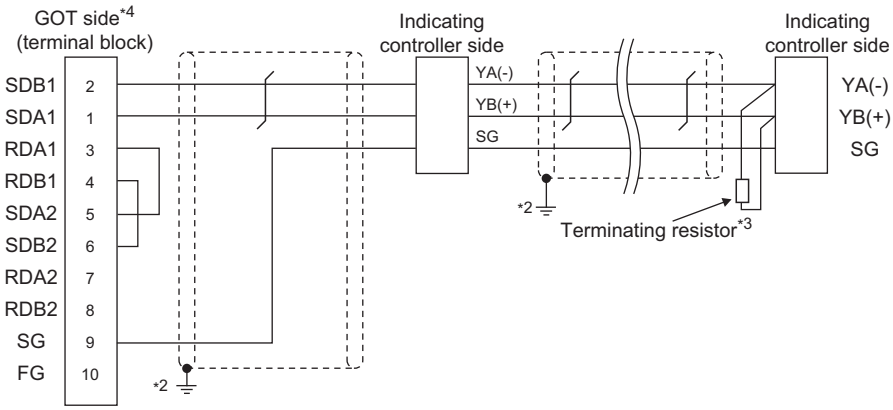

*1 Pin No. of communication converter differs depending on the model.
Refer to the following table.
*2 Connect FG grounding to the appropriate part of a cable shield line.
*3 For details of the terminating resistor specifications, refer to the following manual.

➠ User's Manual of the Shinko Technos indicating controller

*4 Set the terminating resistor of GOT side which will be a terminal.

➠ ■3. Connecting terminating resistors

Signal name	Model of indicating controller								
	JCS-33A	JCR-33A	JCD-33A	JCM-33A	JIR-301-M	ACS-13A	PCD-33A	PC-955	PC-935
	Pin No.	Pin No.	Pin No.	Pin No.	Pin No.	Pin No.	Pin No.	Pin No.	Pin No.
YA(-)	13	11	11	10	11	16	11	11	11
YB(+)	14	14	14	13	14	17	14	12	12
SG	15	17	17	14	17	18	17	16	16

(3) RS-485 connection diagram 3)

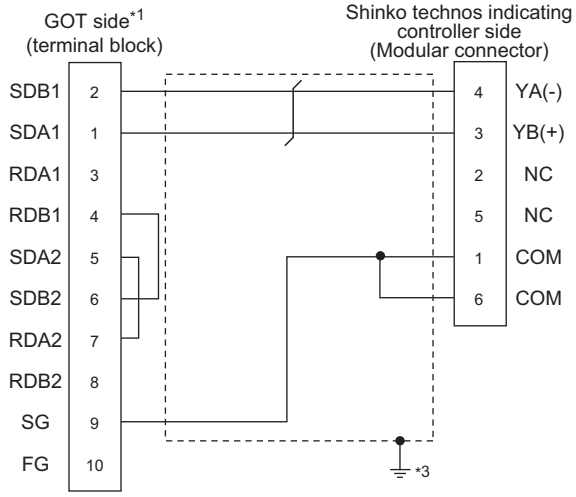

*1 Set the terminating resistor of The GOT side.

➠ ■3. Connecting terminating resistors

*2 For details of the pin assignment, refer to the following manual.

➠ User's Manual of the Shinko Technos indicating controller

*3 Connect FG grounding to the appropriate part of a cable shield line.

(4) RS-485 connection diagram 4)

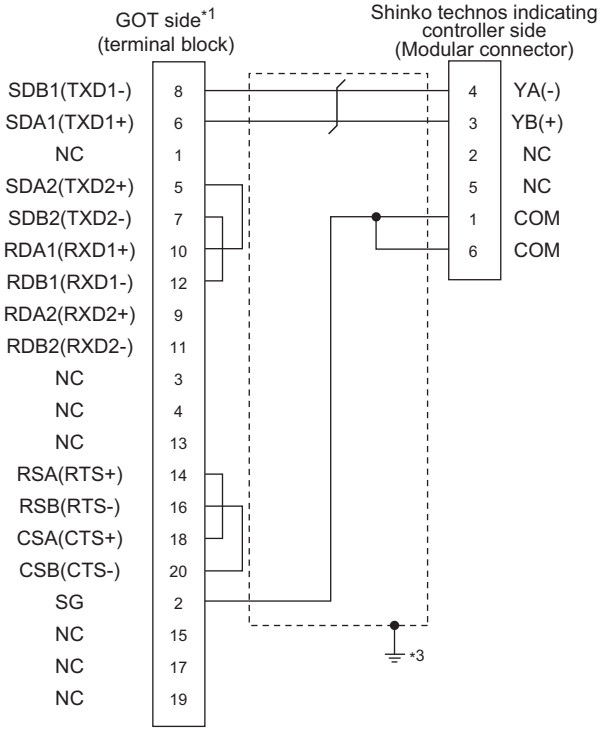

*1 Set the terminating resistor of GOT side.

➠ ■3. Connecting terminating resistors

*2 For details of the pin assignment, refer to the following manual.

➠ User's Manual of the Shinko Technos indicating controller

*3 Connect FG grounding to the appropriate part of a cable shield line.

(5) RS-485 connection diagram 5)

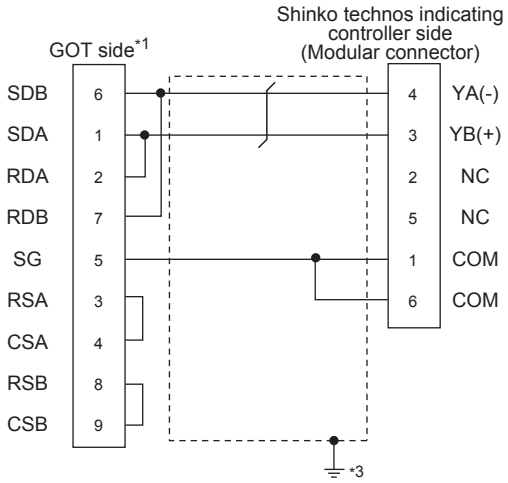

*1 Set the terminating resistor of GOT side.

➠ ■3. Connecting terminating resistors

*2 For details of the pin assignment, refer to the following manual.

➠ User's Manual of the Shinko Technos indicating controller

*3 Connect FG grounding to the appropriate part of a cable shield line.

(6) RS-485 connection diagram 6)

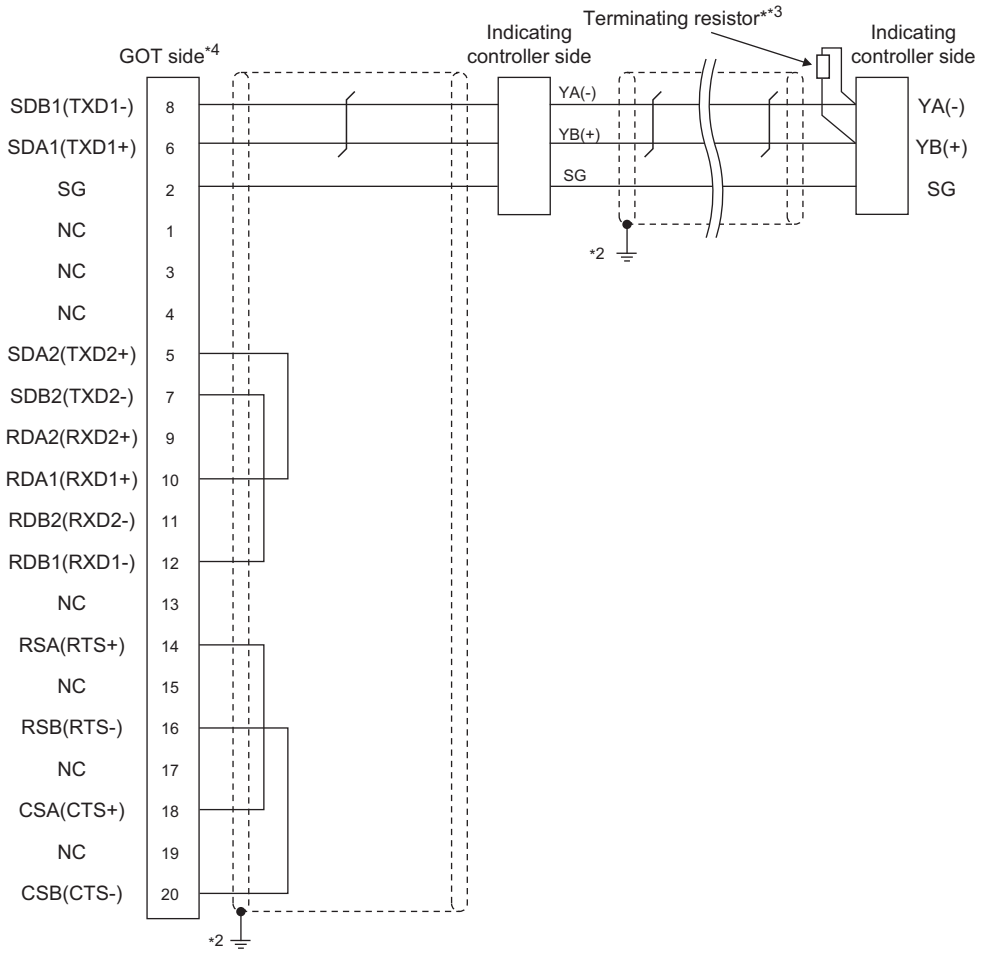

*1 Pin No. of communication converter differs depending on the model. Refer to the following table.

*2 Connect FG grounding to the appropriate part of a cable shield line.

*3 For details of the terminating resistor specifications, refer to the following manual.

➠ User's Manual of the Shinko Technos indicating controller

*4 Set the terminating resistor of GOT side which will be a terminal.

➠ ■3. Connecting terminating resistors

Signal name	Model of indicating controller								
	JCS-33A	JCR-33A	JCD-33A	JCM-33A	JIR-301-M	ACS-13A	PCD-33A	PC-955	PC-935
	Pin No.	Pin No.	Pin No.	Pin No.	Pin No.	Pin No.	Pin No.	Pin No.	Pin No.
YA(-)	13	11	11	10	11	16	11	11	11
YB(+)	14	14	14	13	14	17	14	12	12
SG	15	17	17	14	17	18	17	16	16

(7) RS-485 connection diagram 7)

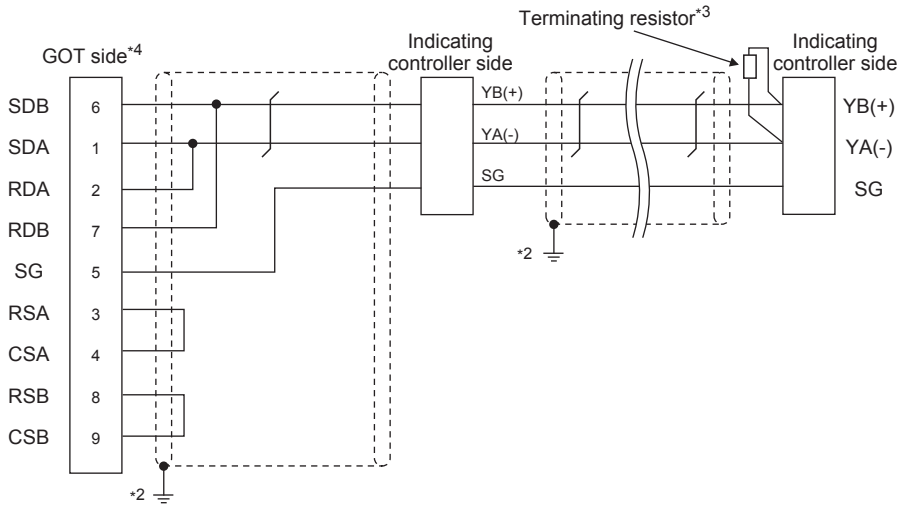

*1 Pin No. of communication converter differs depending on the model. Refer to the following table.

*2 Connect FG grounding to the appropriate part of a cable shield line.

*3 For details of the terminating resistor specifications, refer to the following manual.

➠ User's Manual of the Shinko Technos indicating controller

*4 Set the terminating resistor of GOT side which will be a terminal.

➠ ■3. Connecting terminating resistors

Signal name	Model of indicating controller								
	JCS-33A	JCR-33A	JCD-33A	JCM-33A	JIR-301-M	ACS-13A	PCD-33A	PC-955	PC-935
	Pin No.	Pin No.	Pin No.	Pin No.	Pin No.	Pin No.	Pin No.	Pin No.	Pin No.
YA(-)	13	11	11	10	11	16	11	11	11
YB(+)	14	14	14	13	14	17	14	12	12
SG	15	17	17	14	17	18	17	16	16

■2. Precautions when preparing a cable

(1) Cable length

(a) The length of the RS-485 cable used for direct connecting the indicating controller to the communication converter

The length of the RS-485 cable must be 1200m or less.

(b) The length of the RS-485 cable used for direct connecting the indicating controller to GOT

The length of the RS-485 cable must be 500m or less.

(2) GOT side connector

For the GOT side connector, refer to the following.

➠ 1.4.1 GOT connector specifications

(3) Shinko Technos indicating controller side connector

Use the connector compatible with the Shinko Technos indicating controller side.
For details, refer to the user's manual of the Shinko Technos indicating controller.

■3. Connecting terminating resistors

(1) GOT side

Set the terminating resistor setting switch of the GOT main unit to "100 OHM".
For the procedure to set the terminating resistor, refer to the following.

➠ 1.4.3 Terminating resistors of GOT

(2) Shinko Technos indicating controller side

When connecting a Shinko Technos indicating controller to the GOT, a terminating resistor must be connected to the Shinko Technos indicating controller.

➠ User's Manual of the Shinko Technos indicating controller

10.4.1 Setting communication interface (Communication settings)

Set the channel of the equipment to be connected to the GOT.

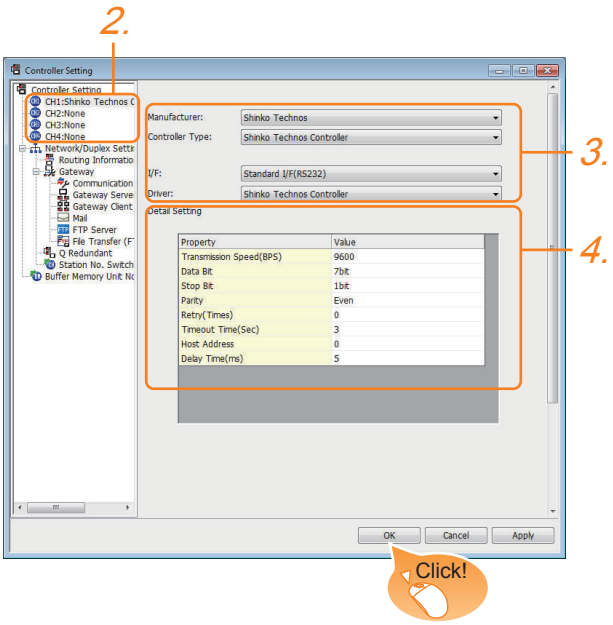

Step 1. Select [Common] → [Controller Setting] from the menu.

Step 2. The Controller Setting window is displayed. Select the channel to be used from the list menu.

Step 3. Set the following items.
- Manufacturer: Shinko Technos
- Controller Type: Shinko Technos Controller
- I/F: Interface to be used
- Driver: Shinko Technos Controller

Step 4. The detailed setting is displayed after Manufacturer, Controller Type, I/F, and Driver are set. Make the settings according to the usage environment.

➠ 10.4.2 Communication detail settings

Click the [OK] button when settings are completed.

POINT

The settings of connecting equipment can be confirmed in [I/F Communication Setting]. For details, refer to the following.

➠ 1.1.2 I/F communication setting

10.4.2 Communication detail settings

Make the settings according to the usage environment.

Property	Value
Transmission Speed(BPS)	9600
Data Bit	7 bit
Stop Bit	1 bit
Parity	Even
Retry(Times)	0
Timeout Time(Sec)	3
Host Address	0
Delay Time(ms)	5

Item	Description	Range
Transmission Speed	Set this item when change the transmission speed used for communication with the connected equipment. (Default: 9600bps)	9600bps, 19200bps, 38400bps, 57600bps, 115200bps
Data Bit	Set this item when change the data length used for communication with the connected equipment. (Default: 7bits)	7bits/8bits
Stop Bit	Specify the stop bit length for communications. (Default: 1bit)	1bit/2bits
Parity	Specify whether or not to perform a parity check, and how it is performed during communication. (Default: Even)	None Even Odd
Retry	Set the number of retries to be performed when a communication error occurs. (Default: 0time)	0 to 5times
Timeout Time	Set the time period for a communication to time out. (Default: 3sec)	3 to 30sec
Host Address	Specify the host address (station No. of the GOT to which the indicating controller is connected) in the connected network. (Default: 0)	0 to 94
Delay Time	Set this item to adjust the transmission timing of the communication request from the GOT. (Default: 5ms)	0 to 300ms

POINT

(1) Communication interface setting by the Utility
The communication interface setting can be changed on the Utility's [Communication Settings] after writing [Communication Settings] of project data.
For details on the Utility, refer to the following manual.

➠ GOT2000 Series User's Manual (Utility)

(2) Precedence in communication settings
When settings are made by GT Designer3 or the Utility, the latest setting is effective.

POINT

(1) Shinko Technos indicating controller
For details of Shinko Technos indicating controller, refer to the following manual.

➠ User's Manual of the Shinko Technos indicating controller

(2) Communication converter
For details on communication settings of the communication converter, refer to the following manual.

➠ User's Manual of communication converter

Model name		Refer to
Indicating controller	ACS-13A, DCL-33A, JC, JCM-33A, JIR-301-M, PCD-300 Series, PC-900 Series (PC-955-□/M,C5, PC-935-□/M,C5)	➠ 10.5.1
	FCD-100, FCR-100, FCR-23A, FIR Series, PC-900 Series (PC-955-□/M,C, PC-935-□/M,C)	➠ 10.5.2
Communication converter	IF-400	➠ 10.5.3

10.5.1 Connecting to ACS-13A, DCL- 33A, JC, JCM-33A, JIR-301- M, PCD-300 Series, PC-900 Series (PC-955-[ ]/M,C5, PC- 935-[ ]/M,C5)

■1. Communication settings

Make the communication settings by operating the key of the indicating controller.

Item	Set value
Transmission speed*1	9600bps, 19200bps
Data bit	7bits (fixed)
Parity bit	Even (fixed)
Stop bit	1bit (fixed)
Station No.*2*3	0 to 95
Communication protocol	Shinko protocol

*1 Adjust the settings with GOT settings.
*2 Avoid duplication of the station No. with any of the other units.
*3 When setting the "95" to the station No., the read-out of data cannot be performed.

10.5.2 Connecting to FCD-100, FCR- 100, FCR-23A, FIR Series, PC-900 Series (PC-955-[ ]/ M,C, PC-935-[ ]/M,C)

■1. Communication settings

Make the communication settings by operating the key of the indicating controller.

Item	Set value
Transmission speed*1	9600bps, 19200bps
Data bit	7bits (fixed)
Parity bit	Even (fixed)
Stop bit	1bit (Fixed)
Station No.*1*2	0 to 95
Communication protocol	Shinko protocol

*1 Adjust the settings with GOT settings.
*2 When setting the "95" to the station No., the read-out of data cannot be performed.

10.5.3 Connecting to communication converter (IF-400)

■1. Communication settings

Make the communication settings by operating the key of the communication converter.

Item	Set value
Transmission speed*1	9600bps, 19200bps
Sending/Receiving switching period*2	1 character, 2 character

*1 Adjust the settings with GOT and the indicating controller settings.
*2 The setting of 1 character is recommended.

10.5.4 Station No. settings

Set each station number so that no station number overlaps.
The station number can be set without regard to the cable connection order. There is no problem even if station numbers are not consecutive.

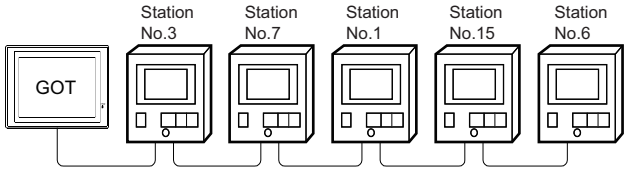

Examples of station number setting

■1. Direct specification

When setting the device, specify the station number of the indicating controller of which data is to be changed.

Specification range
0 to 94

■2. Indirect specification

When setting the device, indirectly specify the station number of the indicating controller of which data is to be changed using the 16-bit GOT internal data register (GD10 to GD25).
When specifying the station No. from 100 to 115 on GT Designer3, the value of GD10 to GD25 compatible to the station No. specification will be the station No. of the indicating controller.

Specification station NO.	Compatible device	Setting range
100	GD10	0 to 94 For the setting other than the above, error (dedicated device is out of range) will occur.
101	GD11	
102	GD12	
103	GD13	
104	GD14	
105	GD15	
106	GD16	
107	GD17	
108	GD18	
109	GD19	
110	GD20	
111	GD21	
112	GD22	
113	GD23	
114	GD24	
115	GD25	

■3. All station specification

Target station differs depending on write-in operation or read-out operation.

- For write-in operation, all station will be a target.
  In the WORD BIT write-in operation, only the indicating controller whose station No. is the same as host address is applicable. For details of host address setting, refer to the following.

  ➠ 10.4.1 Setting communication interface (Communication settings)
- In the read-out operation, only the indicating controller whose station No. is the same as host address is applicable. For details of host address setting, refer to the following.

  ➠ 10.4.1 Setting communication interface (Communication settings)

10.6 Device Range that Can Be Set

The device ranges of controller that can be used for GOT are as follows.
Note that the device ranges in the following tables are the maximum values that can be set in GT Designer3.
The device specifications of controllers may differ depending on the models, even though belonging to the same series.
Please make the setting according to the specifications of the controller actually used.
When a non-existent device or a device number outside the range is set, other objects with correct device settings may not be monitored.

■1. Setting item

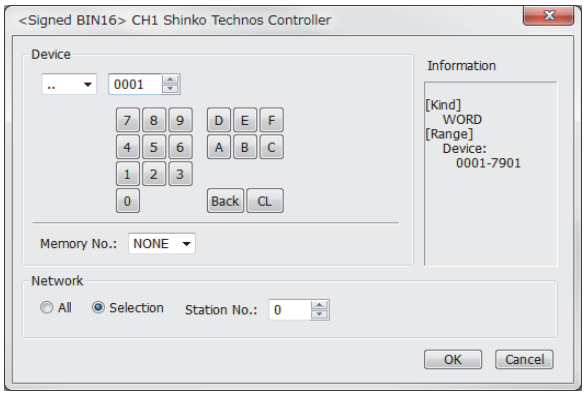

Item	Description	
Device	Set the device name, device number, and bit number. The bit number can be set only when specifying the bit of word device.	
	Memory No.*1	Set the memory number (None, 0 to 7) of the device to be monitored.
Information	Displays the device type and setting range which are selected in [Device].	
Network	Set the monitor target of the set device.	
	All	Select this item when writing data to all the indicating controllers connected. During monitoring, the indicating controller which is set for [Host Address] of the communication detail setting is monitored. (When writing the data in numerical input, the data is written to all connected indicating controllers during input, and the indicating controller that is set for [Host Address] is monitored during other than input (displaying).)
	Station No.	Select this item when monitoring the indicating controller of the specified station No. After selecting, set the station No. of the indicating controller in the following range. 0 to 94:To monitor the indicating controller of the specified station No. 95:Same as the setting of [All]. 100 to 115:To specify the station No. of the indicating controller to be monitored by the value of GOT data register (GD).*2

*1 The device name is displayed as follows when the memory number (0 to 7) is set.

Memory No.	Displayed device name
None	Device Number
0	M0/Device Number
1	M1/Device Number
2	M2/Device Number
3	M3/Device Number
4	M4/Device Number
5	M5/Device Number
6	M6/Device Number
7	M7/Device Number

*2 The following shows the relation between station numbers of the indicating controller and the GOT data register.

Station No.	GOT data register (GD)	Setting range
100	GD10	0 to 94 (If setting a value outside the range above, a device range error occurs.)
101	GD11	
:	:	
114	GD24	
115	GD25	

10.6.1 SHINKO indicating controller (Shinko Technos Controller)

Device name		Setting range	Device No. representation
Bit device	The bit specification of the word device*1	Setting range of each word device	-
Word device	Data item (..)	..0001 to ..7901	Hexadecimal

*1 As bit specification of a word device is performed after the GOT reads the value, do not change the value with the indicating controller during this period.

10.7 Precautions

■1. Station number settings of indicating controller

In the system configuration, the indicating controller with the station number set with the host address must be included.
For details of host address setting, refer to the following.

➠ 10.4.1 Setting communication interface (Communication settings)

■2. GOT clock control

Since the indicating controller does not have a clock function, the settings of [time adjusting] or [time broad cast] by GOT clock control will be disabled.

■3. When using the communication converter IF-400

When using the communication converter IF-400, some communication error may occur.Set the number of retries to more than one time.

■4. Disconnecting some of multiple connected equipment

The GOT can disconnect some of multiple connected equipment by setting GOT internal device.For example, the faulty station where a communication timeout error occurs can be disconnected from connected equipment.
For details of GOT internal device setting, refer to the following manual.

➠ GT Designer3 (GOT2000) Screen Design Manual

11. CONNECTION TO CHINO CONTROLLER

11.1 Connectable Model List . . . . . 11 - 2
11.2 System Configuration . . . . . 11 - 3
11.3 Connection Diagram. . . . . 11 - 11
11.4 GOT Side Settings . . . . . 11 - 24
11.5 Controller Side Setting. . . . . 11 - 26
11.6 Device Range that Can Be Set. . . . . 11 - 37
11.7 Precautions . . . . . 11 - 39

11. CONNECTION TO CHINO CONTROLLER

11.1 Connectable Model List

The following table shows the connectable models.

Series	Model name*1	Clock	Communication Type	Connectable GOT	Refer to
LT230 Series	LT230	×	RS-232 RS-485	GT27 GT25 GT23	➠ 11.2.1
LT300 Series	LT350	×	RS-232 RS-422 RS-485		
	LT370				
LT400 Series	LT450	×			
	LT470				
LT830 Series	LT830	×	RS-232 RS-485		
DZ1000 Series	DZ1000	×	RS-232 RS-422 RS-485		
DZ2000 Series	DZ2000	×			
DB1000 Series	DB1000	×			
DB2000 Series	DB2000	×			
KP Series	KP1000 KP2000	×	RS-232 RS-422 RS-485	GT27 GT25 GT23	➠ 11.2.2
AL3000 Series	AL3000	×			
AH3000 Series	AH3000	×			
SE3000 Series	SE3000	×	RS-232 RS-422 RS-485	GT27 GT25 GT23	➠ 11.2.3
JU Series	JU	×	RS-422 RS-485		
KE Series	KE3000	×			
LE5000 Series	LE5000	×			
GT120 Series	GT120	×	RS-232 RS-485	GT27 GT25 GT23	➠ 11.2.4

*1 From the models of controller, select the detailed model name which supports each communication type. For details of CHINO controller detailed model names, refer to the following catalog.

➠ Catalog of CHINO controllers

11.2 System Configuration

11.2.1 Connecting to LT230, LT300, LT400, LT830, DZ1000, DZ2000, DB1000, DB2000 series

■1. When connecting to controller

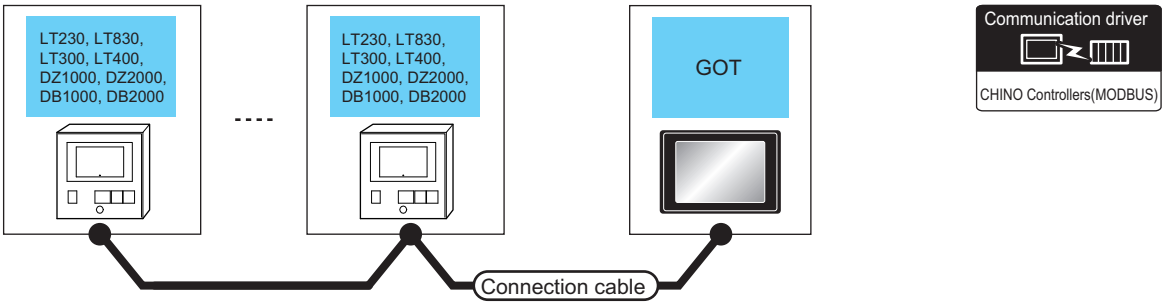

Indicating controller		Connection cable		GOT		Number of connectable equipment
Model name	Communication Type	Cable model Connection diagram number	Max. distance	Option device	Model	
LT300 LT400 DZ1000 DZ2000 DB1000 DB2000	RS-232	User preparing RS232 connection diagram 1)	15m	- (Built into GOT)	GT27 GT25 GT23	1 controller for 1 GOT
				GT15-RS2-9P	GT27 GT25	
	RS-422	User preparing RS422 connection diagram 2)	1200m	- (Built into GOT)	GT27 GT25 GT23	31 controllers for 1 GOT*2
				GT15-RS4-9S	GT27 GT25	
LT230 LT300 LT400 LT830 DZ1000 DZ2000 DB1000 DB2000	RS-485	User preparing RS485 connection diagram 1)	1200m	FA-LTBGTR4CBL05 (0.5m) FA-LTBGTR4CBL10 (1m) FA-LTBGTR4CBL20 (2m)	GT27 GT25 GT23	31 controllers for 1 GOT*2
		User preparing RS485 connection diagram 3)	1200m	GT15-RS4-TE	GT27 GT25	
		User preparing RS485 connection diagram 12)	1200m	- (Built into GOT)	GT27 GT25	

■2. When connecting to converter

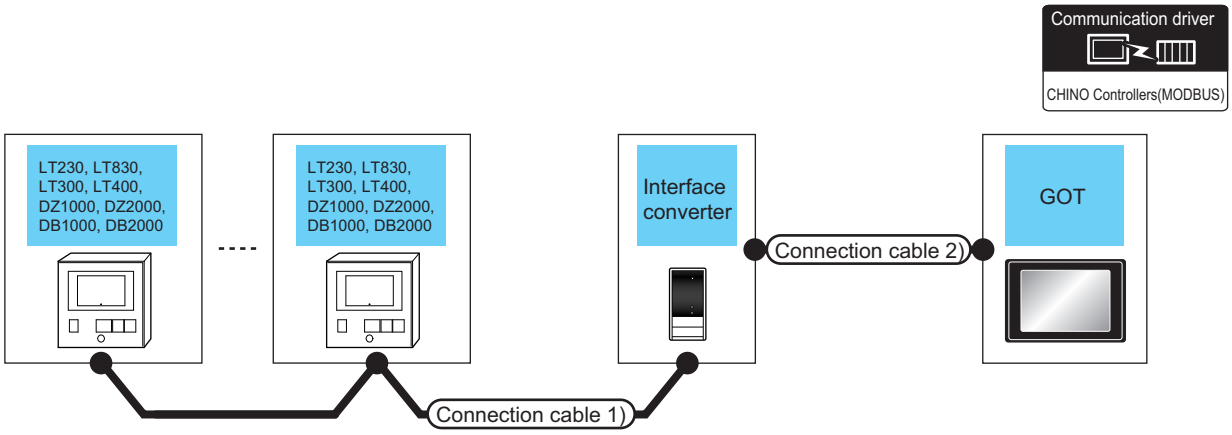

Indicating controller	Connection cable 1)		Converter*1		Connection cable 2)		GOT		Number of connectable equipment
Model name	Cable model Connection diagram number	Max. distance	Model name	Communication Type	Cable model Connection diagram number	Max. distance	Option device	Model	
LT300 LT400 DZ1000 DZ2000 DB1000 DB2000	User preparing RS422 connection diagram 1)	1200m	SC8-10	RS-232	User preparing RS232 connection diagram 1)	15m	- (Built into GOT)	GT27 GT25 GT23	31 controllers for 1 GOT
							GT15-RS2-9P	GT27 GT25	
LT230 LT300 LT400 LT830 DZ1000 DZ2000 DB1000 DB2000	User preparing RS485 connection diagram 2)	1200m	SC8-10	RS-232	User preparing RS232 connection diagram 1)	15m	- (Built into GOT)	GT27 GT25 GT23	
							GT15-RS2-9P	GT27 GT25	

*1 The converter is a product manufactured by CHINO corporation. For details of the product, contact CHINO corporation.

11.2.2 Connecting to KP1000, KP2000, AL3000, AH3000 series

■1. When connecting to controller

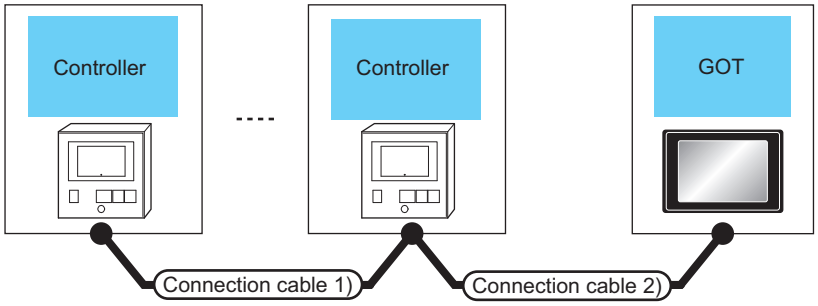

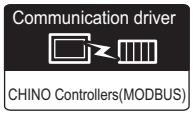

Indicating controller		Connection cable 1)	Connection cable 2)	Max. distance	GOT		Number of connectable equipment
Model name	Communication Type	Cable model*1 Connection diagram number	Cable model*1 Connection diagram number		Option device	Model	
KP1000 KP2000 AL3000 AH3000	RS-232	-	RZ-CRS6□□ or User preparing RS232 connection diagram 1)	15m	- (Built into GOT)	GT27 GT25 GT23	1 controller for 1 GOT
					GT15-RS2-9P	GT27 GT25	
	RS-422	RZ-CRA1□□	User preparing RS422 connection diagram 2)	1200m	- (Built into GOT)	GT27 GT25 GT23	31 controllers for 1 GOT*3
					GT15-RS4-9S	GT27 GT25	
		User preparing RS422 connection diagram 2)		1200m	- (Built into GOT)	GT27 GT25 GT23	
					GT15-RS4-9S	GT27 GT25	
	RS-485	RZ-CRA1□□	User preparing RS422 connection diagram 1)	1200m	FA-LTBGTR2CBL05 (0.5m) FA-LTBGTR2CBL10 (1m) FA-LTBGTR2CBL20 (2m)	GT27 GT25 GT23	31 controllers for 1 GOT
		User preparing RS485 connection diagram 1)					
		RZ-LEC□□□	User preparing RS485 connection diagram 3)	1200m	GT15-RS4-TE	GT27 GT25	
		User preparing RS485 connection diagram 12)		1200m	- (Built into GOT)	GT27 GT25	

*1 Product manufactured by CHINO corporation. For details of the product, contact CHINO corporation.

■2. When connecting to converter

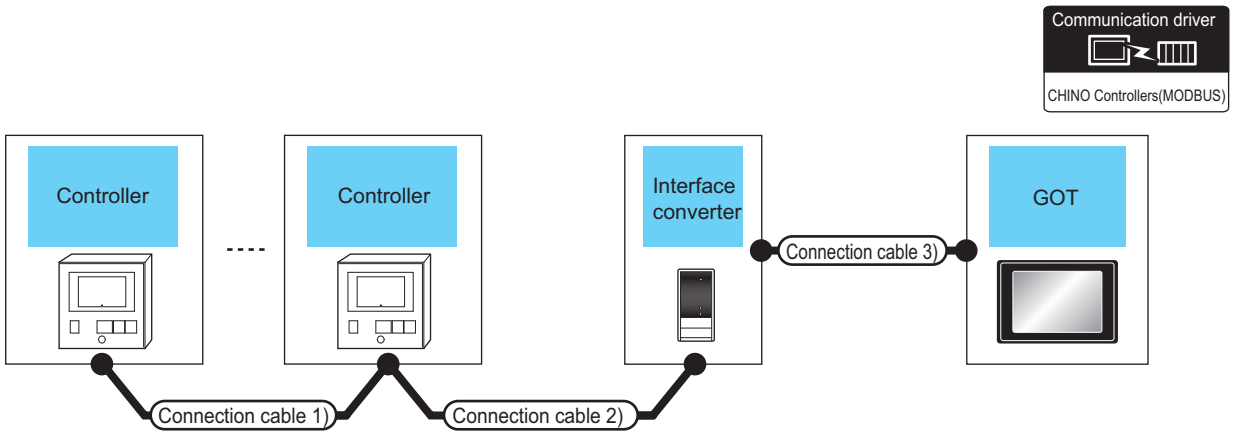

Indicating controller	Connection cable 1)	Connection cable 2)	Max. distance	Converter*1		Connection cable 3)		GOT		Number of connectable equipment
Model name	Cable model*1 Connection diagram number	Cable model*1 Connection diagram number		Model name	Communication Type	Cable model Connection diagram number	Max. distance	Option device	Model	
KP1000 KP2000 AL3000 AH3000	RZ-CRA1□□ or User preparing RS422 connection diagram 1)	RZ-CRA2□□ or User preparing RS422 connection diagram 1)	1200m	SC8 -10	RS-232	RZ-CRS6□ or User preparing RS232 connection diagram 1)	15m	- (Built into GOT)	GT27 GT25 GT23	31 controllers for 1 GOT
								GT15-RS2-9P	GT27 GT25	
	RZ-LEC□□□ or User preparing RS485 connection diagram 2)	RZ-LEC□□□ (only KP1000, KP2000) RZ-LED□□□ (only AL3000, AH3000) or User preparing RS485 connection diagram 2)	1200m	SC8 -10	RS-232	RZ-CRS6□ or User preparing RS232 connection diagram 1)	15m	- (Built into GOT)	GT27 GT25 GT23	
								GT15-RS2-9P	GT27 GT25	

*1 Product manufactured by CHINO corporation. For details of the product, contact CHINO corporation.

11.2.3 Connecting to SE3000, JU, KE3000, LE5000 series

■1. When connecting to controller

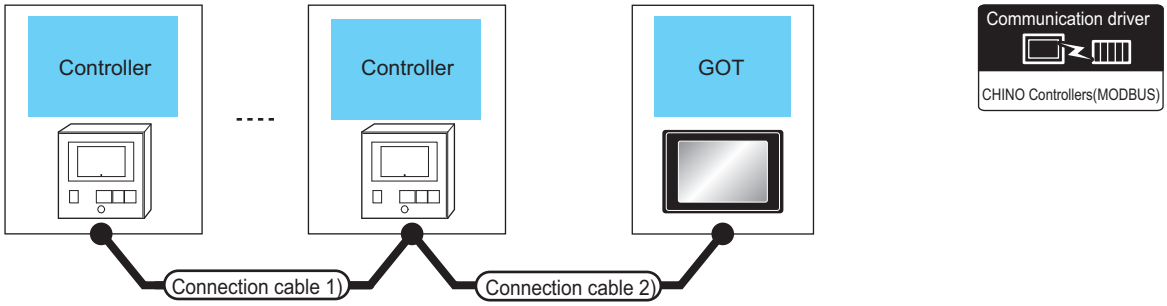

Indicating controller		Connection cable 1)	Connection cable 2)	Max. distance	GOT		Number of connectable equipment
Model name	Communication Type	Cable model*1 Connection diagram number	Cable model*1 Connection diagram number		Option device	Model	
SE3000	RS-232	--	RZ-CRS6□□ or User preparing RS232 connection diagram 1)	15m	- (Built into GOT)	GT27 GT25 GT23	1 controller for 1 GOT
					GT15-RS2-9P	GT27 GT25	
SE3000 JU KE3000 LE5000	RS-422	RZ-CRA1□□*2	User preparing RS422 connection diagram 2)	1200m	- (Built into GOT)	GT27 GT25 GT23	31 controllers for 1 GOT*3
					GT15-RS4-9S	GT27 GT25	
		User preparing RS422 connection diagram 2)		1200m	- (Built into GOT)	GT27 GT25 GT23	
					GT15-RS4-9S	GT27 GT25	
	RS-485	RZ-LEC□□□*2 or RZ-CSS1Z2*3	User preparing RS485 connection diagram 9)	1200m	FA-LTBGTR2CBL05 (0.5m) FA-LTBGTR2CBL10 (1m) FA-LTBGTR2CBL20 (2m)	GT27 GT25 GT23	31 controllers for 1 GOT
		User preparing RS485 connection diagram 9)					
		RZ-LEC□□□*2 or RZ-CSS1Z2*3	User preparing RS485 connection diagram 10)	1200m	GT15-RS4-TE	GT27 GT25	
		User preparing RS485 connection diagram 13)		1200m	- (Built into GOT)	GT27 GT25	

*1 Product manufactured by CHINO corporation. For details of the product, contact CHINO corporation.
*2 RZ-CRA1□□ and RZ-LEC□□□ can be used in SE3000, JU or LE5000 series only.
*3 RZ-CSS1Z2 can be used in JU series only.

■2. When connecting to converter

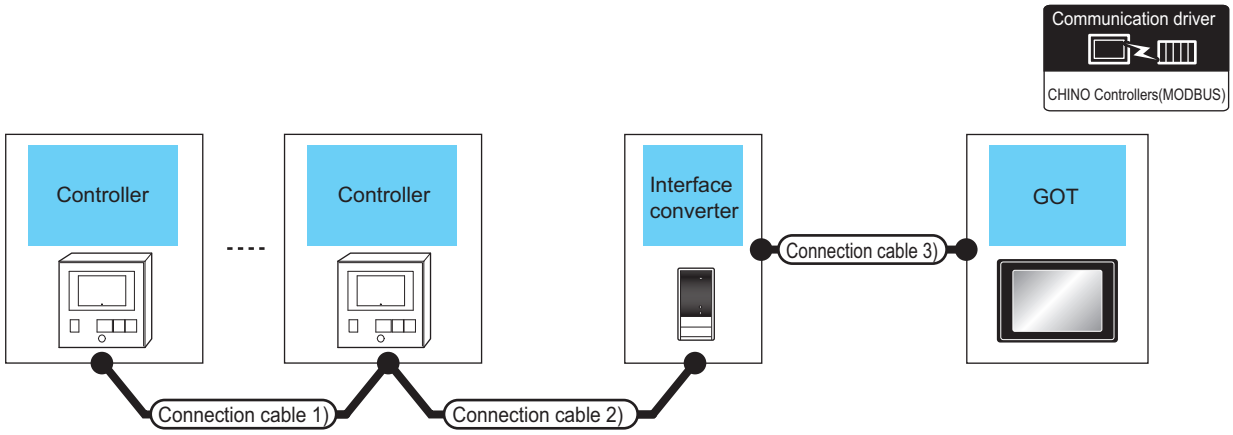

Indicating controller	Connection cable 1)	Connection cable 2)	Max. distance	Converter*1		Connection cable 3)		GOT		Number of connectable equipment
Model name	Cable model*1 Connection diagram number	Cable model*1 Connection diagram number		Model name	Communication Type	Cable model Connection diagram number	Max. distance	Option device	Model	
SE3000 JU KE3000 LE5000	RZ-CRA1□□*2 or User preparing RS422 connection diagram 1)	RZ-CRA2□□*2 or User preparing RS422 connection diagram 1)	1200m	SC8 -10	RS-232	RZ-CRS6□ or User preparing RS232 connection diagram 1)	15m	- (Built into GOT)	GT27 GT25 GT23	31 controllers for 1 GOT
								GT15-RS2-9P	GT27 GT25	
	RZ-LEC□□□ (only SE3000, JU, LE5000) or RZ-CSS1Z2*3 or User preparing RS485 connection diagram 11)	RZ-LEC□□□ (only JU, LE5000) RZ-LED□□□ (only SE3000) or User preparing RS485 connection diagram 11)	1200m	SC8 -10	RS-232	RZ-CRS6□ or User preparing RS232 connection diagram 1)	15m	- (Built into GOT)	GT27 GT25 GT23	
								GT15-RS2-9P	GT27 GT25	

*1 Product manufactured by CHINO corporation. For details of the product, contact CHINO corporation.

*2 RZ-CRA1□□ and RZ-CRA2□□ can be used in SE3000, JU or LE5000 series only.

*3 RZ-CSS1Z2 can be used in JU series only.

11.2.4 Connecting to GT120 Series

■1. When connecting to controller

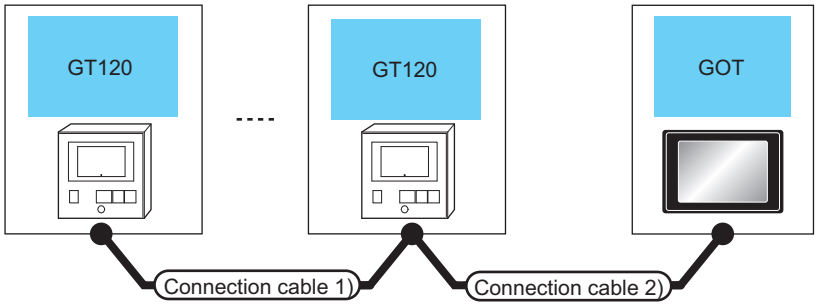

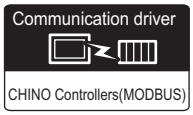

Indicating controller		Connection cable 1)	Connection cable 2)	Max. distance	GOT		Number of connectable equipment
Model name	Communication Type	Cable model Connection diagram number	Cable model Connection diagram number		Option device	Model	
GT120	RS-485	GT8-CDD(60mm) or User preparing RS485 connection diagram 4)	User preparing RS485 connection diagram 5)	1200m	- (Built into GT)	GT27 GT25 GT23	31 controllers for 1 GOT
			User preparing RS485 connection diagram 6)	1200m	FA-LTBGT2R4CBL05 (0.5m) FA-LTBGT2R4CBL10 (1m) FA-LTBGT2R4CBL20 (2m)	GT27 GT25 GT23	
			User preparing RS485 connection diagram 7)	1200m	GT15-RS4-TE	GT27 GT25	

■2. When connecting to converter

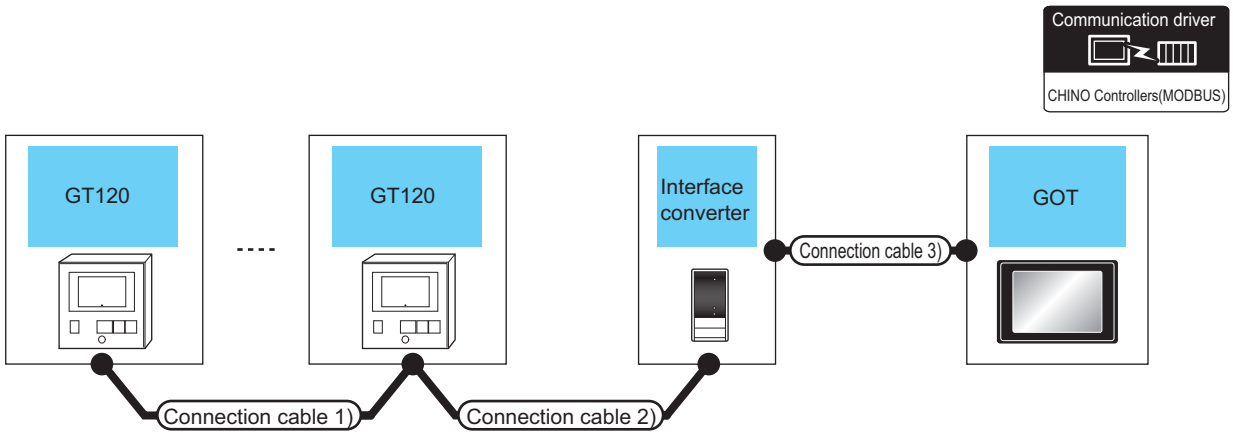

Indicating controller	Connection cable 1)	Connection cable 2)	Max. distance	Converter*1		Connection cable 3)		GOT		Number of connectable equipment
Model name	Cable model Connection diagram number	Cable model Connection diagram number		Model name	Communication Type	Cable model Connection diagram number	Max. distance	Option device	Model	
GT120	GT8-CDD(60mm) or User preparing RS485 connection diagram 4)	GT8-CDM(3m) or User preparing RS485 connection diagram 8)	1200m	SC8-10	RS-232	User preparing RS232 connection diagram 1)	15m	- (Built into GT)	GT27 GT25 GT23	31 controllers for 1 GOT
								GT15-RS2-9P	GT27 GT25	

*1 The converter is a product manufactured by CHINO corporation. For details of the product, contact CHINO corporation.

11.3 Connection Diagram

The following diagram shows the connection between the GOT and the PLC.

11.3.1 RS-232 cable

■1. Connection diagram

(1) RS232 connection diagram 1)

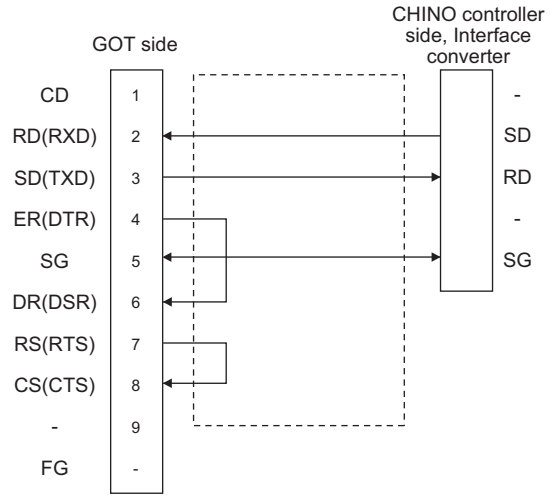

*1 Terminal number of the controller and the converter differ depending on the model.Refer to the following table.

Signal name	Controller					Converter
	LT300	LT400	DZ1000, DZ2000	DB1000	DB2000	SC8-10
	Terminal No.	Terminal No.	Terminal No.	Terminal No.	Terminal No.	Terminal No.
SD	11	11	19	13	27	2
RD	13	13	21	12	26	1
SG	15	15	23	14	28	3

Signal name	Controller				
	KP1000	KP2000		SE3000	AL3000 AH3000
	Terminal No.	Terminal No.*2		Terminal name	Terminal name
		R*3, B*3, C*3, D*3	B*3, E*3		
SD	13	27	30	SD	SD
RD	12	26	29	RD	RD
SG	14	28	31	SG	SG

*2 For KP2000 series, the terminal No. differs according to the model.

*3 This indicates the symbols of the position 10) (third zone) of the following models.
Model: KP2 4) 5) 6) 7) 8) 9) 10) – 12) 13) 14)
For the symbol B, two terminal numbers are available. Select as necessary.

■2. Precautions when preparing a cable

(1) Cable length

The length of the RS-232 cable must be 15m or less.

(2) GOT side connector

For the GOT side connector, refer to the following.

➠ 1.4.1 GOT connector specifications

(3) CHINO controller side connector

Use the connector compatible with the CHINO controller side module.
For details, refer to the user's manual of the CHINO controller.

11.3.2 RS-422 cable

■1. Connection diagram

(1) RS422 connection diagram 1)

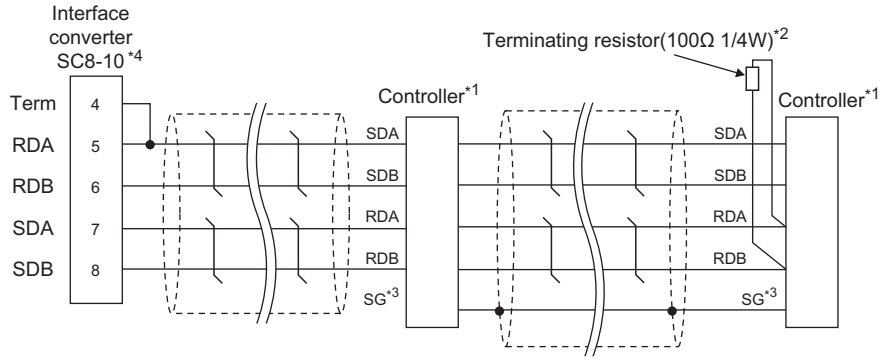

*1 Pin No. of controller differs depending on the model. Refer to the following table.
*2 Terminating resistor should be provided for a controller which will be a terminal.
*3 Do not connect SG of the controller and SG of the converter.
*4 Set the Communication Type switch of the converter to RS-422.

Signal name	Controller type				
	LT300	LT400	DZ1000, DZ2000	DB1000	DB2000
	Terminal No.	Terminal No.	Terminal No.	Terminal No.	Terminal No.
SDA	11	11	19	14	28
SDB	12	12	20	15	29
RDA	13	13	21	12	26
RDB	14	14	22	13	27
SG	15	15	23	16	30

Signal name	Controller type							
	KP1000	KP2000		SE3000	AL3000 AH3000	JU	KE3000	LE5000
	Terminal No.	Terminal No.*5		Terminal name	Terminal name	Terminal No.	Terminal name	Terminal name
		A*6	C*6, F*6					
SDA	14	28	31	SDA	SDA	1	SDA	SDA
SDB	15	29	32	SDB	SDB	2	SDB	SDB
RDA	12	26	29	RDA	RDA	3	RDA	RDA
RDB	13	27	30	RDB	RDB	4	RDB	RDB
SG	16	30	28	SG	SG	5	SG	SG

*5 For KP2000 series, the terminal No. differs according to the model.
*6 This indicates the symbols of the position 10) (third zone) of the following models.
Model: KP2 4) 5) 6) 7) 8) 9) 10) – 12) 13) 14)

(2) RS422 connection diagram 2)

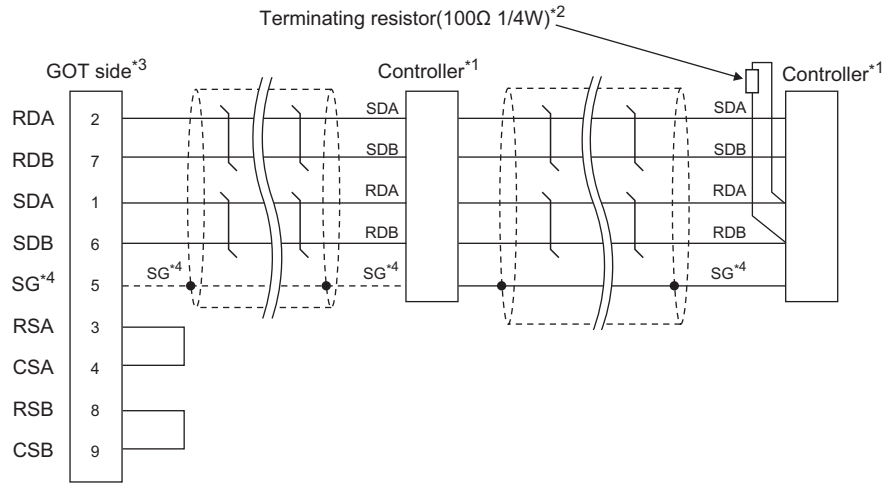

*1 Pin No. of controller differs depending on the model. Refer to the following table.

*2 Terminating resistor should be provided for a controller which will be a terminal.

*3 Set the terminating resistor of GOT side.

➠ ■3. Connecting terminating resistors

*4 When connecting to DB1000 or DB200 Series, connect SG of the controller and SG of the GOT.

Signal name	Controller type				
	LT300	LT400	DZ1000, DZ2000	DB1000	DB2000
	Terminal No.	Terminal No.	Terminal No.	Terminal No.	Terminal No.
SDA	11	11	19	14	28
SDB	12	12	20	15	29
RDA	13	13	21	12	26
RDB	14	14	22	13	27
SG	15	15	23	16	30

Signal name	Controller type							
	KP1000	KP2000		SE3000	AL3000 AH3000	JU	KE3000	LE5000
	Terminal No.	Terminal No.*5		Terminal name	Terminal name	Terminal No.	Terminal name	Terminal name
		A*6	C*6, F*6					
SDA	14	28	31	SDA	SDA	1	SDA	SDA
SDB	15	29	32	SDB	SDB	2	SDB	SDB
RDA	12	26	29	RDA	RDA	3	RDA	RDA
RDB	13	27	30	RDB	RDB	4	RDB	RDB
SG	16	30	28	SG	SG	5	SG	SG

*5 For KP2000 series, the terminal No. differs according to the model.

*6 This indicates the symbols of the position 10) (third zone) of the following models.
Model: KP2 4) 5) 6) 7) 8) 9) 10) – 12) 13) 14)

■2. Precautions when preparing a cable

(1) Cable length

The length of the RS-422 cable must be 1200m or less.

(2) GOT side connector

For the GOT side connector, refer to the following.

➠ 1.4.1 GOT connector specifications

(3) CHINO controller side connector

Use the connector compatible with the CHINO controller side module.
For details, refer to the user's manual of the CHINO controller.

■3. Connecting terminating resistors

(1) GOT side

Set the terminating resistor setting switch of the GOT main unit to "100 OHM".
For the procedure to set the terminating resistor, refer to the following.

➠ 1.4.3 Terminating resistors of GOT

(2) CHINO controller side

When connecting a CHINO controller to the GOT, a terminating resistor must be connected to the CHINO controller.

➠ User's Manual of the CHINO controller

11.3.3 RS-485 cable

■1. Connection diagram

(1) RS485 connection diagram 1)

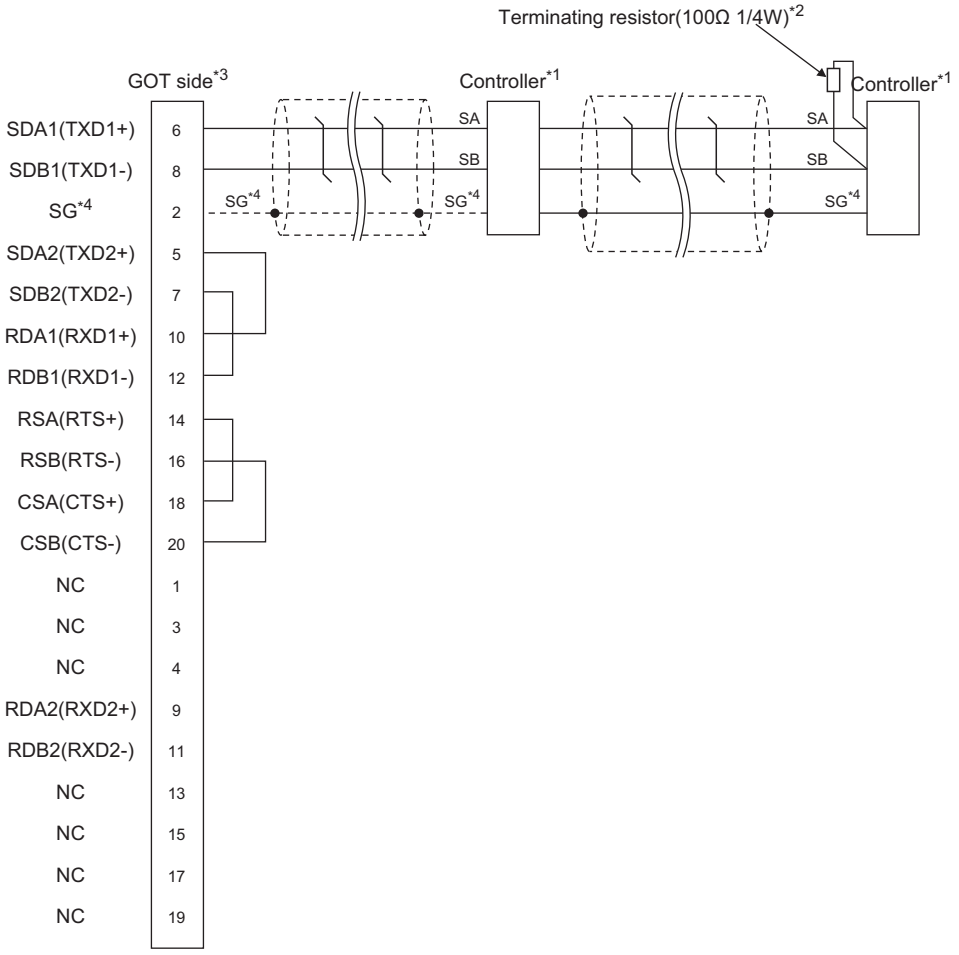

*1 Pin No. of controller differs depending on the model. Refer to the following table.

*2 Terminating resistor should be provided for a controller which will be a terminal.

*3 Set the terminating resistor of GOT side.

➠ ■3. Connecting terminating resistors

*4 When connecting to DB1000 or DB200 Series, connect SG of the controller and SG of the GOT.

Signal name	Controller type						
	LT230	LT300	LT400	LT830	DZ1000, DZ2000	DB1000	DB2000
	Terminal No.	Terminal No.	Terminal No.	Terminal No.	Terminal No.	Terminal No.	Terminal No.
SA	6	11	11	6	19	12	26
SB	7	12	12	7	20	13	27
SG	8	15	15	8	23	14	28

Signal name	Controller type			
	KP1000	KP2000		AL3000 AH3000
	Terminal No.	Terminal No.*5		Terminal name
		S*6, E*6, F*6, G*6	D*6, G*6	
SA	12	26	29	SA
SB	13	27	30	SB
SG	14	28	31	SG

*5 For KP2000 series, the terminal No. differs according to the model.

*6 This indicates the symbols of the position 10) (third zone) of the following models.
Model: KP2 4) 5) 6) 7) 8) 9) 10) – 12) 13) 14)
For the symbol G, two terminal numbers are available. Select as necessary.

(2) RS485 connection diagram 2)

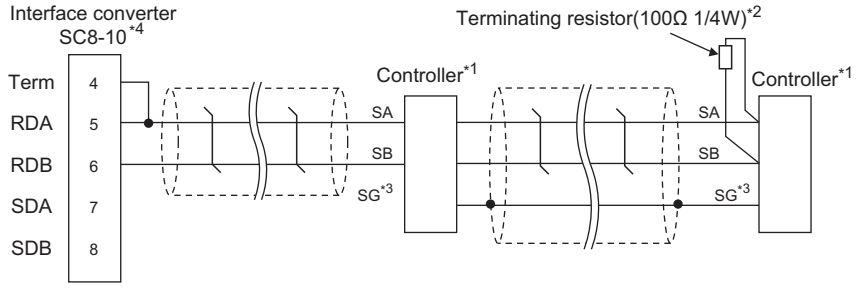

*1 Pin No. of controller differs depending on the model. Refer to the following table.

*2 Terminating resistor should be provided for a controller which will be a terminal.

*3 Do not connect SG of the controller and SG of the GOT.

*4 Set the Communication Type switch of the converter to RS-485.

Signal name	Controller type						
	LT230	LT300	LT400	LT830	DZ1000, DZ2000	DB1000	DB2000
	Terminal No.	Terminal No.	Terminal No.	Terminal No.	Terminal No.	Terminal No.	Terminal No.
SA	6	11	11	6	19	12	26
SB	7	12	12	7	20	13	27
SG	8	15	15	8	23	14	28

Signal name	Controller type			
	KP1000	KP2000		AL3000 AH3000
	Terminal No.	Terminal No.*5		Terminal name
		S*6, E*6, F*6, G*6	D*6, G*6	
SA	12	26	29	SA
SB	13	27	30	SB
SG	14	28	31	SG

*5 For KP2000 series, the terminal No. differs according to the model.

*6 This indicates the symbols of the position 10) (third zone) of the following models.
Model: KP2 4) 5) 6) 7) 8) 9) 10) – 12) 13) 14)
For the symbol G, two terminal numbers are available. Select as necessary.

(3) RS485 connection diagram 3)

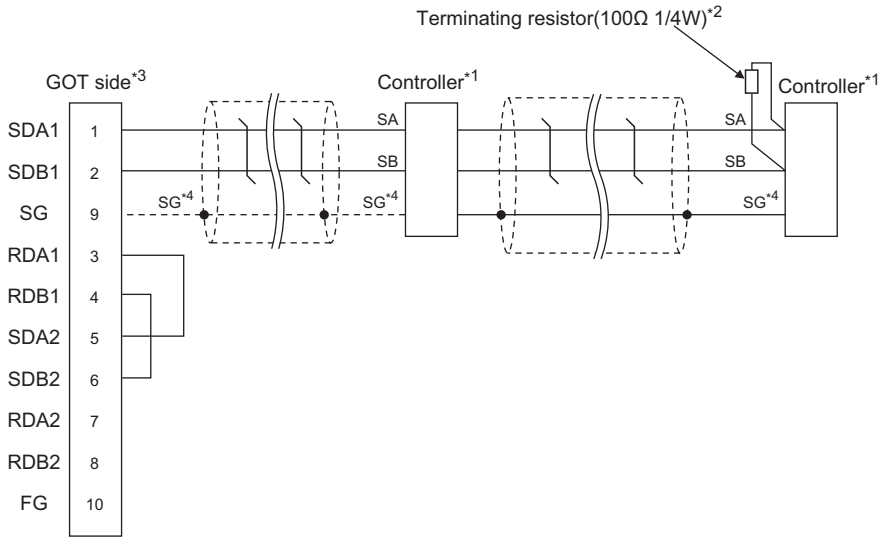

*1 Pin No. of controller differs depending on the model. Refer to the following table.

*2 Terminating resistor should be provided for a controller which will be a terminal.

*3 Set the terminating resistor of GOT side.

➠ ■3. Connecting terminating resistors

*4 When connecting to DB1000 or DB200 Series, connect SG of the controller and SG of the GOT.

Signal name	Controller type						
	LT230	LT300	LT400	LT830	DZ1000, DZ2000	DB1000	DB2000
	Terminal No.	Terminal No.	Terminal No.	Terminal No.	Terminal No.	Terminal No.	Terminal No.
SA	6	11	11	6	19	12	26
SB	7	12	12	7	20	13	27
SG	8	15	15	8	23	14	28

Signal name	Controller type			
	KP1000	KP2000		AL3000 AH3000
	Terminal No.	Terminal No.*5		Terminal name
		S*6, E*6, F*6, G*6	D*6, G*6	
SA	12	26	29	SA
SB	13	27	30	SB
SG	14	28	31	SG

*5 For KP2000 series, the terminal No. differs according to the model.

*6 This indicates the symbols of the position 10) (third zone) of the following models.
Model: KP2 4) 5) 6) 7) 8) 9) 10) – 12) 13) 14)
For the symbol G, two terminal numbers are available. Select as necessary.

(4) RS485 connection diagram 4)

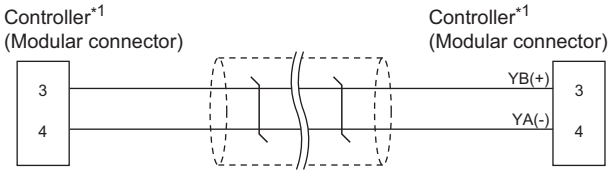

*1 For details of the pin assignment, refer to the following manual.

➠ User's Manual of the CHINO controller

(5) RS485 connection diagram 5)

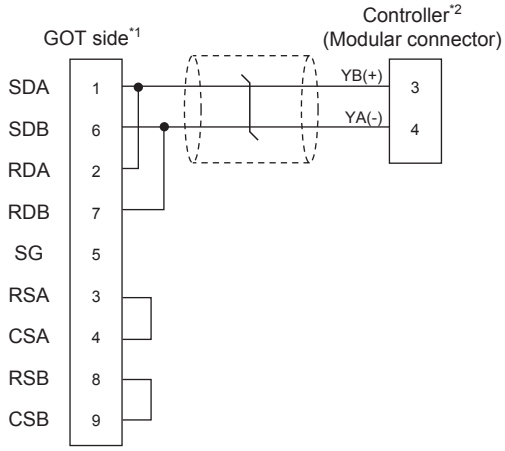

*1 Set the terminating resistor of GOT side.

➠ ■3. Connecting terminating resistors

*2 For details of the pin assignment, refer to the following manual.

➠ User's Manual of the CHINO controller

(6) RS485 connection diagram 6)

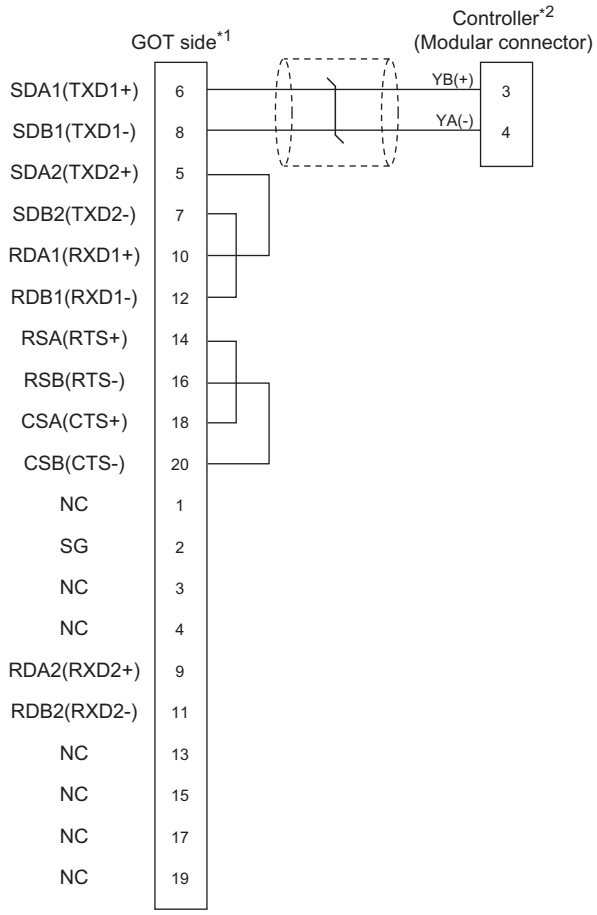

*1 Set the terminating resistor of GOT side.

➠ ■3. Connecting terminating resistors

*2 For details of the pin assignment, refer to the following manual.

➠ User's Manual of the CHINO controller

(7) RS485 connection diagram 7)

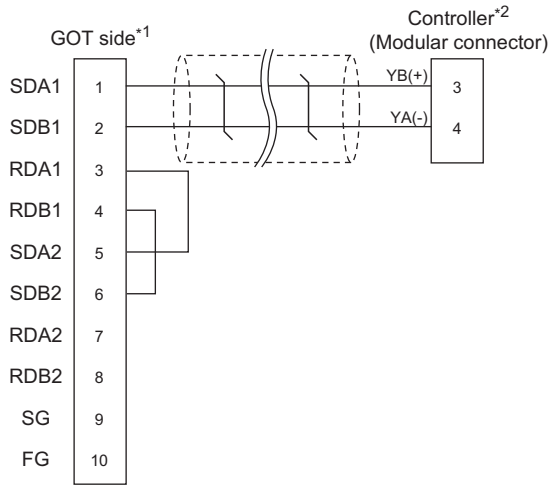

*1 Set the terminating resistor of GOT side.

➠ ■3. Connecting terminating resistors

*2 For details of the pin assignment, refer to the following manual.

➠ User's Manual of the CHINO controller

(8) RS485 connection diagram 8)

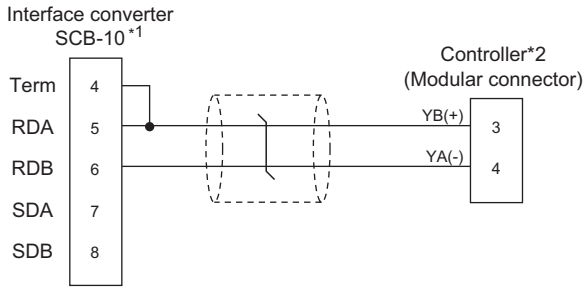

*1 Set the Communication Type switch of the converter to RS-485.

*2 For details of the pin assignment, refer to the following manual.

➠ User's Manual of the CHINO controller

(9) RS485 connection diagram 9)

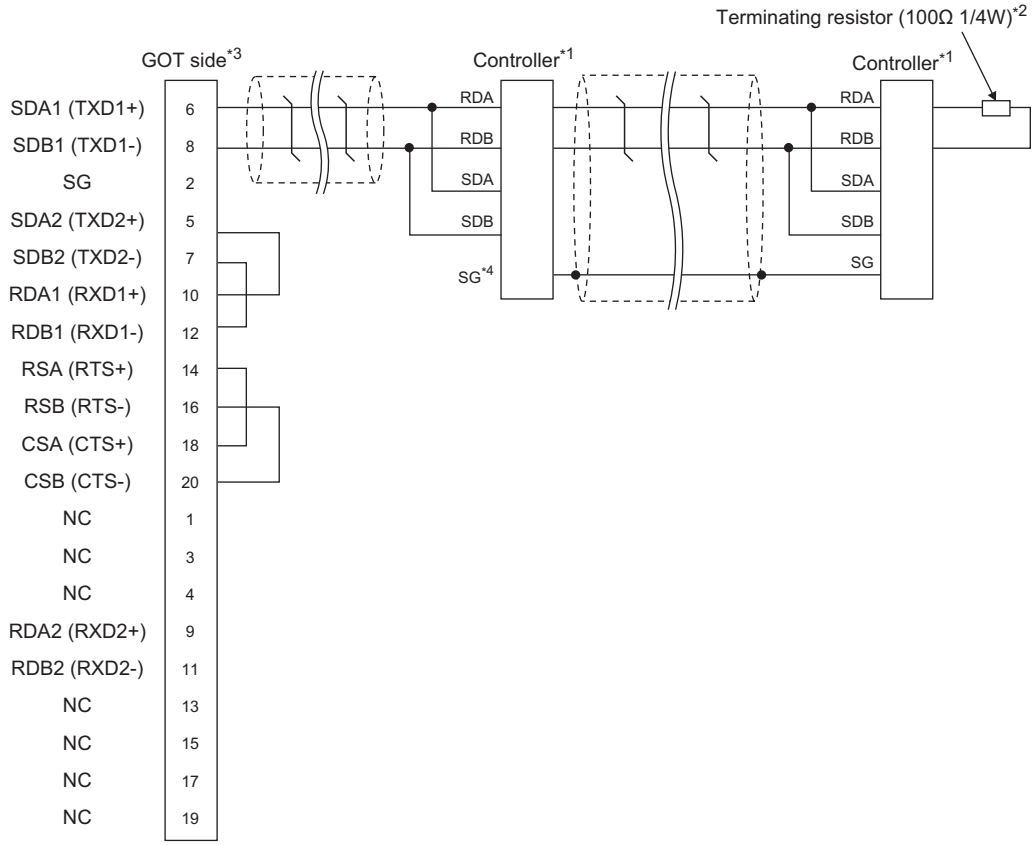

*1 Pin No. of controller differs depending on the model. Refer to the following table.

*2 Terminating resistor should be provided for a controller which will be terminating resistors.

*3 Set the terminating resistor of The GOT side.

➠ ■3. Connecting terminating resistors

*4 Do not connect SG of the controller and SG of the GOT.

Signal name	Controller type			
	SE3000	JU	KE3000	LE5000
	Terminal name	Terminal No.	Terminal name	Terminal name
RDA	RDA	3	RDA	RDA
RDB	RDB	4	RDB	RDB
SDA	SDA	1	SDA	SDA
SDB	SDB	2	SDB	SDB
SG	SG	5	SG	SG

(10) RS485 connection diagram 10)

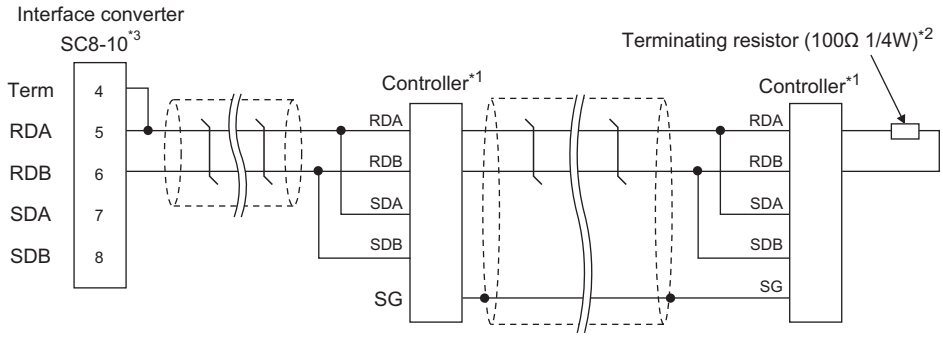

*1 Pin No. of controller differs depending on the model. Refer to the following table.
*2 Terminating resistor should be provided for a controller which will be terminating resistors.
*3 Set the Communication Type switch of the converter to RS-485.

Signal name	Controller type			
	SE3000	JU	KE3000	LE5000
	Terminal name	Terminal No.	Terminal name	Terminal name
RDA	RDA	3	RDA	RDA
RDB	RDB	4	RDB	RDB
SDA	SDA	1	SDA	SDA
SDB	SDB	2	SDB	SDB
SG	SG	5	SG	SG

(11) RS485 connection diagram 11)

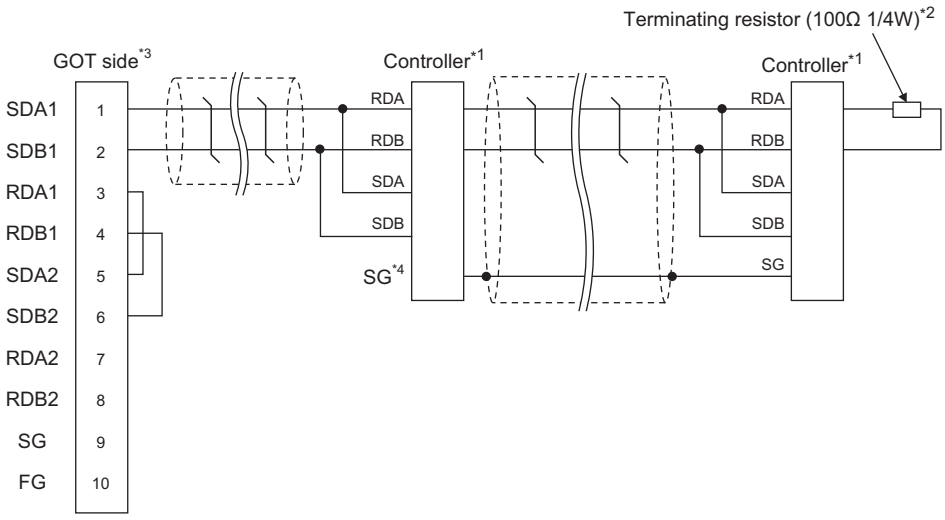

*1 Pin No. of controller differs depending on the model. Refer to the following table.
*2 Terminating resistor should be provided for a controller which will be terminating resistors.
*3 Set the terminating resistor of The GOT side.

➠ ■3. Connecting terminating resistors

*4 Do not connect SG of the controller and SG of the GOT.

Signal name	Controller type			
	SE3000	JU	KE3000	LE5000
	Terminal name	Terminal No.	Terminal name	Terminal name
RDA	RDA	3	RDA	RDA
RDB	RDB	4	RDB	RDB
SDA	SDA	1	SDA	SDA
SDB	SDB	2	SDB	SDB
SG	SG	5	SG	SG

(12) RS485 connection diagram 12)

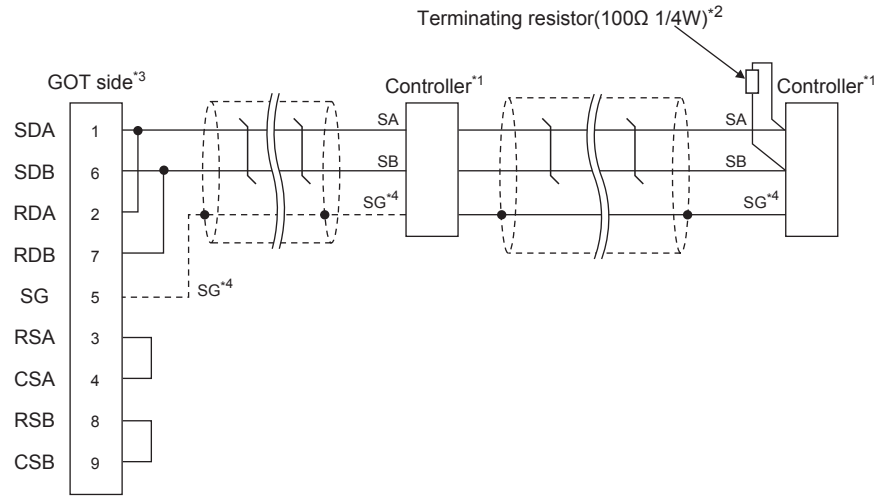

*1 Pin No. of controller differs depending on the model. Refer to the following table.

*2 Terminating resistor should be provided for a controller which will be terminating resistors.

*3 Set the terminating resistor of The GOT side.

➠ ■3. Connecting terminating resistors

*4 When connecting to DB1000 or DB200 Series, connect SG of the controller and SG of the GOT.

Signal name	Controller type						
	LT230	LT300	LT400	LT830	DZ1000, DZ2000	DB1000	DB2000
	Terminal No.	Terminal No.	Terminal No.	Terminal No.	Terminal No.	Terminal No.	Terminal No.
SA	6	11	11	6	19	12	26
SB	7	12	12	7	20	13	27
SG	8	15	15	8	23	14	28

Signal name	Controller type			
	KP1000	KP2000		AL3000 AH3000
	Terminal No.	Terminal No.*5		Terminal name
		S*6, E*6, F*6, G*6	D*6, G*6	
SA	12	26	29	SA
SB	13	27	30	SB
SG	14	28	31	SG

*5 For KP2000 series, the terminal No. differs according to the model.

*6 This indicates the symbols of the position 10) (third zone) of the following models.
Model: KP2 4) 5) 6) 7) 8) 9) 10) - 12) 13) 14)
For the symbol G, two terminal numbers are available. Select as necessary.

(13) RS485 connection diagram 13)

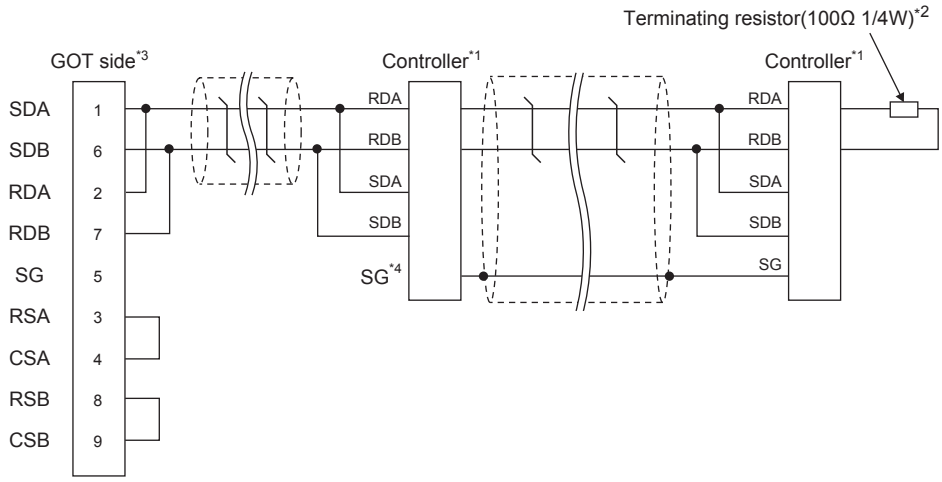

*1 Pin No. of controller differs depending on the model. Refer to the following table.

*2 Terminating resistor should be provided for a controller which will be terminating resistors.

*3 Set the terminating resistor of The GOT side.

➠ ■3. Connecting terminating resistors

*4 Do not connect SG of the controller and SG of the GOT.

Signal name	Controller type			
	SE3000	JU	KE3000	LE5000
	Terminal name	Terminal No.	Terminal name	Terminal name
RDA	RDA	3	RDA	RDA
RDB	RDB	4	RDB	RDB
SDA	SDA	1	SDA	SDA
SDB	SDB	2	SDB	SDB
SG	SG	5	SG	SG

■2. Precautions when preparing a cable

(1) Cable length

The maximum length of the RS-485 cable must be 1,200m or less.

(2) GOT side connector

For the GOT side connector, refer to the following.

➠ 1.4.1 GOT connector specifications

(3) CHINO controller side connector

Use the connector compatible with the CHINO controller side module.
For details, refer to the user's manual of the CHINO controller.

■3. Connecting terminating resistors

(1) GOT side

Set the terminating resistor setting switch of the GOT main unit to "100 OHM".
For the procedure to set the terminating resistor, refer to the following.

➠ 1.4.3 Terminating resistors of GOT

(2) CHINO controller side

When connecting a CHINO controller to the GOT, a terminating resistor must be connected to the CHINO controller.

➠ User's Manual of the CHINO controller

11.4 GOT Side Settings

11.4.1 Setting communication interface (Communication settings)

Set the channel of the equipment to be connected to the GOT.

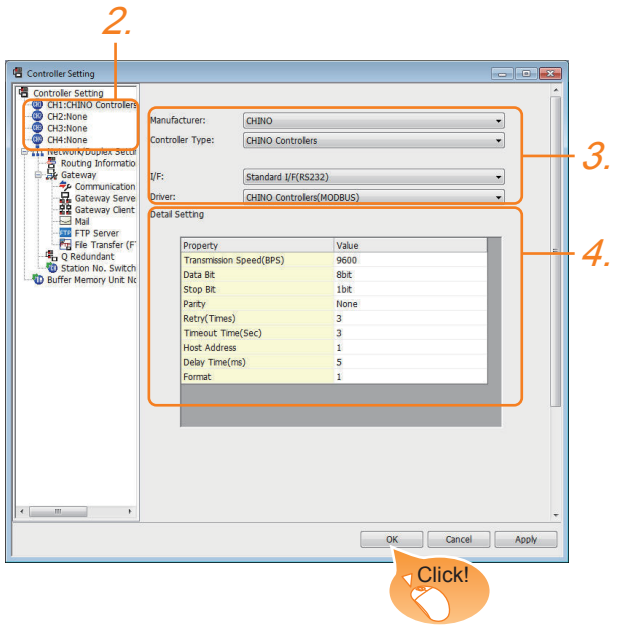

Step 1. Select [Common] → [Controller Setting] from the menu.

Step 2. The Controller Setting window is displayed. Select the channel to be used from the list menu.

Step 3. Set the following items.
- Manufacturer: CHINO
- Controller Type: CHINO Controllers
- I/F: Interface to be used
- Driver: CHINO Controller(MODBUS)

Step 4. The detailed setting is displayed after Manufacturer, Controller Type, I/F, and Driver are set. Make the settings according to the usage environment.

➠ 11.4.2 Communication detail settings

Click the [OK] button when settings are completed.

POINT

The settings of connecting equipment can be confirmed in [I/F Communication Setting]. For details, refer to the following.

➠ 1.1.2 I/F communication setting

11.4.2 Communication detail settings

Make the settings according to the usage environment.

Property	Value
Transmission Speed(BPS)	9600
Data Bit	8 bit
Stop Bit	1 bit
Parity	None
Retry(Times)	3
Timeout Time(Sec)	3
Host Address	1
Delay Time(ms)	5
Format	1

Item	Description	Range
Transmission Speed	Set this item when change the transmission speed used for communication with the connected equipment. (Default: 9600bps)	9600bps, 19200bps, 38400bps, 57600bps, 115200bps
Data Bit	Set this item when change the data length used for communication with the connected equipment. (Default: 8bits)	7bits/8bits
Stop Bit	Specify the stop bit length for communications. (Default: 1bit)	1bit/2bits
Parity	Specify whether or not to perform a parity check, and how it is performed during communication. (Default: None)	None Even Odd
Retry	Set the number of retries to be performed when a communication error occurs. (Default: 3times)	0 to 5times
Timeout Time	Set the time period for a communication to time out. (Default: 1sec)	1 to 30sec
Host Address	Specify the host address (station No. of the GOT to which the controller is connected) in the connected network. (Default: 1)	1 to 99
Delay Time	Set this item to adjust the transmission timing of the communication request from the GOT. (Default: 5ms)	0 to 300ms
Format	Select the communication format. (Default: 1) Format 1: Accessible to LT230/300/400/830, DZ1000/2000, Not accessible to GT120 Format 2: Accessible to GT120	1/2

POINT

(1) Format
When connecting to GT120, specify format 2.

(2) Delay Time
When connecting to the following models, set the send delay time to 30ms or more.

Model name
DZ1000, DZ2000

(3) Communication interface setting by the Utility
The communication interface setting can be changed on the Utility's [Communication Settings] after writing [Communication Settings] of project data.
For details on the Utility, refer to the following manual.

➠ GOT2000 Series User's Manual (Utility)

(4) Precedence in communication settings
When settings are made by GT Designer3 or the Utility, the latest setting is effective.

POINT

(1) CHINO controller
For details of CHINO controller, refer to the following manual.

➠ User's Manual of the CHINO controller

(2) Converter
For details on communication settings of the converter, refer to the following manual.

➠ User's Manual for converter

Model name		Refer to
Controller	LT230, LT300	11.5.1
	LT400, LT830	11.5.2
	DZ1000, DZ2000	11.5.3
	DB1000, DB2000	11.5.4
	GT120	11.5.5
	KP1000, KP2000	11.5.6
	AL3000, AH3000	11.5.7
	SE3000	11.5.8
	JU	11.5.9
	KE3000	11.5.10
	LE5000	11.5.11
Converter	SC8-10	11.5.12

11.5.1 Connecting to LT230, LT300 Series

■1. Key Lock setting

To write the Digital and the Analog parameters, set the Key Lock setting to Lock 4.

■2. Communication settings

Set the communication settings with controller key operation.

Item	Set value
Protocol	rtU: MODBUS RTU
Function	Com: Upper communication
Station No.*1	1 to 99
Transmission speed*2	9600bps, 19200bps
Character*2 (Bit length, Parity bit, Stop bit)	5: 8bit, None, 1bit 6: 8bit, None, 2bit 7: 8bit, Even, 1bit 8: 8bit, Even, 2bit 9: 8bit, Odd, 1bit 10: 8bit, Odd, 2bit

*1 Avoid duplication of the station No. with any of the other units.

*2 Adjust the settings with GOT settings.

11.5.2 Connecting to LT400, LT830 Series

■1. Key Lock setting

To write the Digital and the Analog parameters, set thefollowing Key Lock setting

- LT400: Lock4
- LT830: Lock3

■2. Communication settings

Set the communication settings with controller key operation.

Item	Set value
Protocol	rtU: MODBUS RTU
Function	Com: Upper communication
Station No.*1	1 to 99
Transmission speed*2	9600bps, 19200bps
Character*2 (Bit length, Parity bit, Stop bit)	8N1: 8bit, None, 1bit 8N2: 8bit, None, 2bit 8E1: 8bit, Even, 1bit 8E2: 8bit, Even, 2bit 8O1: 8bit, Odd, 1bit 8O2: 8bit, Odd, 2bit

*1 Avoid duplication of the station No. with any of the other units.

*2 Adjust the settings with GOT settings.

11.5.3 Connecting to DZ1000, DZ2000 Series

■1. Key Lock setting

To write the Digital and the Analog parameters, set the Key Lock setting to Lock 2.

■2. Communication settings

Set the communication settings with controller key operation.

Item	Set value
Protocol	rtU: MODBUS RTU
Function	Com: Upper communication
Station No.*1	1 to 31
Transmission speed*2	9600bps, 19200bps
Data bit	8bits (fixed)
Stop bit	1bit (fixed)
Parity bit	None (fixed)

*1 Avoid duplication of the station No. with any of the other units.

*2 Adjust the settings with GOT settings.

11.5.4 Connecting to DB1000, DB2000 Series

■1. Communication settings

Set the communication settings with controller key operation.

Item	Set value
Protocol	MODBUS (RTU)
Function	Com: Upper communication
Station No.*1	01 to 99
Transmission speed*2	9600bps, 19200bps, 38400bps
Character	7BIT/EVEN/STOP1 7BIT/EVEN/STOP2 7BIT/ODD/STOP1 7BIT/ODD/STOP2 8BIT/NON/STOP1 8BIT/NON/STOP2 8BIT/EVEN/STOP1 8BIT/EVEN/STOP2 8BIT/ODD/STOP1 8BIT/ODD/STOP2

*1 Avoid duplication of the station No. with any of the other units.

*2 Adjust the settings with GOT settings.

11.5.5 Connecting to GT120 Series

■1. Key Lock setting

To write the Digital and the Analog parameters, set the Key Lock setting to Lock 3.

■2. Communication settings

Release the controller lock function in advance and set the following communication settings.
After completing the communication settings, set the Key Lock setting to Lock 3.

Item	Set value
Communication protocol	comr: MODBUS RTU
Station No.*1	1 to 95
Transmission speed*2	96: 9600bps 192: 19200bps
Data bit	8bits (fixed)
Stop bit*2	1bit, 2bits
Parity bit*2	nonE: None EVEn: Even odd: Odd

*1 Avoid duplication of the station No. with any of the other units.

*2 Adjust the settings with GOT settings.

11.5.6 Connecting to KP1000, KP2000

■1. Key Lock setting

To write the Digital and the Analog parameters, set the Key Lock setting.

■2. Communication settings

Set the communication settings with controller key operation.

Item	Set value
Protocol	MODBUS (RTU)
Function	COM
Station No.*1	1 to 99
Transmission speed*2	2400bps, 4800bps, 9600bps, 19200bps, 38400bps
Character*2 (Bit length, Parity bit, Stop bit)	8BIT/NON/STOP1 8BIT/NON/STOP2 8BIT/EVEN/STOP1 8BIT/EVEN/STOP2 8BIT/ODD/STOP1 8BIT/ODD/STOP2

*1 Avoid duplication of the station No. with any of the other units.

*2 Adjust the settings with GOT settings.

11.5.7 Connecting to AL3000, AH3000

■1. Key Lock setting

To write the Digital and the Analog parameters, set the Key Lock setting.

■2. Communication settings

Set the communication settings with controller key operation.

Item	Set value
Protocol	MODBUS
Transmission code	rtu
Communication type	RS232C, RS-422A, RS-485
Station No.*1	1 to 31
Transmission speed*2	2400bps, 4800bps, 9600bps, 19200bps
Character*2 (Bit length, Parity bit, Stop bit)	[8N1]: 8bit, None, 1bit [8N2]: 8bit, None, 2bit [8E1]: 8bit, Even, 1bit [8E2]: 8bit, Even, 2bit [8O1]: 8bit, Odd, 1bit [8O2]: 8bit, Odd, 2bit

*1 Avoid duplication of the station No. with any of the other units.

*2 Adjust the settings with GOT settings.

11.5.8 Connecting to SE3000

■1. Key Lock setting

To write the Digital and the Analog parameters, set the Key Lock setting.

■2. Communication settings

Make the communication settings using the engineering software package (PASS)

Item	Set value
Protocol	MODBUS RTU
Station No.*1*3	1 to 31
Transmission speed*2*3	9600bps, 19200bps
Data bit	8bits (fixed)
Parity bit*2	Even, Odd, Non
Stop bit*2	1bit, 2bits
Transmission code	Binary (fixed)
Error check	CRC-16 (fixed)

*1 Avoid duplication of the station No. with any of the other units.
*2 Adjust the settings with GOT settings.
*3 Station No. and Transmission speed can also be set by switch SW1.

■3. Setting by Switch (SW1)

Station No. and Transmission speed can be set.

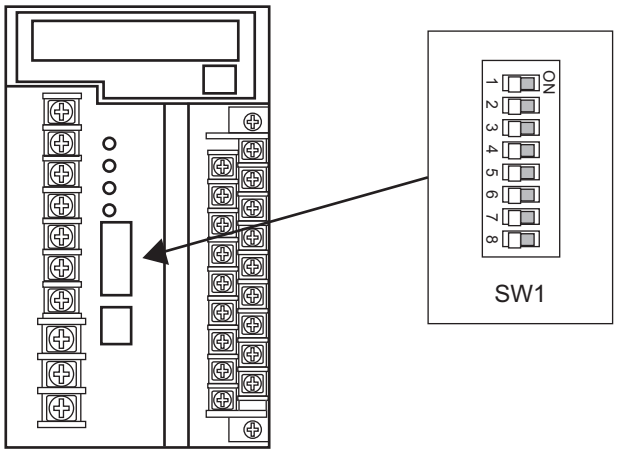

(1) Station No.

SW1-1	SW1-2	SW1-3	SW1-4	SW1-5	Station No.
OFF	OFF	OFF	OFF	OFF	1
ON	OFF	OFF	OFF	OFF	1
OFF	ON	OFF	OFF	OFF	2
ON	ON	OFF	OFF	OFF	3
			:		
			:		
ON	OFF	ON	ON	ON	29
OFF	ON	ON	ON	ON	30
ON	ON	ON	ON	ON	31

(2) Transmission speed

SW1-6	SW1-7	communication port	Transmission speed
OFF	OFF	Upper communication	9600bps
OFF	ON	Upper communication	19200bps
ON	OFF	ENG	-
ON	ON	User setting inhibited	

■4. Setting by Switch (SW2)

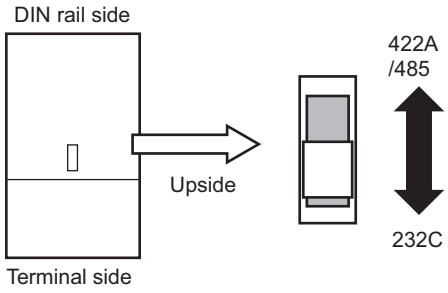

SW2	
Front side (Terminal side)	Rear side (DIN rail side)
RS232C	RS422A/485

11.5.9 Connecting to JU

■1. Key Lock setting

To write the Digital and the Analog parameters, set the Key Lock setting.

■2. Communication settings

Set the communication settings with controller key operation.

Item	Set value
Protocol	rtU
Station No.*1	1 to 99
Transmission speed*2	9600bps, 19200bps
Character*2 (Bit length, Parity bit, Stop bit)	[8N1]: 8bit, None, 1bit [8N2]: 8bit, None, 2bit [8E1]: 8bit, Even, 1bit [8E2]: 8bit, Even, 2bit [8O1]: 8bit, Odd, 1bit [8O2]: 8bit, Odd, 2bit

*1 Avoid duplication of the station No. with any of the other units.
*2 Adjust the settings with GOT settings.

11.5.10 Connecting to KE3000

■1. Key Lock setting

To write the Digital and the Analog parameters, set the Key Lock setting.

■2. Communication settings

Make the communication settings by operating the switches SW2 and SW3 of the module.

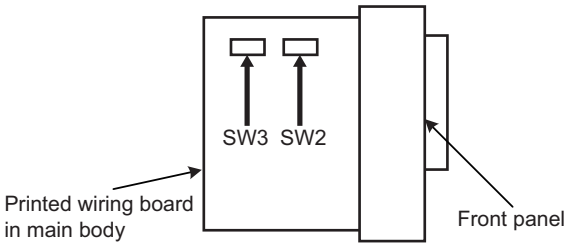

(1) Setting by SW2

Item	Set value	SW2-2	SW2-3
Transmission code*2	MODBUS RTU	OFF	-
Transmission speed*1	9600bps	-	OFF
	19200bps	-	ON
Transmission character structure*2	8bits, None, 1bit (fixed)	-	-

*1 Adjust the settings with GOT settings.
*2 When the transmission code is MODBUS RTU, the setting of the transmission character structure is fixed.

(2) Setting by SW3

Set the station No. as follows.

SW3-4	SW3-5	SW3-6	SW3-7	SW3-8	Station No.*1
OFF	OFF	OFF	OFF	OFF	1
ON	OFF	OFF	OFF	OFF	1
OFF	ON	OFF	OFF	OFF	2
ON	ON	OFF	OFF	OFF	3
			:		
ON	OFF	ON	ON	ON	29
OFF	ON	ON	ON	ON	30
ON	ON	ON	ON	ON	31

*1 Avoid duplication of the station No. with any of the other units.

11.5.11 Connecting to LE5000

■1. Key Lock setting

To write the Digital and the Analog parameters, set the Key Lock setting.

■2. Communication settings

Set the communication settings with controller key operation.

Item	Set value
RTU/ASCII	RTU
Station No.*1	1 to 99
Transmission speed*2	9600bps, 19200bps
Character*2 (Bit length, Parity bit, Stop bit)	[8N1]: 8bit, None, 1bit [8N2]: 8bit, None, 2bit [8E1]: 8bit, Even, 1bit [8E2]: 8bit, Even, 2bit [8O1]: 8bit, Odd, 1bit [8O2]: 8bit, Odd, 2bit

*1 Avoid duplication of the station No. with any of the other units.

*2 Adjust the settings with GOT settings.

11.5.12 Connecting to converter SC8-10

■1. Communication settings

Make the communication settings using setting switches.

Item	Set value
Transmission speed select switch*1	9600bps, 19200bps
Communication type switch	RS-485, RS-422

*1 Adjust the settings with GOT and controller settings.

■2. Settings by switch

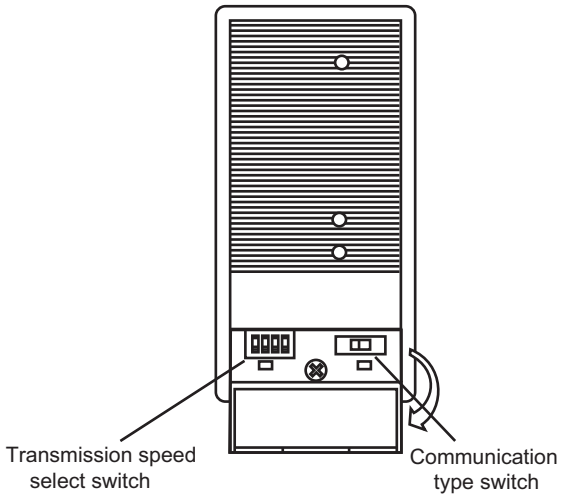

(1) Transmission speed setting

Setting item	Set value	Switch No.			
		1	2	3	4
Transmission speed	9600bps	OFF	ON	OFF	OFF
	19200bps	OFF	OFF	ON	OFF

(2) Communication type setting

Setting item
RS-485/RS-422

11.5.13 Station number setting

Set each station number so that no station number overlaps.
The station number can be set without regard to the cable connection order. There is no problem even if station numbers are not consecutive.

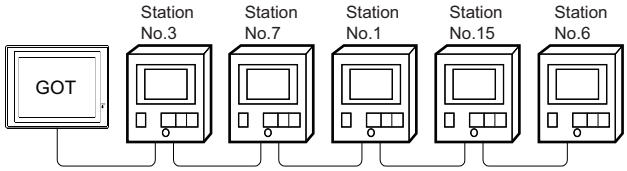

Examples of station number setting

■1. Direct specification

When setting the device, specify the station number of the controller of which data is to be changed.

Model name	Specification range	Refer to
LT230, LT300, LT400, LT830	1 to 99	11.5.1 11.5.2
DZ1000, DZ2000	1 to 31	11.5.3
DB1000, DB2000	1 to 99	11.5.4
GT120	1 to 95	11.5.5
KP1000, KP2000	1 to 99	11.5.6
AL3000, AH3000	1 to 31	11.5.7
SE3000	1 to 31	11.5.8
JU	1 to 99	11.5.9
KE3000	1 to 31	11.5.10
LE5000	1 to 99	11.5.11

■2. Indirect specification

When setting the device, indirectly specify the station number of the controller of which data is to be changed using the 16-bit GOT internal data register (GD10 to GD25).
When specifying the station No. from 100 to 115 on GT Designer3, the value of GD10 to GD25 compatible to the station No. specification will be the station No. of the controller.

Specification station NO.	Compatible device	Setting range
100	GD10	1 to 99: LT230, LT300, LT400, LT830 DB1000, DB2000, KP1000, KP2000, JU, LE5000 1 to 31: DZ1000, DZ2000, AL3000 AH3000, KE3000, SE3000 1 to 95: GT120 For the setting other than the above, error (dedicated device is out of range) will occur.
101	GD11	
102	GD12	
103	GD13	
104	GD14	
105	GD15	
106	GD16	
107	GD17	
108	GD18	
109	GD19	
110	GD20	
111	GD21	
112	GD22	
113	GD23	
114	GD24	
115	GD25	

■3. All station specification

Target station differs depending on write-in operation or read-out operation.

- For write-in operation, all station will be a target.
- For read-out operation, only one station will be a target.
- All station specification is not available for KE3000. Do not use the all station specification for systems which include KE3000.

11.6 Device Range that Can Be Set

The device ranges of controller that can be used for GOT are as follows.
Note that the device ranges in the following tables are the maximum values that can be set in GT Designer3.
The device specifications of controllers may differ depending on the models, even though belonging to the same series.
Please make the setting according to the specifications of the controller actually used.
When a non-existent device or a device number outside the range is set, other objects with correct device settings may not be monitored.

■1. Setting item

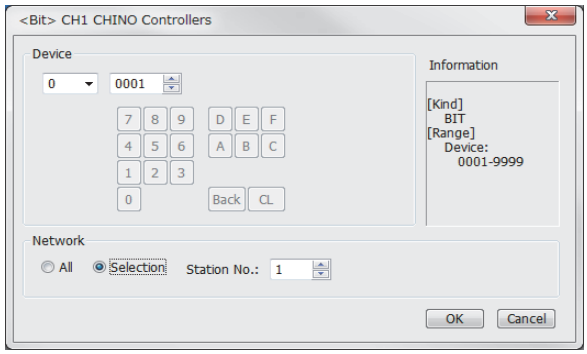

Item	Description	
Device	Set the device name, device number, and bit number. The bit number can be set only when specifying the bit of word device.	
Information	Displays the device type and setting range which are selected in [Device].	
Network	Set the monitor target of the set device.	
	All	Select this item when writing data to all controllers connected. During monitoring, the controller which is set for [Host Address] of the communication detail settings is monitored. (When inputting data with the numerical input function, data is written to all the connected controllers during input. The controller set for [Host Address] is monitored during other than input (displaying).)
	Station No.	Select this item when monitoring the controller of the specified station No. After selecting, set the station No. of the controller in the following range. 1 to 99:To monitor the controller of the specified station No. 100 to 115:To specify the station No. of the controller to be monitored by the value of GOT data register (GD).*1

*1 The following shows the relation between station numbers of the controller and the GOT data register.

Station No.	GOT data register (GD)	Setting range
100	GD10	1 to 99 (If setting a value outside the range above, a device range error occurs.)
101	GD11	
:	:	
114	GD24	
115	GD25	

POINT

Device settings of CHINO controller
Devices are set with reference numbers.
For parameters corresponding to each reference number, refer to the manual of the controller to be used.

11.6.1 CHINO controller (CHINO Controllers)

Device name		Setting range	Device No. representation
Bit device	Digital parameter (0)	00001 to 09999	Decimal
	Digital input data (1)*1	10001 to 19999	
Word device	Analog input data (3)*1	30001 to 39999	Decimal
	Analog parameter (4)	40001 to 49999	

*1 Only reading is possible.

11.7 Precautions

■1. Station number settings of temperature controller

In the system configuration, the controller with the station number set with the host address must be included.
For details of host address setting, refer to the following.

➠ 11.4.1 Setting communication interface (Communication settings)

■2. GOT clock control

Since the controller does not have a clock function, the settings of [time adjusting] or [time broad cast] by GOT clock control will be disabled.

■3. Disconnecting some of multiple connected equipment

The GOT can disconnect some of multiple connected equipment by setting GOT internal device.For example, the faulty station where a communication timeout error occurs can be disconnected from connected equipment.
For details of GOT internal device setting, refer to the following manual.

➠ GT Designer3 (GOT2000) Screen Design Manual

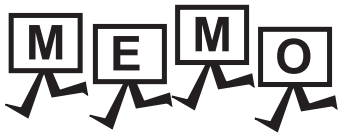
MEMO

12. CONNECTION TO TOSHIBA PLC

12.1 Connectable Model List . . . . . 12 - 2
12.2 Serial Connection . . . . . 12 - 3
12.3 Ethernet Connection . . . . . 12 - 12
12.4 Device Range that Can Be Set. . . . . 12 - 21

12. CONNECTION TO TOSHIBA PLC

12.1 Connectable Model List

The following table shows the connectable models.

Series	Model name	Clock	Communication Type	Connectable GOT	Refer to
PROSEC T Series	T2 (PU224)	○	RS-422	GT27 GT25 GT23	➠ 12.2.1
	T3	○			
	T3H	○			
	T2E	○	RS-232 RS-422		
	T2N	○			
PROSEC V Series	model 2000(S2)	○	RS-422	GT27 GT25 GT23	➠ 12.2.2
	model 2000(S2T)	○			
	model 2000(S2E)	○			
	model 3000 (S3)	○			
Unified Controller nv Series	Controller type1 PU811	○	Ethernet	GT27 GT25 GT23	➠ 12.2.3

12.2 Serial Connection

12.2.1 System configuration for connecting to PROSEC T series

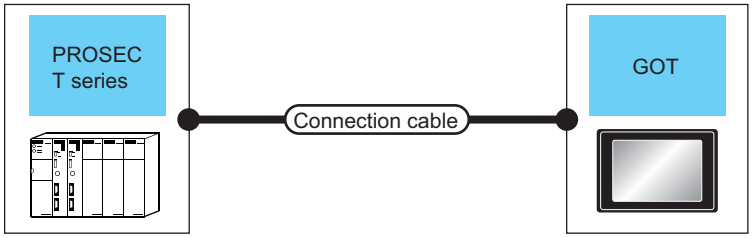

PLC		Connection cable		GOT		Number of connectable equipment
Model name	Communication Type	Cable model Connection diagram number	Max. distance	Option device	Model	
T2 (PU224) T3 T3H	RS-422	GT09-C30R40501-15P(3m) GT09-C100R40501-15P(10m) GT09-C200R40501-15P(20m) GT09-C300R40501-15P(30m) or User preparing RS422 connection diagram 1)	1km	- (Built into GOT)	GT27 GT25 GT23	1 GOT for 1 PLC
				GT15-RS4-9S	GT27 GT25	
T2E	RS-232	GT09-C30R40102-9P(3m) or User preparing RS232 connection diagram 1)	15m	- (Built into GOT)	GT27 GT25 GT23	
				GT15-RS2-9P	GT27 GT25	
	RS-422	GT09-C30R40502-6C(3m) GT09-C100R40502-6C(10m) GT09-C200R40502-6C(20m) GT09-C300R40502-6C(30m) or User preparing RS422 connection diagram 2)	1km	- (Built into GOT)	GT27 GT25 GT23	
				GT15-RS4-9S	GT27 GT25	
T2N	RS-232	GT09-C30R20502-15P(3m) or User preparing RS232 connection diagram 2)	15m	- (Built into GOT)	GT27 GT25 GT23	
				GT15-RS2-9P	GT27 GT25	
	RS-422	GT09-C30R40503-15P(3m) GT09-C100R40503-15P(10m) GT09-C200R40503-15P(20m) GT09-C300R40503-15P(30m) or User preparing RS422 connection diagram 3)	1km	- (Built into GOT)	GT27 GT25 GT23	
				GT15-RS4-9S	GT27 GT25	

12.2.2 System configuration for connecting to PROSEC V series

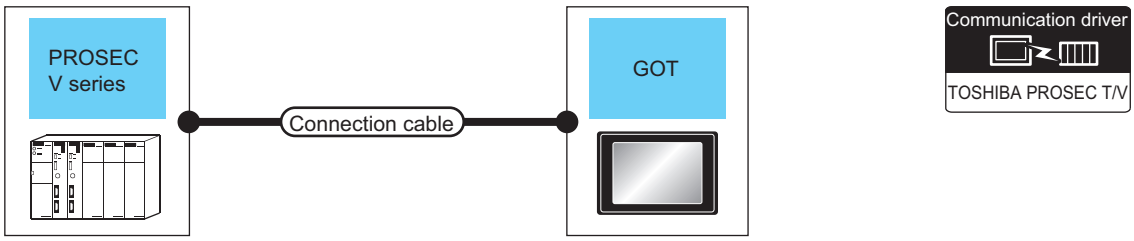

PLC		Connection cable		GOT		Number of connectable equipment
Model name	Communication Type	Cable model Connection diagram number	Max. distance	Option device	Model	
model 2000 (S2) model 2000 (S2T) model 2000 (S2E)	RS-422	GT09-C30R40502-6C(3m) GT09-C100R40502-6C(10m) GT09-C200R40502-6C(20m) GT09-C300R40502-6C(30m) or User preparing RS422 connection diagram 2)	1km	- (Built into GOT)	GT27 GT25 GT23	1 GOT for 1 PLC
				GT15-RS4-9S	GT27 GT25	
model 3000 (S3)	RS-422	GT09-C30R40501-15P(3m) GT09-C100R40501-15P(10m) GT09-C200R40501-15P(20m) GT09-C300R40501-15P(30m) or User preparing RS422 connection diagram 1)	1km	- (Built into GOT)	GT27 GT25 GT23	
				GT15-RS4-9S	GT27 GT25	

12.2.3 Connection Diagram

The following diagram shows the connection between the GOT and the PLC.

■1. RS-232 cable

(1) Connection diagram

(a) RS232 connection diagram 1)

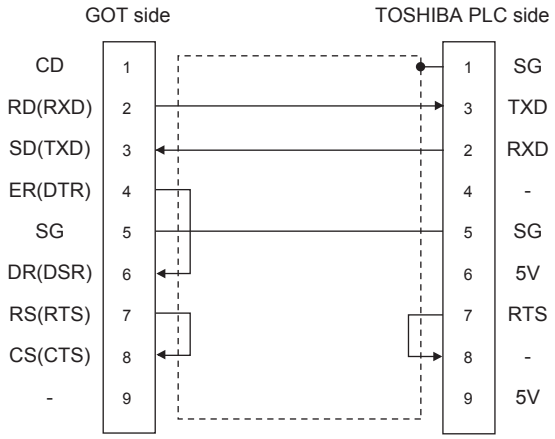

(b) RS232 connection diagram 2)

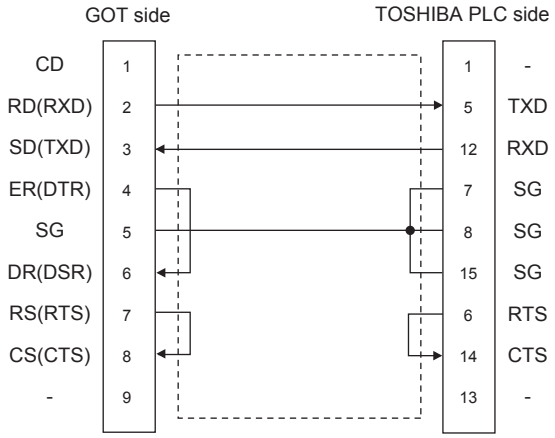

(2) Precautions when preparing a cable

(a) Cable length

The length of the RS-232 cable must be 15m or less.

(b) GOT side connector

For the GOT side connector, refer to the following.

➠ 1.4.1 GOT connector specifications

(c) TOSHIBA PLC side connector

Use the connector compatible with the TOSHIBA PLC.
For details, refer to the TOSHIBA PLC user's manual.

■2. RS-422 cable

(1) Connection diagram

(a) RS422 connection diagram 1)

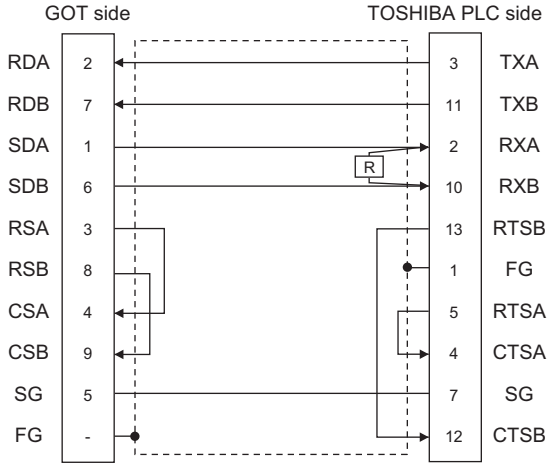

(b) RS422 connection diagram 2)

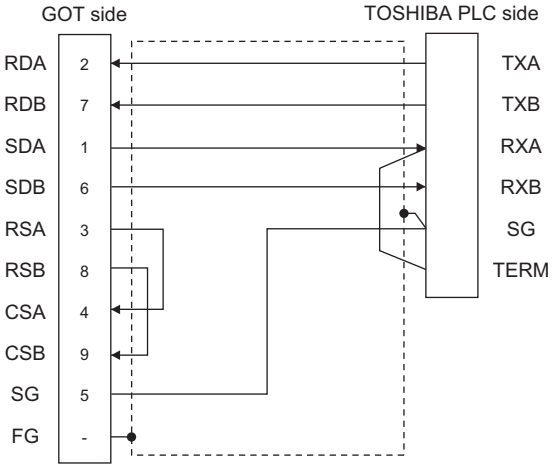

(c) RS422 connection diagram 3)

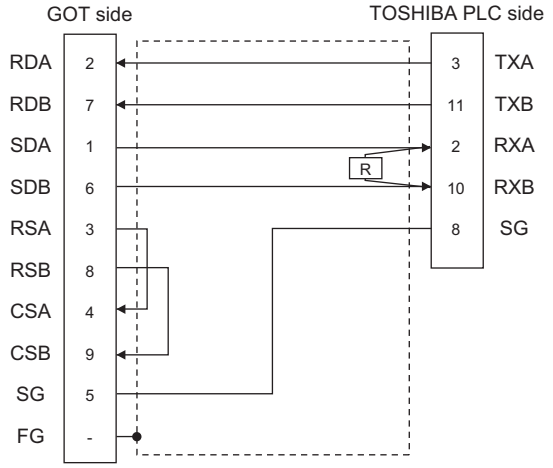

(2) Precautions when preparing a cable

(a) Cable length

The length of the RS-422 cable must be 1km or less.

(b) GOT side connector

For the GOT side connector, refer to the following.

➠ 1.4.1 GOT connector specifications

(c) TOSHIBA PLC side connector

Use the connector compatible with the TOSHIBA PLC.
For details, refer to the TOSHIBA PLC user's manual.

(3) Setting terminating resistors

(a) GOT side

Set the terminating resistor setting switch of the
For details of terminating resistor settings, refer to the following.

➠ 1.4.3 Terminating resistors of GOT

(b) TOSHIBA PLC side

When connecting an TOSHIBA PLC to a GOT, a terminating resistor must be set to the TOSHIBA PLC.
For the setting of the terminating resistor, refer to the following manual.

➠ TOSHIBA PLC user's Manual

- T2 (PU224), T2N, T3, T3H, model 3000 (S3)
  Connect the terminating resistor (1/2W-120Ω) across RXA and RXB.
- T2E, model 2000 (S2, S2T)
  Short across the RXA and TERM terminals.

12.2.4 GOT Side Settings

■1. Setting communication interface (Communication settings)

Set the channel of the equipment to be connected to the GOT.

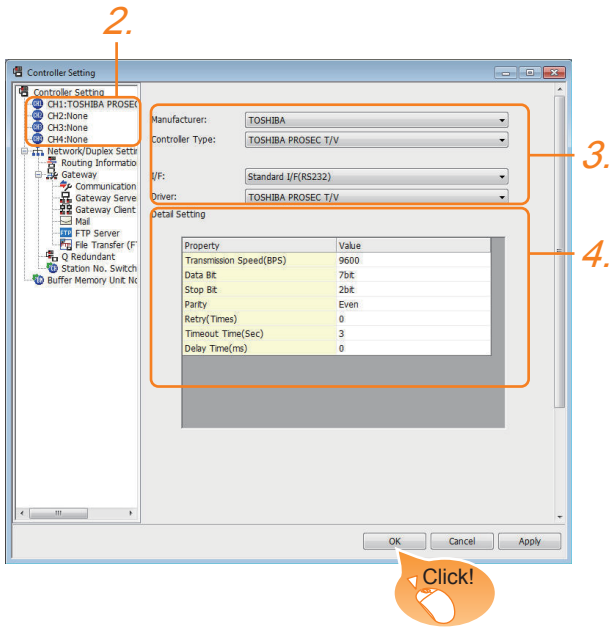

Step 1. Select [Common] → [Controller Setting] from the menu.

Step 2. The Controller Setting window is displayed. Select the channel to be used from the list menu.

Step 3. Set the following items.

- Manufacturer: TOSHIBA
- Controller Type: TOSHIBA PROSEC T/V
- I/F: Interface to be used
- Driver: TOSHIBA PROSEC T/V

Step 4. The detailed setting is displayed after Manufacturer, Controller Type, I/F, and Driver are set. Make the settings according to the usage environment.

➠ ■2. Communication detail settings

Click the [OK] button when settings are completed.

POINT

The settings of connecting equipment can be confirmed in [I/F Communication Setting]. For details, refer to the following.

➠ 1.1.2 I/F communication setting

■2. Communication detail settings

Make the settings according to the usage environment.

Property	Value
Transmission Speed(BPS)	9600
Data Bit	7 bit
Stop Bit	2 bit
Parity	Even
Retry(Times)	0
Timeout Time(Sec)	3
Delay Time(ms)	0

Item	Description	Range
Transmission Speed	Set this item when change the transmission speed used for communication with the connected equipment. (Default: 9600bps)	4800bps, 9600bps, 19200bps, 38400bps, 57600bps, 115200bps
Data Bit	Set this item when change the data length used for communication with the connected equipment. (Default: 7bits)	7bit, 8bit
Stop Bit	Specify the stop bit length for communications. (Default: 2bit)	1bit, 2bit
Parity	Specify whether or not to perform a parity check, and how it is performed during communication. (Default: Even)	None, Even, Odd
Retry	Set the number of retries to be performed when a communication error occurs. (Default: 0time)	0 to 5times
Timeout Time	Set the time period for a communication to time out. (Default: 3sec)	1 to 30sec
Delay Time	Set this item to adjust the transmission timing of the communication request from the GOT. (Default: 0ms)	0 to 300 (ms)

POINT

(1) Communication interface setting by the Utility

The communication interface setting can be changed on the Utility's [Communication Settings] after writing [Communication Settings] of project data.

For details on the Utility, refer to the following manual.

➠ GOT2000 Series User's Manual (Utility)

(2) Precedence in communication settings

When settings are made by GT Designer3 or the Utility, the latest setting is effective.

12.2.5 PLC Side Setting

POINT

TOSHIBA PLC

For details of the TOSHIBA PLC, refer to the following manual.

➠ TOSHIBA PLC user's Manual

Model name		Refer to
PLC CPU	T2 (PU224), T2E, T2N	12 - 10
	T3, T3H	12 - 11
	model 2000 (S2, S2T, S2E), model 3000 (S3)	12 - 11

■1. Connecting to T2 (PU224), T2E or T2N

(1) Switch setting

Set the switches accordingly.

(a) Operation mode setting switch

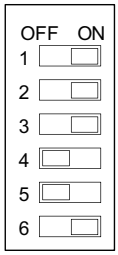

Switch No.	Settings	Setting details
4	OFF (fixed)	Computer link
5	OFF (fixed)	

(b) DIP switch on module PCB (T2N only)

Switch No.	Set value	
	For RS-232 communication	For RS-422 communication
DIP switch: No. 1	ON (RS-232C)	OFF (RS-485*1)

*1 Can be used as RS-422.

(2) Transmission parameter setting

Enter the transmission parameters.

Item	Set value
Transmission speed*1*2*3	4800bps, 9600bps, 19200bps
Data bit	7bit
Stop bit	2bit
Parity bit	Even
Station No.	1

*1 Indicates only the transmission speeds that can be set on the GOT side.

*2 Fixed to 9600bps for T2E only.

*3 The transmission speed setting must be consistent with that of the GOT side.
For the transmission speed setting on the GOT side, refer to the following.

➠ ■1. Setting communication interface (Communication settings)

■2. Connecting to T3 or T3H

Enter the transmission parameters.

Item	Set value
Transmission speed*1*2	4800bps, 9600bps, 19200bps
Data bit	7bit
Stop bit	2bit
Parity bit	Even
Station No.	1

*1 Indicates only the transmission speeds that can be set on the GOT side.
*2 The transmission speed setting must be consistent with that of the GOT side.
For the transmission speed setting on the GOT side, refer to the following.

➠ ■1. Setting communication interface (Communication settings)

■3. Connecting to model 2000 (S2, S2T, S2E), model 3000 (S3)

Enter the transmission parameters.

Item	Set value
Transmission method	RS485*1
RS485	COM1
Timeout time	5sec
Transmission speed*2*3	4800bps, 9600bps, 19200bps
Data bit	7bit
Stop bit	2bit
Parity bit	Even
Station No.	1

*1 Can be used as RS-422.
*2 Indicates only the transmission speeds that can be set on the GOT side.
*3 The transmission speed setting must be consistent with that of the GOT side.
For the transmission speed setting on the GOT side, refer to the following.

➠ ■1. Setting communication interface (Communication settings)

12.3 Ethernet Connection

12.3.1 System configuration for connecting to Unified Controller nv Series

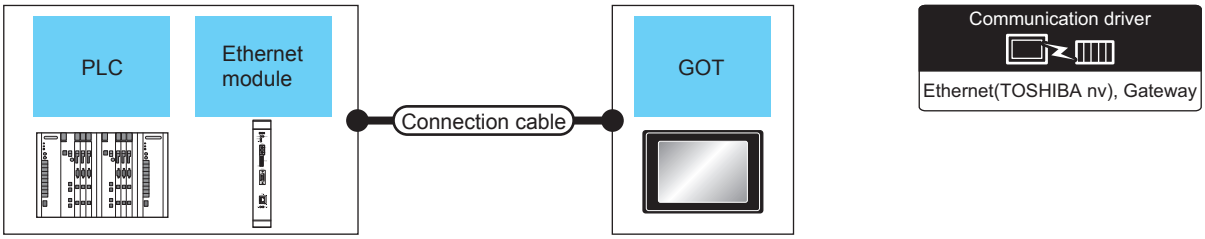

PLC		Connection cable		GOT		Number of connectable equipment
Series	Ethernet module*3	Cable model	Maximum segment length*2	Option device*5	Model	
Unified Controller nv Series	EN811	Twisted pair cable*1 • 10BASE-T Shielded twisted pair cable (STP) or unshielded twisted pair cable (UTP): Category 3, 4, and 5 • 100BASE-TX Shielded twisted pair cable (STP): Category 5 and 5e	100m	- (Built into GOT)	GT27 GT25 GT23	When PLC:GOT is N: 1 The number of PLCs for 1 GOT 32 or less When PLC:GOT is 1: N The number of GOTs for 1 PLC No limit number*4

*1 The destination connected with the twisted pair cable varies with the configuration of the applicable Ethernet network system.
Connect to the Ethernet module, hub, transceiver or other system equipment corresponding to the applicable Ethernet network system.
Use cables, connectors, and hubs that meet the IEEE802.3 10BASE-T/100BASE-TX standard.

*2 A length between a hub and a node.
The maximum distance differs depending on the Ethernet device to be used.
The following shows the number of the connectable nodes when a repeater hub is used.
- 10BASE-T: Max. 4 nodes for a cascade connection (500m)
- 100BASE-TX: Max. 2 nodes for a cascade connection (205m)

When switching hubs are used, the cascade connection between the switching hubs has no logical limit for the number of cascades.
For the limit, contact the switching hub manufacturer.

*3 Product manufactured by TOSHIBA Corporation. For details of the product, contact TOSHIBA Corporation.

*4 There is no restriction for the number of GOTs. However, if the number of GOTs increases, the communication becomes high-loaded, and it may affect the communication performance.

*5 The GOT2000 Series Ethernet communication unit (GT25-J71E71-100) is not applicable.

12.3.2 GOT side settings

■1. Setting communication interface (Communication settings)

Set the channel of the connected equipment.

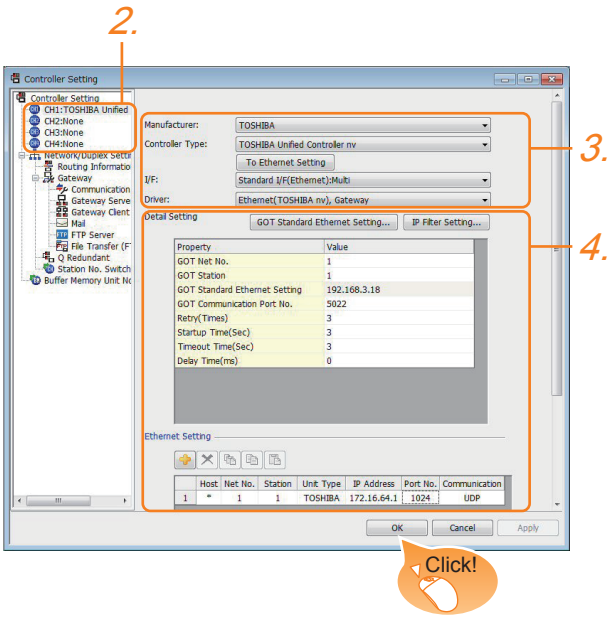

Step 1. Select [Common] → [Controller Setting] from the menu.

Step 2. The Controller Setting window is displayed. Select the channel to be used from the list menu.

Step 3. Set the following items.

- Manufacturer: TOSHIBA
- Controller Type: TOSHIBA Unified Controller nv
- I/F: Interface to be used
- Driver: Ethernet (TOSHIBA nv), Gateway

Step 4. The detailed setting is displayed after Manufacturer, Controller Type, I/F, and Driver are set. Make the settings according to the usage environment.

➠ 12.3.2 ■2. Communication detail settings

Click the [OK] button when settings are completed.

POINT

The settings of connecting equipment can be confirmed in [I/F Communication Setting]. For details, refer to the following.

➠ 1.1.2 I/F communication setting

■2. Communication detail settings

Make the settings according to the usage environment.

Property	Value
GOT Net No.	1
GOT Station	1
GOT Standard Ethernet Setting	192.168.3.18
GOT Communication Port No.	5022
Retry(Times)	3
Startup Time(Sec)	3
Timeout Time(Sec)	3
Delay Time(ms)	0

Item	Description	Range
GOT Net No.	Set the network No. of the GOT. (Default: 1)	1 to 239
GOT Station*1	Set the station No. of the GOT. (Default: 1)	1 to 254
GOT Standard Ethernet Setting	Set the GOT IP address, subnet mask, default gateway, peripheral S/W communication port No., transparent port No.	➠ ■ 3. GOT Standard Ethernet Setting
GOT Communication Port No.	Set the GOT port No. for the connection with the Ethernet module. (Default: 5022)	1024 to 5010, 5014 to 65534 (Except for 5011 to 5013 and 49153 to 49170)
Retry	Set the number of retries to be performed when a communication timeout occurs. When receiving no response after retries, the communication times out. (Default: 3times)	0 to 5times
Startup Time	Specify the time period from the GOT startup until GOT starts the communication with the PLC CPU. (Default: 3sec)	3 to 255sec
Timeout Time	Set the time period for a communication to time out. (Default: 3sec)	1 to 90sec
Delay Time	Set the delay time for reducing the load of the network/ destination PLC. (Default: 0ms)	0 to 10000 (×10ms)

*1 Each of [GOT Station] set in the communication detail setting and [Station] set in the Ethernet setting must be set to different station numbers.

➠ ■4. Ethernet setting

■3. GOT Standard Ethernet Setting

The GOT can be connected to a different network by using the following interface.

- Standard Ethernet interface:
  Set the [GOT IP Address] and [Subnet Mask] in the GOT built-in Ethernet interface.
- Extension Ethernet interface:
  Set the [GOT Extension IP Address] and [Extension Subnet Mask] in the Ethernet interface for the Ethernet communication module.
  BootOS Version Z or higher is required to use the extension Ethernet Interface.
  For details on writing the BootOS, refer to the following manual.

➠ GT Designer3 (GOT2000) Screen Design Manual

The standard Ethernet interface and extension Ethernet interface use the same [Default Gateway].

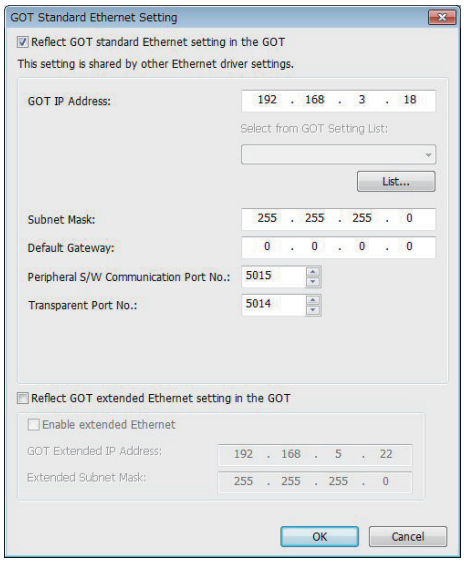

Item	Description	Range
The GOT standard Ethernet settings are applied on the GOT unit.	The standard Ethernet settings are applied on GOT.	-
GOT IP Address	Set the IP address of the Standard Ethernet interface. (Default: 192.168.3.18)	0.0.0.0 to 255.255.255.255
Select from GOT Setting List	Select the set GOT in the [GOT Setting List] dialog. . GT Designer3 (GOT2000) Help	-
Subnet Mask	Set the subnet mask for the sub network. (Only for connection via router) If the sub network is not used, the default value is set. (Default: 255.255.255.0)	0.0.0.0 to 255.255.255.255
Default Gateway	Set the router address of the default gateway where the GOT is connected. (Only for connection via router) (Default: 0.0.0.0)	0.0.0.0 to 255.255.255.255
Peripheral S/W Communication Port No.	Set the GOT port No. for the communication with the peripheral S/W. (Default: 5015)	1024 to 65534 (Except for 5011 to 5013, 49153 to 49170)
Transparent Port No.	Set the GOT port No. for the transparent function. (Default: 5014)	1024 to 65534 (Except for 5011 to 5013, 49153 to 49170)
The GOT extension Ethernet settings are applied on the GOT unit.*1	The extension Ethernet settings are applied on GOT.	-
Enabling the extension Ethernet *1	Enable the extension Ethernet settings. An error message will appear if all of the [Extension I/F Setting] in the [I/F communication setting] dialog are used. Always set on of the [Extension I/F Setting] to [Not used]. . 1.1.2 I/F communication setting	-
GOT Extension IP Address *1	Set the IP address of the Extension Ethernet. (Default: 192.168.5.22)	0.0.0.0 to 255.255.255.255
Extension Subnet Mask *1	Set the subnet mask for the sub network. (Only for connection via router) If the sub network is not used, the default value is set. (Default:255.255.255.0)	0.0.0.0 to 255.255.255.255

*1 For the microcomputer connection (Ethernet), the GOT2000 Series Ethernet communication unit (GT25-J71E71-100) is not applicable. Use the GOT built-in standard Ethernet port.

POINT

GOT IP address setting

For GOT IP address of each Ethernet setting, set a value that network system is different from each other.

(Example of setting)

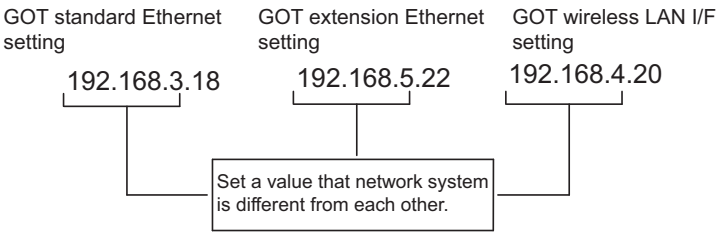

■4. Ethernet setting

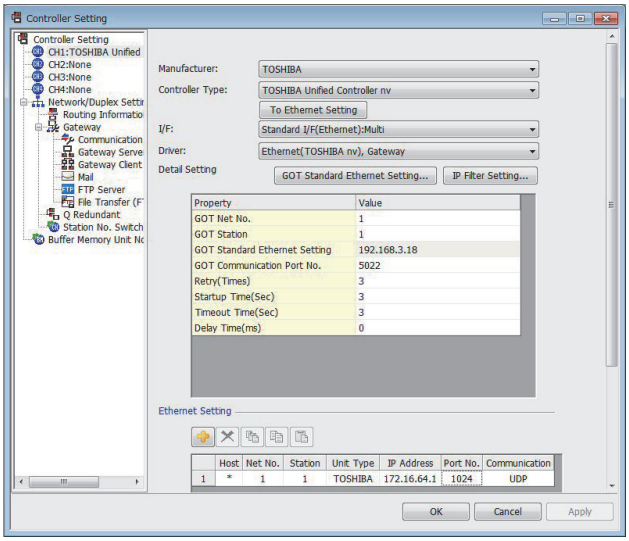

Item	Description	Set value
Host	The host is displayed. (The host is indicated with an asterisk (*).)	-
N/W No.	Set the network No. of the connected Ethernet module. (Default: 1)	1 to 239
Station*1	Set the station No. of the connected Ethernet module. (Default: 1)	1 to 254
Type	TOSHIBA (fixed)	TOSHIBA (fixed)
IP Address	Set the IP address of the connected Ethernet module. (Default: 172.16.64.1)	PLC side IP address
Port No.	Set the port No. of the connected Ethernet module. (Default: 1024)	1024 to 65534
Communication format	UDP (fixed)	UDP (fixed)

*1 Each of [GOT Station] set in the communication detail setting and [Station] set in the Ethernet setting must be set to different station numbers.

➠ ■2. Communication detail settings

POINT

(1) Communication interface setting by the Utility
The communication interface setting can be changed on the Utility's [Communication setting] after writing [Communication Settings] of project data.
For details on the Utility, refer to the following manual.

➠ GOT2000 Series User's Manual (Utility)

(2) Precedence in communication settings
When settings are made by GT Designer3 or the Utility, the latest setting is effective.

■5. IP Filter Setting

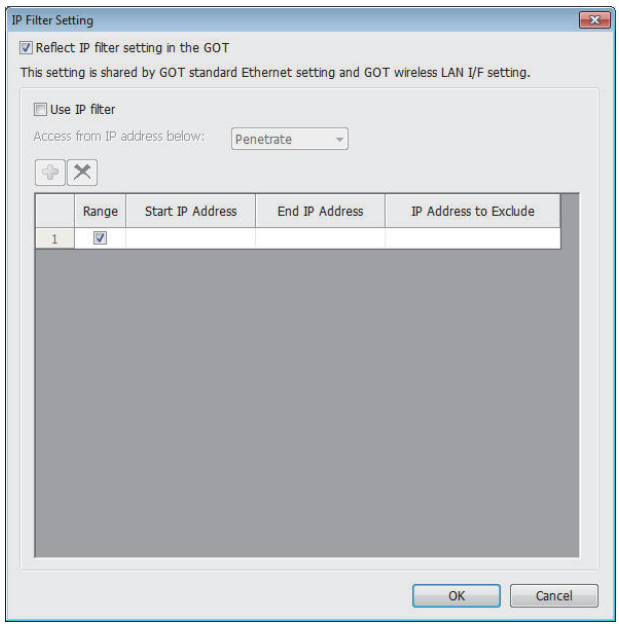

To improve security, the GOT 2000 series supports the IP Filter Setting.
For details on the IP Filter Setting, refer to the following manual.

➠ GT Designer3 (GOT2000) Screen Design Manual

12.3.3 PLC side setting

POINT

TOSHIBA PLC

For details of TOSHIBA PLCs, refer to the following manual.

TOSHIBA PLC user's Manual

■1. Setting of operation mode switch and station No. switch

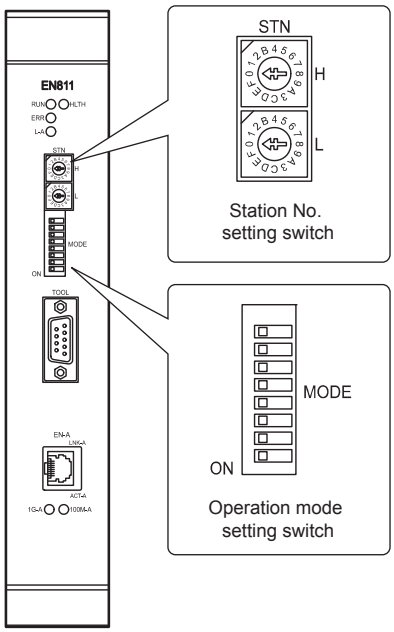

(1) Station No. setting switch

The station No. setting switches are hexadecimal rotary switches that determine the station No. on the Ethernet network.

Set the station address (1 to 254) that has been assigned upon system configuration in a HEX code.

Assign an address with a different value to each of the nodes in the system.

Switch name	Setting details	Setting range
STN-H	Upper address : 0 to F (Hex.)	01 to FE (Hex.)
STN-L	Lower address : 0 to F (Hex.)	

(2) Operation mode setting switch

(a) Operation mode

Switch No.	Settings		
1	OFF	ON	OFF
2	OFF	OFF	ON
3	OFF	OFF	OFF
Operation mode	Normal	For maintenance	

Switch No.	Settings
4	Not in use
5	

(b) IP address type

Switch No.	Settings			
6	OFF	OFF	OFF	ON
7	OFF	ON	OFF	ON
8	OFF	OFF	ON	ON
Operation mode	Class B 172.16.64.XX	Reserved	Class C 192.168.0.XX	Tool setting

- Class B 172.16.64.XX
  XX indicates the value of the station No. setting switches.
  Subnet mask : 255.255.192.0
- Class B 192.168.0.XX
  XX indicates the value of the station No. setting switches.
  Subnet mask : 255.255.255.0
- Tool setting
  It can be set freely from the engineering tool, and the value has precedence over the value of the station No. setting switches.

12.3.4 Precautions

■1. Delay of device communication

Note that if a non-existent station, or a station which power is turned OFF is monitored, the communication of normal stations is also delayed.

■2. Redundant system

When configuring a redundant system, the "Multicast address setting" for the configured PLC pair (System A: Primary, System B: Secondary) is required.

12.4 Device Range that Can Be Set

The device ranges of controller that can be used for GOT are as follows.
Note that the device ranges in the following tables are the maximum values that can be set in GT Designer3.
The device specifications of controllers may differ depending on the models, even though belonging to the same series.
Please make the setting according to the specifications of the controller actually used.
When a non-existent device or a device number outside the range is set, other objects with correct device settings may not be monitored.

■1. Setting item

TOSHIBA PROSEC T/V Series

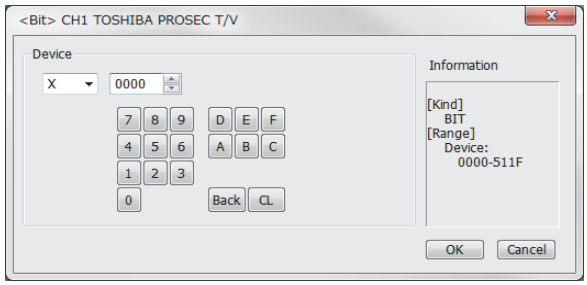

TOSHIBA Unified Controller nv Series

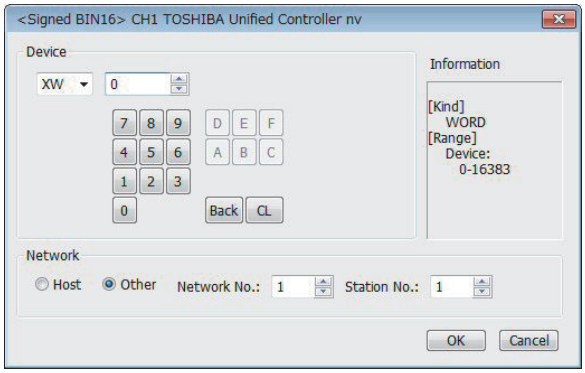

Item		Description
Device		Set the device name, device number, and bit number. The bit number can be set only when specifying the bit of word device.
Information		Displays the device type and setting range which are selected in [Device].
Network		Set the station number of the controller to be monitored.
	Host	Select this item for monitoring the host controller.
	Other	Select this for monitoring other controllers. After selecting the item, set the station number of the controller to be monitored. NW No.: Set the network No. Station No.: Set the station No.

POINT

(1) Device settings of TOSHIBA PLC

(a) When setting a relay as a bit device

Set the device using the format of word address (DEC) + bit address (HEX).

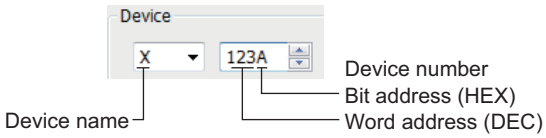

(b) When setting a relay as a word device

Set the device using the format of word address (DEC).

For the device name setting, enter "w" before the bit device name.

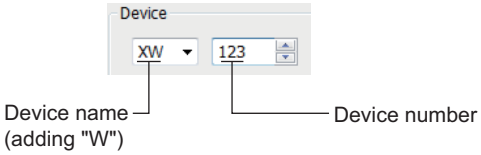

(2) Notation of device address (when using PROSEC V series)

The notation of device address setting is different between the TOSHIBA PLC peripheral software and GOT.

For the difference of notations between peripheral softwares and GOT, refer to the following.

➠ ■2. TOSHIBA PLC (TOSHIBA PROSEC T/V Series)

■2. TOSHIBA PLC (TOSHIBA PROSEC T/V Series)

Device name		Setting range	Device No. representation
Bit device	External input (X)	X0000 to X511F	Hexadecimal
	External output (Y)	Y0000 to Y511F	
	Internal relay (R)*7	R0000 to R4095F	
	Special relay (S)*7	S0000 to S511F	
	Link register relay (Z)	Z0000 to Z999F	
	Link relay (L)	L0000 to L255F	
	Timer (Contact) (T)*1	T0 to T999	Decimal
	Counter (Contact) (C)*1	C0 to C511	
	The bit specification of the word device*2*5*7 (except external input, external output, internal relay, special relay link relay, timer and counter)	Setting range of each word device	-
Word device	External input (XW)	XW0 to XW511	Decimal
	External output (YW)	YW0 to YW511	
	Internal relay (RW)*6*8	RW0 to RW4095	
	Special relay (SW)*8	SW0 to SW511	
	Link relay (LW)	LW0 to LW255	
	Timer (Current value) (T)*1	T0 to T999	
	Counter (Current value) (C)*1	C0 to C511	
	Data register (D) *3*6*8	D0 to D8191	
	Link register (W)	W0 to W2047	
	File register (F)*4	F0 to F32767	

PROSEC T Series

*1 The writing of the timer (contact)/(current value) and counter (contact)/(current value) are executed after being read by the GOT. Therefore, do not edit it in the sequence program during this period.

*2 As bit specification of a word device is performed after the GOT reads the value, do not change the value in the sequence program during this period.

*3 When the mode switch on the CPU module is set to "P-RUN", writing to D0000 through D4095 is disabled.

*4 Extension file register is not supported.

PROSEC V Series

*5 As bit specification of a word device is performed after the GOT reads the value, do not change the value in the sequence program during this period.

*6 RW0000 and D0000 indicate the data register in the same region although they are shown in different notations.

*7 For bit data, the conversion from the address notation for the TOSHIBA PLC to that for the GOT is shown as follows.
Address notation for TOSHIBA PLC ÷ 16=Word address (Quotient)...Bit address (Remainder)

Address notation for TOSHIBA PLC	Address notation for GOT	Conversion
S8191	S511F (Decimal) (Hexadecimal)	8191÷16= 511...15
R65535	R4095F (Decimal) (Hexadecimal)	65535÷16= 4095...15

*8 For word data, the conversion from the address notation for the TOSHIBA PLC to that for the GOT is shown as follows.

Communication format		Address notation for TOSHIBA PLC	Address notation for GOT
16bit data		DW10	D10
32bit data	(Integer)	DD10 (Calculate the device No. in 32-bit unit)	D20
	(Real number)	DF10 (Calculate the device No. in 32-bit unit)	D20

■3. TOSHIBA PLC (Unified Controller nv Series)

Device name		Setting range	Device No. representation
Bit device	External input (X)	X000000 to X16383F	Decimal +Hexadecimal
	External input (X)	Y000000 to Y16383F	
	Internal relay (R)	R00000 to R8191F	
	Input variable (I)	I000000 to I16383F	
	Output variable (Q)	Q000000 to Q16383F	
	Special relay (S)	S00000 to S1023F	
Word device	External input (XW)	XW0 to XW16383	Decimal
	External output (YW)	YW0 to YW16383	
	Internal relay (RW)	RW0 to RW8191	
	Special relay (SW)	SW0 to SW1023	
	Data register (D)	D0 to D8191	Decimal
	File register (F)	F0 to F32767	
	Input variable (IW)	IW0 to IW16383	
	Output variable (QW)	QW0 to QW16383	
	User global (UG)	UG0 to UG262143	

13. CONNECTION TO TOSHIBA MACHINE PLC

13.1 Connectable Model List . . . . . 13 - 2
13.2 System Configuration . . . . . 13 - 3
13.3 Connection Diagram. . . . . 13 - 5
13.4 GOT Side Settings . . . . . 13 - 10
13.5 PLC Side Setting. . . . . 13 - 12
13.6 Device Range that Can Be Set. . . . . 13 - 13

13. CONNECTION TO TOSHIBA MACHINE PLC

13.1 Connectable Model List

The following table shows the connectable models.

Series	Model name	Clock	Communication Type	Connectable GOT	Refer to
TCmini Series	TC3-01	○	RS-232	GT27 GT25 GT23 GT21 GS	➠ 13.2.1
	TC3-02	○			
	TC6-00	○			
	TC8-00	○			
	TC5-02	×	RS-485		
	TC5-03	×			
Robot controller	TS2000	×	RS-232	GT27 GT25 GT23 GT21 GS	➠ 13.2.2
	TS2100	×			

13.2 System Configuration

13.2.1 Connecting to TC3, TC5, TC6, TC8

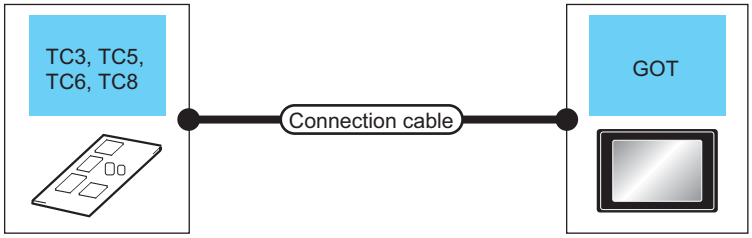

PLC		Connection cable		GOT		Number of connectable equipment
Model name	Communication Type	Cable model Connection diagram number	Max. distance	Option device	Model	
TC3, TC6, TC8	RS-232	User preparing RS232 connection diagram 1)	15m	- (Built into GOT)	GT27 GT25 GT23 GT21(05Q) GS	1 GOT for 1 PLC
				GT15-RS2-9P	GT27 GT25	
				GT10-C02H-6PT9P*1	GT21(03P 04P R4) GT21(03P 04P R2)	
		User preparing RS232 connection diagram 3)	15m	- (Built into GOT)	GT21(04R) GT21(03P 04P R2)	
TC5	RS-485	User preparing RS485 connection diagram 1)	400m	- (Built into GOT)	GT27 GT25 GT23 GT21(05Q)	
		User preparing RS485 connection diagram 2)		- (Built into GOT)	GT21(04R) GT21(03P 04P ET/R4) GT21(03P 04P R4)	
		User preparing RS485 connection diagram 3)		FA-LTBGT2R4CBL05(0.5m)*2 FA-LTBGT2R4CBL10(1m)*2 FA-LTBGT2R4CBL20(2m)*2	GT27 GT25 GT23	

*1 When a GT10-C02H-6PT9P unit of the sub version A or B is used, do not ground the case of the D-sub (9-pin) connector.

*2 Product manufactured by MITSUBISHI ELECTRIC ENGINEERING COMPANY LIMITED. For details of the product, contact MITSUBISHI ELECTRIC ENGINEERING COMPANY LIMITED.

13.2.2 Connecting to TS2000, TS2100

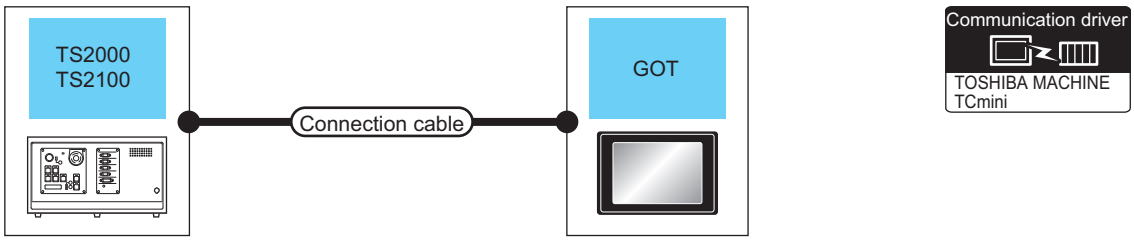

Robot controller		Connection cable		GOT		Number of connectable equipment
Model name	Communication Type	Cable model Connection diagram number	Max. distance	Option device	Model	
TS2000 TS2100 (POD port)	RS-232	User preparing RS232 connection diagram 2)	15m	- (Built into GOT)	GT27 GT25 GT23 GT21050 GS	1 GOT for 1 robot controller
				GT15-RS2-9P	GT27 GT25	
				GT10-C02H-6PT9P*1	GT2103P GT2104P R4 GT2103P GT2104P R2	
		User preparing RS232 connection diagram 4)	15m	- (Built into GOT)	GT2104R GT2103P GT2104P R2	

*1 When a GT10-C02H-6PT9P unit of the sub version A or B is used, do not ground the case of the D-sub (9-pin) connector.

13.3 Connection Diagram

The following diagram shows the connection between the GOT and the PLC.

13.3.1 RS-232 cable

■1. Connection diagram

(1) RS232 connection diagram 1)

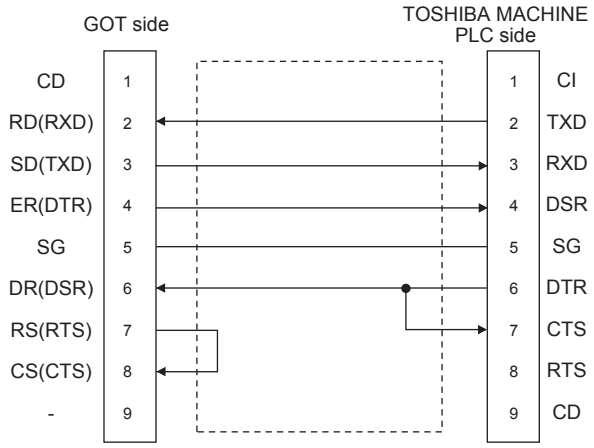

(2) RS232 connection diagram 2)

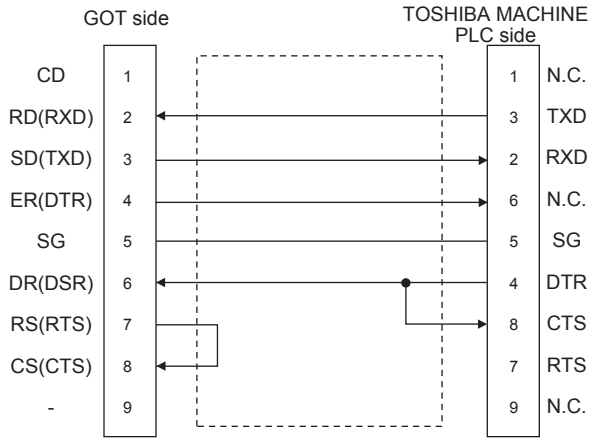

(3) RS232 connection diagram 3)

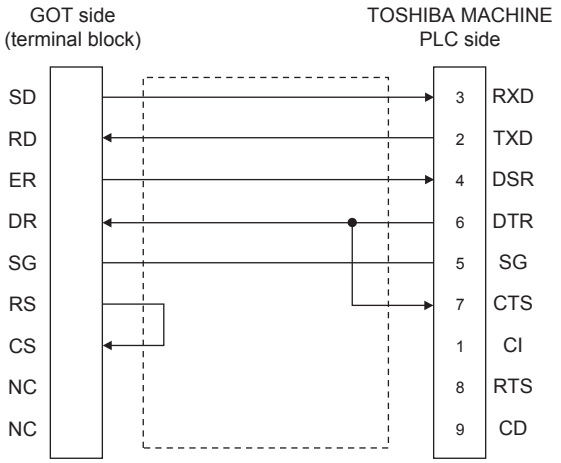

(4) RS232 connection diagram 4)

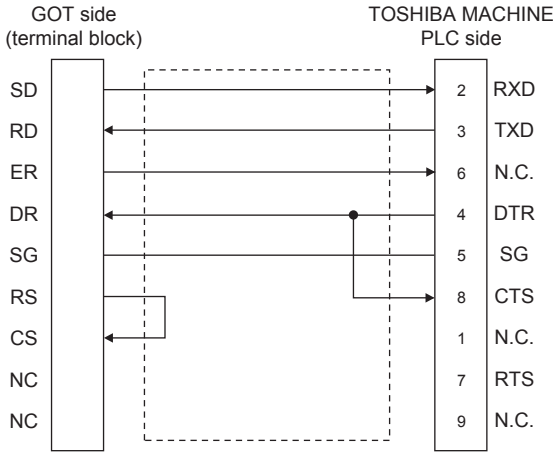

■2. Precautions when preparing a cable

(1) Cable length

The length of the RS-232 cable must be 15m or less.

(2) GOT side connector

For the GOT side connector, refer to the following.

➠ 1.4.1 GOT connector specifications

(3) TOSHIBA MACHINE PLC side connector

Use the connector compatible with the TOSHIBA MACHINE PLC side module.
For details, refer to the TOSHIBA MACHINE PLC user's manual.

13.3.2 RS-485 cable

■1. Connection diagram

(1) RS485 connection diagram 1)

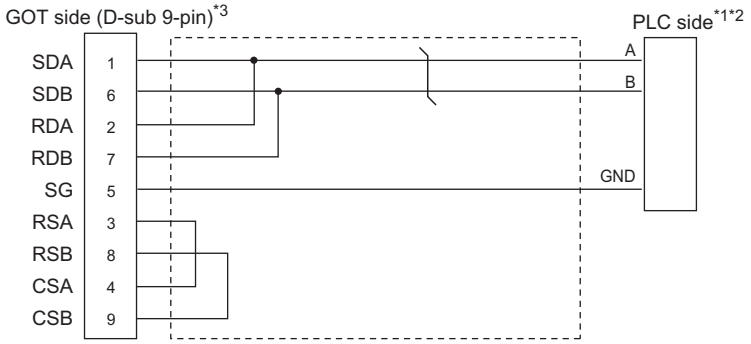

*1 Pin No. of PLC side differs depending on the model. Refer to the following table.

Signal name	Model of PLC			
	TC5-02		TC5-03	
	CN24A	CN24B	CN14	CN18
	Pin No.	Pin No.	Pin No.	Pin No.
A	1	1	3	3
B	2	2	4	4
GND	3	3	5	5

*2 For the PLC side terminating resistor, refer to the following.

➠ PLC user's Manual to be used

*3 Set the terminating resistor of GOT side which will be a terminal.
For GT27, GT25, GT23: Set the terminating resistor "Enable".
For GT21: Set the terminating resistor "110Ω".

➠ 1.4.3 Terminating resistors of GOT

(2) RS485 connection diagram 2)

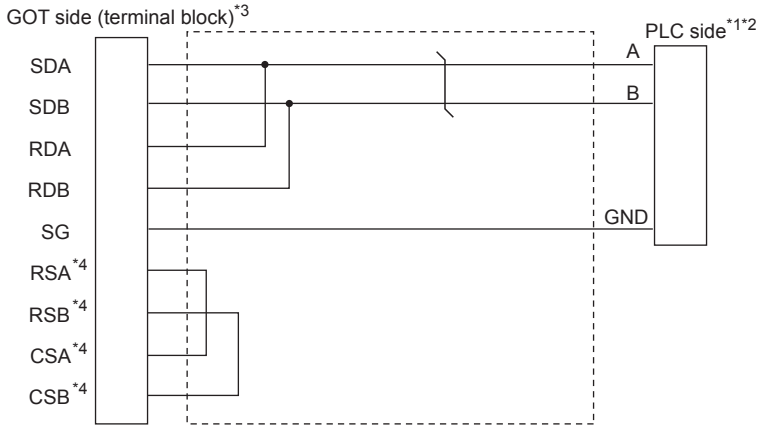

*1 Pin No. of PLC side differs depending on the model. Refer to the following table.

Signal name	Model of PLC			
	TC5-02		TC5-03	
	CN24A	CN24B	CN14	CN18
	Pin No.	Pin No.	Pin No.	Pin No.
A	1	1	3	3
B	2	2	4	4
GND	3	3	5	5

*2 For the PLC side terminating resistor, refer to the following.

➠ PLC user's Manual to be used

*3 Set the terminating resistor of GOT side, which will be a terminal, to "110Ω".

➠ 1.4.3 Terminating resistors of GOT

*4 The signals RSA, RSB, CSA, and CSB are not provided for GT 2 03P 04P ET/R4.

(3) RS485 connection diagram 3)

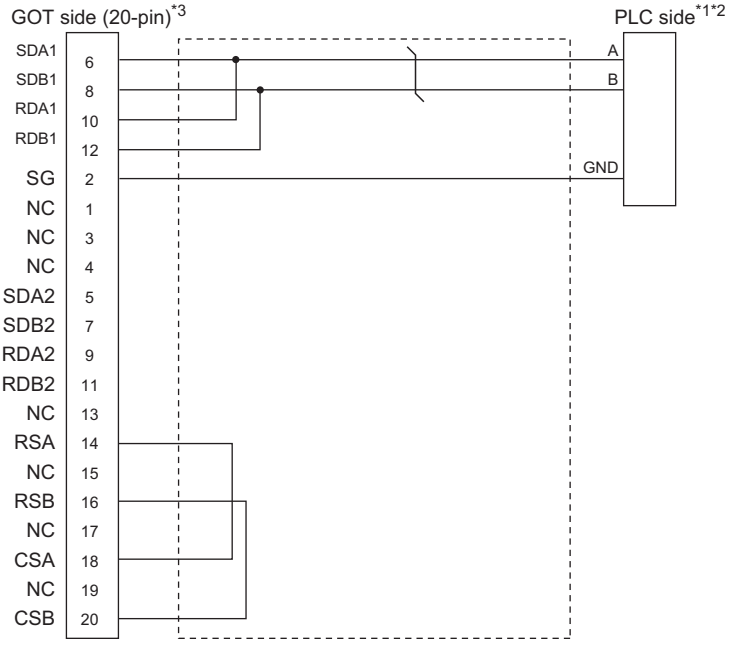

*1 Pin No. of PLC side differs depending on the model. Refer to the following table.

Signal name	Model of PLC			
	TC5-02		TC5-03	
	CN24A	CN24B	CN14	CN18
	Pin No.	Pin No.	Pin No.	Pin No.
A	1	1	3	3
B	2	2	4	4
GND	3	3	5	5

*2 For the PLC side terminating resistor, refer to the following.

➠ PLC user's Manual to be used

*3 Set the terminating resistor of GOT side, which will be a terminal, to "110Ω".

➠ 1.4.3 Terminating resistors of GOT

■2. Precautions when preparing a cable

(1) Cable length

The length of the RS-485 cable must be 400m or less.

(2) GOT side connector

For the GOT side connector, refer to the following.

➠ 1.4.1 GOT connector specifications

(3) PLC side connector

Use the connector compatible with the PLC side.
For details, refer to the PLC user's Manual to be used.

■3. Connecting terminating resistors

(1) GOT side

When connecting a PLC to the GOT, a terminating resistor must be connected to the GOT.

(a) For GT27, GT25, GT23

Set the terminating resistor using the terminating resistor setting switch.

(b) For GT21

Set the terminating resistor using the terminating resistor selector.

For the procedure to set the terminating resistor, refer to the following.

➠ 1.4.3 Terminating resistors of GOT

(2) PLC side

When connecting a PLC to the GOT, a terminating resistor must be connected to the PLC.
For details, refer to the PLC user's Manual to be used.

13.4 GOT Side Settings

13.4.1 Setting communication interface (Communication settings)

Set the channel of the equipment to be connected to the GOT.

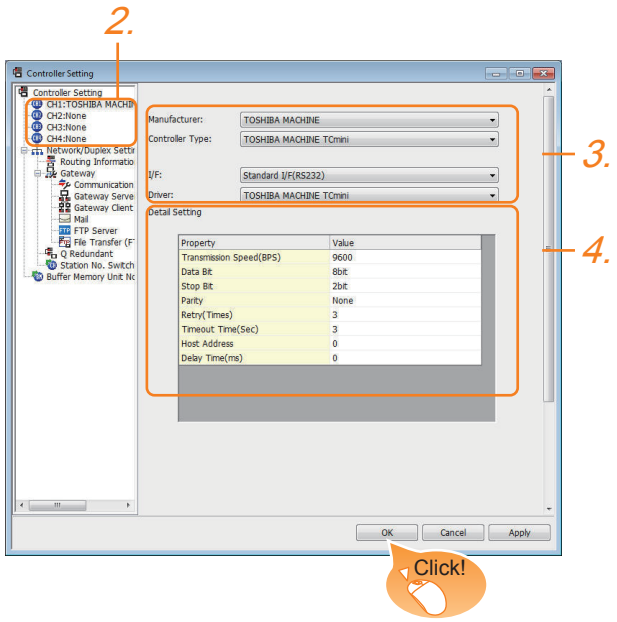

Step 1. Select [Common] → [Controller Setting] from the menu.

Step 2. The Controller Setting window is displayed. Select the channel to be used from the list menu.

Step 3. Set the following items.

- Manufacturer: TOSHIBA MACHINE
- Controller Type: TOSHIBA MACHINE TCmini
- I/F: Interface to be used
- Driver: TOSHIBA MACHINE TCmini

Step 4. The detailed setting is displayed after Manufacturer, Controller Type, I/F, and Driver are set. Make the settings according to the usage environment.

➠ 13.4.2 Communication detail settings

Click the [OK] button when settings are completed.

POINT

The settings of connecting equipment can be confirmed in [I/F Communication Setting]. For details, refer to the following.

➠ 1.1.2 I/F communication setting

13.4.2 Communication detail settings

Make the settings according to the usage environment.

Property	Value
Transmission Speed(BPS)	9600
Data Bit	8 bit
Stop Bit	2 bit
Parity	None
Retry(Times)	3
Timeout Time(Sec)	3
Host Address	0
Delay Time(ms)	0

Item	Description	Range
Transmission Speed	Set this item when change the transmission speed used for communication with the connected equipment. (Default: 9600bps)	9600bps,19200bps, 38400bps, 57600bps, 115200bps
Data Bit	Set this item when change the data length used for communication with the connected equipment. (Default: 8bit)	7bits/8bits
Stop Bit	Specify the stop bit length for communications. (Default: 2bits)	1bit/2bits
Parity	Specify whether or not to perform a parity check, and how it is performed during communication. (Default: None)	None Even Odd
Retry	Set the number of retries to be performed when a communication error occurs. (Default: 3times)	0 to 5times
Timeout Time	Set the time period for a communication to time out. (Default: 3sec)	1 to 30sec
Host Address	Specify the host address (station No. of the GOT to which the PLC is connected) in the connected network. (Default: 0)	0 to 63
Delay Time	Set this item to adjust the transmission timing of the communication request from the GOT. (Default: 0ms)	0 to 300 (ms)

POINT

(1) Delay Time
When connecting to the PLC and RS-485, set the delay time to 1ms or more.

(2) Communication interface setting by the Utility
The communication interface setting can be changed on the Utility's [Communication Settings] after writing [Communication Settings] of project data.
For details on the Utility, refer to the following manual.

➠ GOT2000 Series User's Manual (Utility)

(3) Precedence in communication settings
When settings are made by GT Designer3 or the Utility, the latest setting is effective.

POINT

TOSHIBA MACHINE PLC

For details of the TOSHIBA MACHINE PLC, refer to the following manual.

➠ TOSHIBA MACHINE PLC user's Manual

Model name		Refer to
PLC CPU	TC3, TC8	13.5.1
	TC5	13.5.2
	TC6	13.5.3
Robot controller	TS2000, TS2100	13.5.4

13.5.1 Connecting to TC3, TC8 series

No communication settings.
Communication is available using default value of the PLC.

13.5.2 Connecting to TC5 series

The setting of transmission speed is changeable.
Set the following Generic register 1(D) using engineering tool.
The communication may not work properly if the settings are made using the GOT.

Generic register	Description	Set value
D37F	Mode setting	3: Host communication connection mode
D37E	Transmission speed*1	0:9600bps 1:19200bps 2:38400bps
-	Data bit	8bits (fixed)
-	Parity bit	None (fixed)
-	Stop bit	2bits (fixed)

*1 Adjust the settings with GOT settings.
For the transmission speed setting on the GOT side, refer to the following.

➠ 13.4.1 Setting communication interface (Communication settings)

13.5.3 Connecting to TC6 series

The setting of transmission speed is changeable.
Set the following Special AUX Relay(A) using engineering tool.
The communication may not work properly if the settings are made using the GOT.

Transmission speed*1	Special AUX Relay		
	A158	A159	A15A
9600bps	OFF	OFF	OFF
19200bps	ON	OFF	OFF
38400bps	-	ON	OFF
57600bps	-	OFF	ON
115200bps	-	ON	ON

*1 The transmission speed setting must be consistent with that of the GOT side.
For the transmission speed setting on the GOT side, refer to the following.

➠ 13.4.1 Setting communication interface (Communication settings)

13.5.4 Connecting to TS2000, TS2100

No communication settings.
Communication is available using the default value of the robot controller.

13.6 Device Range that Can Be Set

The device ranges of controller that can be used for GOT are as follows.
Note that the device ranges in the following tables are the maximum values that can be set in GT Designer3.
The device specifications of controllers may differ depending on the models, even though belonging to the same series.
Please make the setting according to the specifications of the controller actually used.
When a non-existent device or a device number outside the range is set, other objects with correct device settings may not be monitored.

■1. Setting item

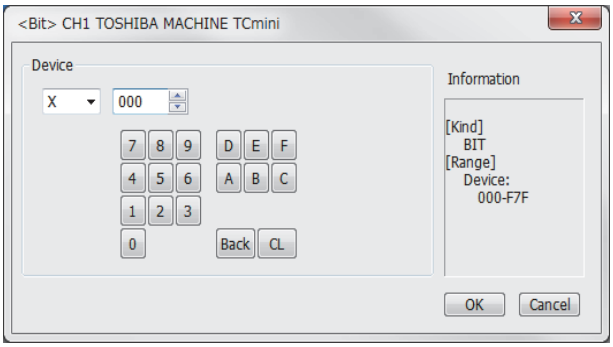

Item	Description
Device	Set the device name, device number, and bit number. The bit number can be set only when specifying the bit of word device.
Information	Displays the device type and setting range which are selected in [Device].

POINT

(1) Device settings for TOSHIBA MACHINE PLC

(a) When setting relay address or word register address as bit device
Set the device No. with the rack No. (Hex), module position (Octal), and terminal No. (Hex), in that order.

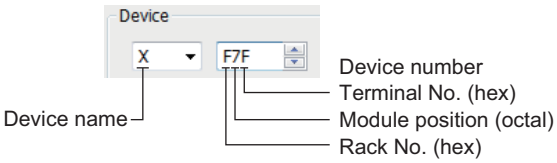

(b) When setting a relay address as a word device
Set the device No. with the rack No. (Hex) and module position (Octal), in that order.
For the device name setting, enter "w" before the bit device name.

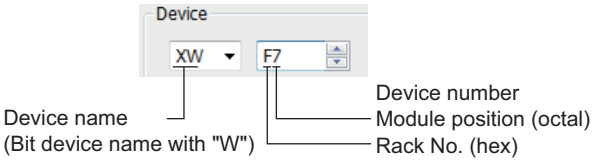

13.6.1 TOSHIBA MACHINE PLC (TOSHIBA MACHINE TCmini)

Device name		Setting range	Device No. representation
Bit device	Input relay 1 (X)	X000toXF7F	Hexadecimal + Octal + Hexadecimal
	Input relay 2 (I)	I000toIF7F	
	Output relay 1 (Y)	Y000toYF7F	
	Output relay 1 (O)	O000toOF7F	
	Internal relay (R)	R000toR77F	
	Extended internal relay 1 (GR)	GR000toGRF7F	
	Extended internal relay 2 (H)	H000toHF7F	
	Extended internal relay 3 (J)	J000toJF7F	
	Extended internal relay 4 (K)	K000toKF7F	
	Timer (Contact) (T)	T000toT77F	
	Counter (Contact) (C)	C000toC77F	
	Shift relay (S)	S000toS07F	
	Latch relay (L)	L000toL07F	
	Edge relay (E)	E000toE77F	
	Special auxiliary relay (A)	A000toA16F	
Word device	Input register 1 (XW)	XW00toXWF7	Hexadecimal + Octal
	Input register 2 (IW)	IW00toIWF7	
	Output register 1 (YW)	YW00toYWF7	
	Output register 2 (OW)	OW00toOWF7	
	Internal register (RW)	RW00toRW77	
	Extended internal register 1 (GW)	GW00toGWF7	
	Extended internal register 2 (HW)	HW00toHWF7	
	Extended internal register 3 (JW)	JW00toJWF7	
	Extended internal register 4 (KW)	KW00toKWF7	
	Timer (Contact) register (TW)	TW00toTW77	
	Counter (Contact) register (CW)	CW00toCW77	
	Shift register (SW)	SW00toSW07	
	Latch register (LW)	LW00toLW07	
	Edge register (EW)	EW00toEW77	
	Special auxiliary register (AW)	AW00toAW16	Hexadecimal + Octal + Hexadecimal
	Generic register 1 (D)	D000toDF7F	
	Generic register 2 (B)	B000toBF7F	
	Generic register 3 (U)	U000toUF7F	
	Generic register 4 (M)	M000toMF7F	
	Generic register 5 (Q)	Q000toQF7F	
	Timer/Counter current value (P)	P000toP77F	
	Timer/Counter set value (V)	V000toV77F+	

14. CONNECTION TO PANASONIC SERVO AMPLIFIER

14.1 Connectable Model List . . . . . 14 - 2
14.2 System Configuration . . . . . 14 - 3
14.3 Connection Diagram. . . . . 14 - 5
14.4 GOT Side Settings . . . . . 14 - 11
14.5 Servo Amplifier Side Setting . . . . . 14 - 13
14.6 Device Range that Can Be Set. . . . . 14 - 15
14.7 Precautions . . . . . 14 - 19

14. CONNECTION TO PANASONIC SERVO AMPLIFIER

14.1 Connectable Model List

The following table shows the connectable models.

Model name	Clock	Communication Type	Connectable GOT	Refer to
MINAS A4	×	RS-232 RS-485	GT27 GT25 GT23	➠ 14.2.1
MINAS A4F	×			
MINAS A4L	×			
MINAS A5				➠ 14.2.2

14.2 System Configuration

14.2.1 Connecting to MINAS A4, MINAS A4F, MINAS A4L series

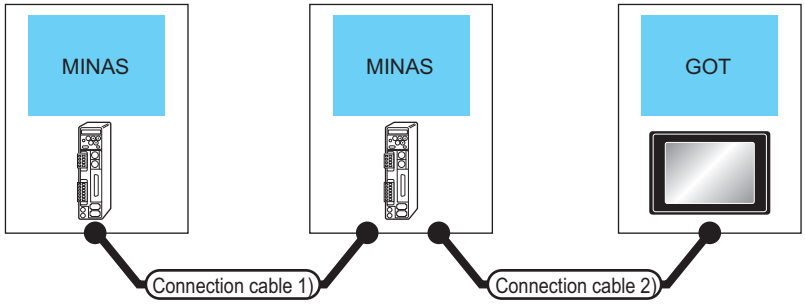

Servo amplifier		Connection cable 1)	Servo amplifier		Connection cable 2)		GOT		Max. total distance	Number of connectable equipment
Model name	Communication Type	Cable model*1	Model name	Communication Type	Cable model Connection diagram number	Max. distance	Option device	Model		
MINAS A4 MINAS A4F MINAS A4L	RS-485	DVOP1970(0.2m) DVOP1971(0.5m) DVOP1972(1m)	MINAS A4 MINAS A4F MINAS A4L	RS-232	DVOP1960*1 or User preparing RS-232 connection diagram 1)	2m	- (Built into GOT)	GT27 GT25 GT23	17m	16 servo amplifiers for 1 GOT
							GT15-RS2-9P	GT27 GT25		
	RS-485	DVOP1970(0.2m) DVOP1971(0.5m) DVOP1972(1m)	MINAS A4 MINAS A4F MINAS A4L	RS-485	User preparing RS-485 connection diagram 2)	1m	GT15-RS4-TE	GT27 GT25	16m	15 servo amplifiers for 1 GOT
					User preparing RS-422 connection diagram 3)	1m	FA-LTBGT2R4CBL05 (0.5m) FA-LTBGT2R4CBL10 (1m) FA-LTBGT2R4CBL20 (2m)	GT27 GT25 GT23		
					User preparing RS-422 connection diagram 4)	1m	- (Built into GOT)	GT27 GT25 GT23		
							GT15-RS4-9S	GT27 GT25		

*1 The link unit is a product manufactured by PANASONIC Corporation.
For details of this product, contact PANASONIC Corporation.

14.2.2 Connecting to MINAS A5 series

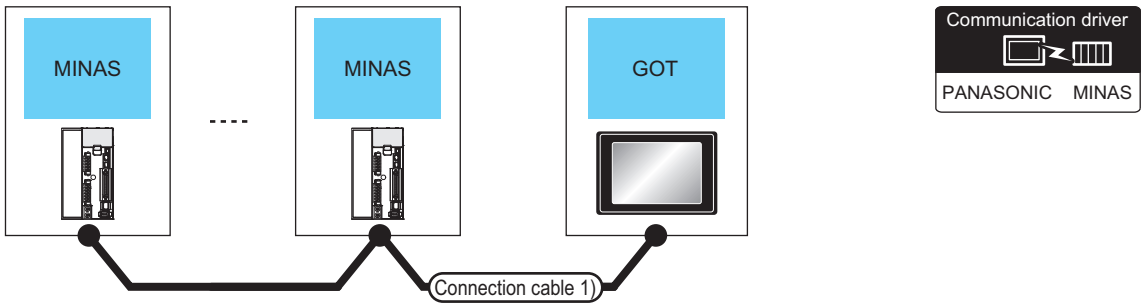

Servo amplifier		Connection cable 1)		GOT		Max. total distance	Number of connectable equipment
Model name	Communication Type	Cable model Connection diagram number	Max. distance	Option device	Model		
MINAS A5	• Between MINAS and GOT:RS-232 • Between MINAS and MINAS:RS-485	User preparing RS-232/485 connection diagram 1)	*2	- (Built into GOT)	GT27 GT25 GT23	33m	32 servo amplifiers for 1 GOT
				GT15-RS2-9P	GT27 GT25		
	RS-485	User preparing RS-485 connection diagram 6)	*3	GT15-RS4-TE	GT27 GT25	32m	31 servo amplifiers for 1 GOT
		User preparing RS485 connection diagram 7)	*3	FA-LTBGT2R4CBL05 (0.5m) FA-LTBGT2R4CBL10 (1m) FA-LTBGT2R4CBL20 (2m)	GT27 GT25 GT23		
		User preparing RS-485 connection diagram 8)	*3	- (Built into GOT)	GT27 GT25 GT23		
				GT15-RS4-9S	GT27 GT25		

*1 Product manufactured by Panasonic Corporation. For details of this product, contact Panasonic Corporation.

*2 The following shows the maximum distance.
- Between MINAS and GOT: 2m
- Between MINAS and MINAS: 1m

*3 The following shows the maximum distance.
- Between MINAS and GOT: 1m
- Between MINAS and MINAS: 1m

14.3 Connection Diagram

The following diagram shows the connection between the GOT and the Servo amplifier.

14.3.1 RS-232 cable

■1. Connection diagram

(1) RS-232 connection diagram 1)

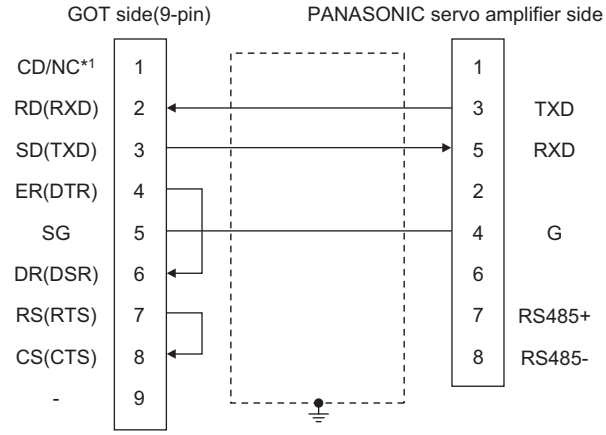

*1 GT27: CD, GT23:NC

■2. Precautions when preparing a cable

(1) Cable length

The length of the RS-232 cable must be 2m or less.

(2) GOT side connector

For the GOT side connector, refer to the following.

➠ 1.4.1 GOT connector specifications

(3) PANASONIC servo amplifier side connector

Use the connector compatible with the PANASONIC servo amplifier.
For details, refer to the user's manual of the PANASONIC servo amplifier.

14.3.2 RS-485 cable

■1. Connection diagram

(1) RS-485 connection diagram 1)

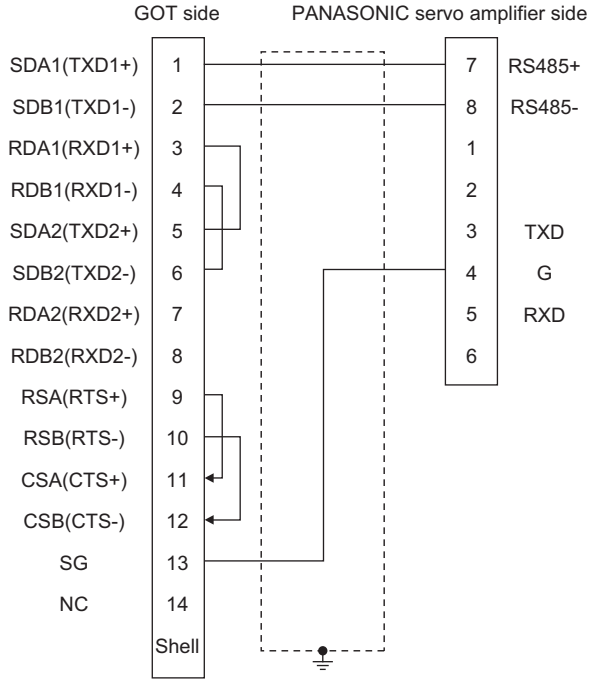

(2) RS-485 connection diagram 2)

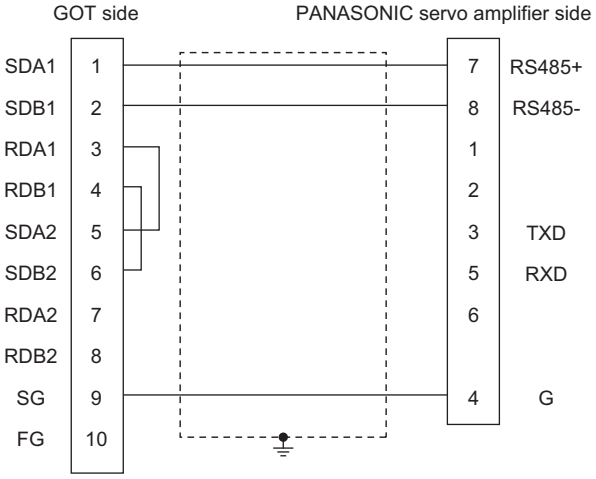

(3) RS-422 connection diagram 3)

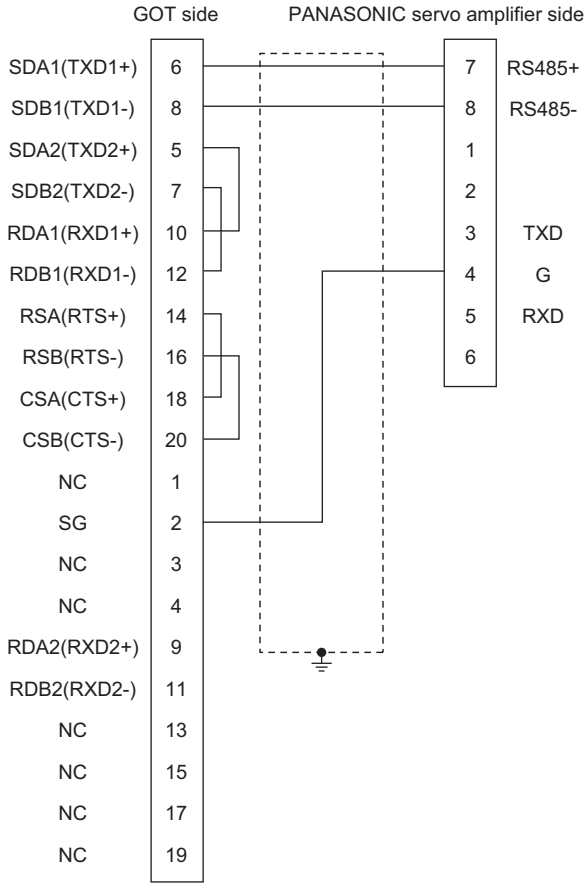

(4) RS-422 connection diagram 4)

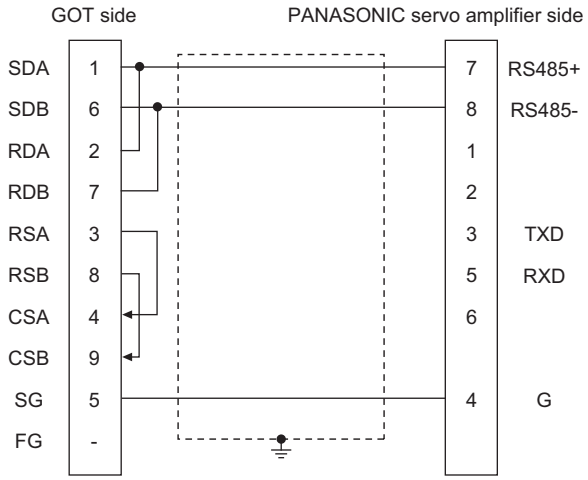

(5) RS-485 connection diagram 5) (For GT16)

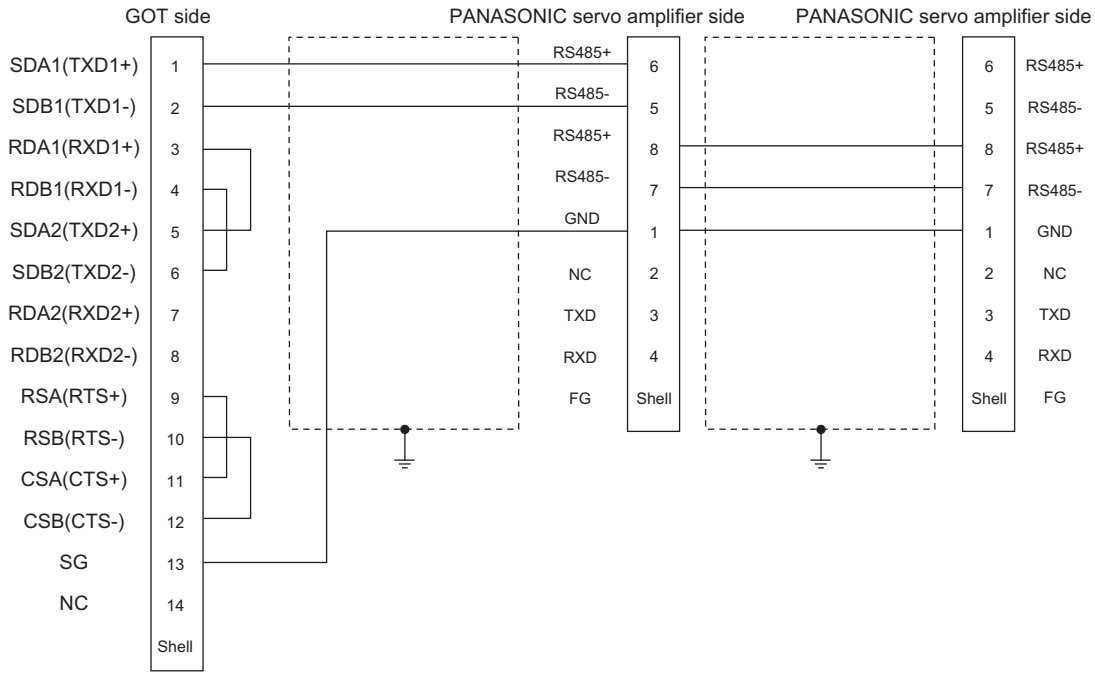

(6) RS-485 connection diagram 6)

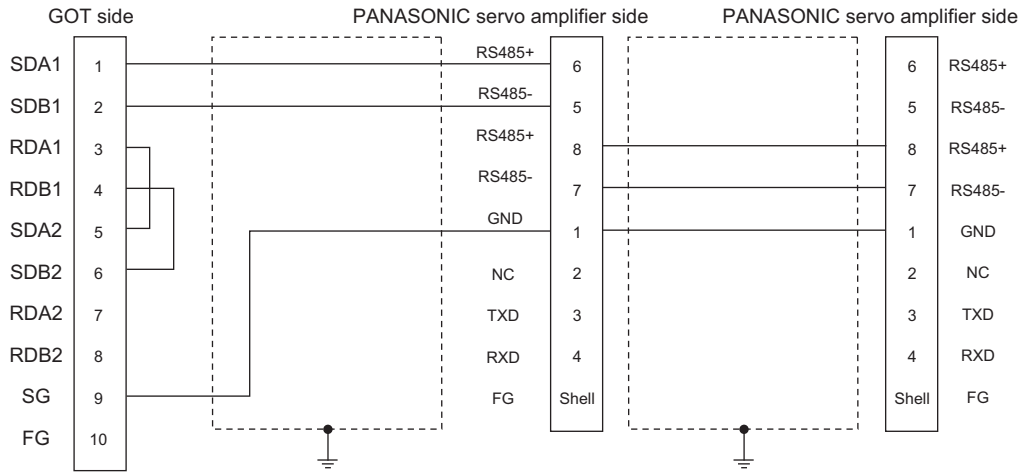

(7) RS-485 connection diagram 7) (For GT16)

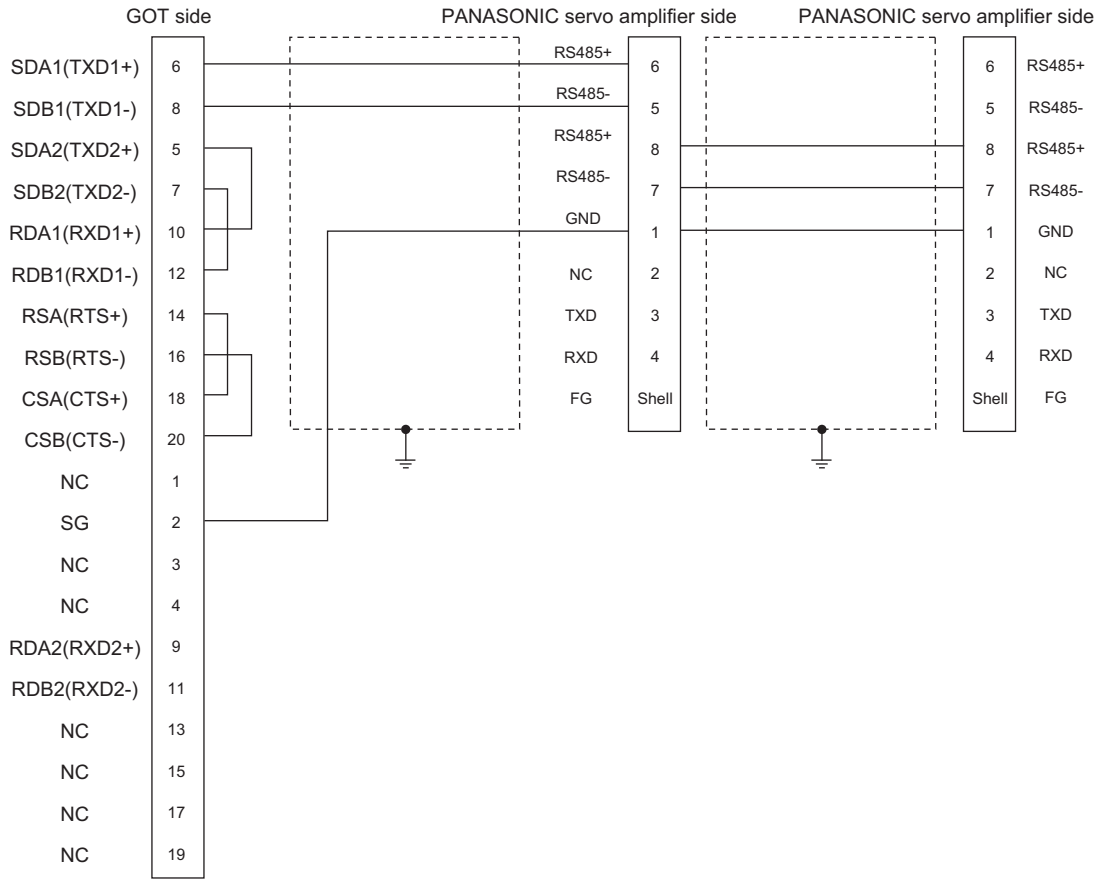

(8) RS-485 connection diagram 8)

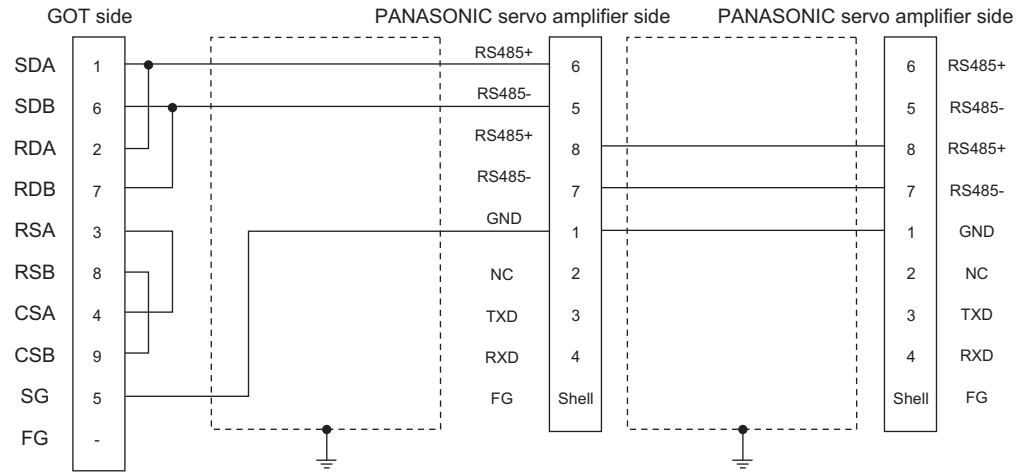

■2. Precautions when preparing a cable

(1) Cable length

The length of the RS-485 cable must be 1m or less.

(2) GOT side connector

For the GOT side connector, refer to the following.

➠ 1.4.1 GOT connector specifications

(3) PANASONIC servo amplifier side connector

Use the connector compatible with the PANASONIC servo amplifier.
For details, refer to the user's manual of the PANASONIC servo amplifier.

■3. Connecting terminating resistors

(1) GOT side

Set the terminating resistor setting switch of the GOT main unit to "Disable".
For details of terminating resistor settings, refer to the following.

➠ 1.4.3 Terminating resistors of GOT

14.3.3 RS-232/RS-485 cable

■1. Connection diagram

(1) RS-232/485 connection diagram 1)

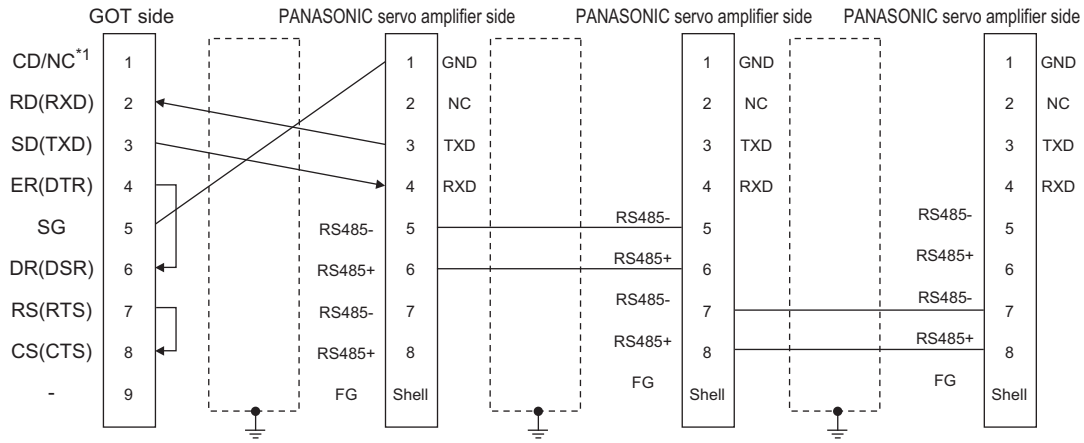

*1 GT27:CD, GT23:NC

■2. Precautions when preparing a cable

(1) Cable length

- The length of the cable between GOT and MINAS must be 2m or less.
- The length of the cable between MINAS and MINAS must be 1m or less.

(2) GOT side connector

For the GOT side connector, refer to the following.

➠ 1.4.1 GOT connector specifications

(3) PANASONIC servo amplifier side connector

Use the connector compatible with the PANASONIC servo amplifier.
For details, refer to the user's manual of the PANASONIC servo amplifier.

14.4.1 Setting communication interface (Communication settings)

Set the channel of the equipment to be connected to the GOT.

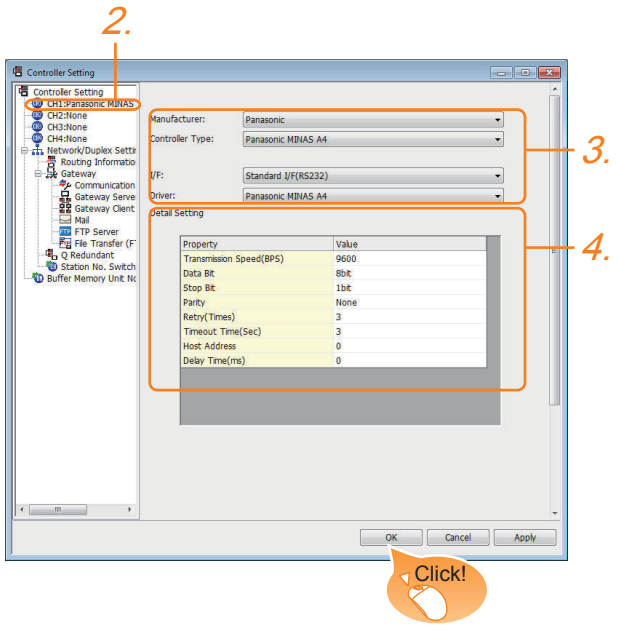

Step 1. Select [Common] → [Controller Setting] from the menu.

Step 2. The Controller Setting window is displayed. Select the channel to be used from the list menu.

Step 3. Set the following items.
- Manufacturer: PANASONIC
- Controller Type: Set the option according to the Controller Type to be connected.
  - PANASONIC MINAS-A4 series
  - PANASONIC MINAS-A5 series
- I/F: Interface to be used
- Driver: Depends on the model to be used.
  - PANASONIC MINAS-A4
  - PANASONIC MINAS-A5

Step 4. The detailed setting is displayed after Manufacturer, Controller Type, I/F, and Driver are set. Make the settings according to the usage environment.

➠ 14.4.2 Communication detail settings

Click the [OK] button when settings are completed.

POINT

The settings of connecting equipment can be confirmed in [I/F Communication Setting]. For details, refer to the following.

➠ 1.1.2 I/F communication setting

14.4.2 Communication detail settings

Make the settings according to the usage environment.

Property	Value
Transmission Speed(BPS)	9600
Data Bit	8 bit
Stop Bit	1 bit
Parity	None
Retry(Times)	3
Timeout Time(Sec)	3
Host Address	0
Delay Time(ms)	0

Item	Description	Range
Transmission Speed	Set this item when change the transmission speed used for communication with the connected equipment. (Default: 9600bps)	9600bps, 19200bps, 38400bps, 57600bps, 115200bps
Data Bit	Set this item when change the data length used for communication with the connected equipment. (Default: 8bits)	7bit/8bit
Stop Bit	Specify the stop bit length for communications. (Default: 1bit)	1bit/2bit
Parity	Specify whether or not to perform a parity check, and how it is performed during communication. (Default: None)	None Even Odd
Retry	Set the number of retries to be performed when a communication error occurs. (Default:3times)	0 to 5times
Timeout Time*1	Set the time period for a communication to time out. (Default: 3sec)	1 to 30sec
Host Address	Specify the station No. of the servo amplifier to connect the GOT. (Default: 0)	0 to 31
Delay Time	Set this item to adjust the transmission timing of the communication request from the GOT. (Default: 0ms)	0 to 300ms

POINT

(1) Communication interface setting by the Utility
The communication interface setting can be changed on the Utility's [Communication Settings] after writing [Communication Settings] of project data.
For details on the Utility, refer to the following manual.

➠ GOT2000 Series User's Manual (Utility)

(2) Precedence in communication settings
When settings are made by GT Designer3 or the Utility, the latest setting is effective.

POINT

PANASONIC Servo Amplifier

For details of the PANASONIC Servo Amplifier, refer to the following manual.

➡ PANASONIC Servo Amplifier user's Manual

14.5.1 Connecting to MINAS A4/A4F/A4L

■1. MINAS A4/A4F/A4L communication settings

Set them from the main unit front panel of MINAS A4/A4F/A4L or using the setup support software.

Pr No.	Set value
Address of axis (Parameter No.00)	0 to 15
Baud rate setup of RS232*1 (Parameter No.0C)	2:9600bps 3:19200bps 4:38400bps 5:57600bps
Baud rate setup of RS485*1 (Parameter No.0D)	2:9600bps 3:19200bps 4:38400bps 5:57600bps

*1 Only transmission speeds available on the GOT side are shown. Adjust the settings with GOT settings.

POINT

Axis name setting

- The axis name is determined according to the rotary switch ID set value when the power supply to the servo amplifier is turned on. This value will be the station number (axis number) during communication.
- The axis name setting can be changed only with the rotary switch ID.

14.5.2 Connecting to MINAS A5

■1. MINAS A5 communication settings

Set them from the main unit front panel of MINAS A5 or using the setup support software.

Pr No.	Set value
Address of axis (Parameter No.00)	0 to 31
Baud rate setup of RS232*1 (Parameter No.5.29)	2:9600bps 3:19200bps 4:38400bps 5:57600bps
Baud rate setup of RS485*1 (Parameter No.5.30)	2:9600bps 3:19200bps 4:38400bps 5:57600bps

*1 Only transmission speeds available on the GOT side are shown. Adjust the settings with GOT settings.

14.5.3 Station number setting

Set each station number so that no station number overlaps.
The station number can be set without regard to the cable connection order. There is no problem even if station numbers are not consecutive.

- When connecting the GOT and servo amplifier with RS-232
  Set the station number (axis number) of the servo amplifier connected to the GOT to 0. Set the station numbers (axis numbers) of other servo amplifiers connected to the GOT to other than 0.
- When connecting the GOT and servo amplifier with RS-485
  The GOT will be the station number (axis number) 0. Set the station numbers (axis numbers) of other connected servo amplifiers to other than 0.
  Example of RS-232 connection between GOT-servo amplifier

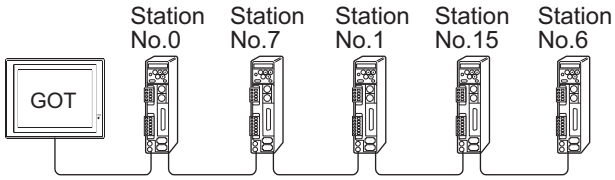

Examples of station number setting

■1. Direct specification

When setting the device, specify the station number of the servo amplifier of which data is to be changed.

Model name	Specification range
MINAS A4, MINAS A4F, MINAS A4L	0 to 15
MINAS A5	0 to 31

■2. Indirect specification

When setting the device, indirectly specify the station number of the inverter of which data is to be changed using the 16-bit GOT internal data register (GD10 to GD25).
When specifying the station No. from 100 to 115 on drawing software, the value of GD10 to GD25 compatible to the station No. specification will be the station No. of the servo amplifier.

Specification Station No.	Compatible device	Setting range
100	GD10	• MINAS A4, MINAS A4F, MINAS A4L 0 to 15 • MINAS A5 0 to 31 For the setting other than the above, a communication timeout error will occur.
101	GD11	
102	GD12	
103	GD13	
104	GD14	
105	GD15	
106	GD16	
107	GD17	
108	GD18	
109	GD19	
110	GD20	
111	GD21	
112	GD22	
113	GD23	
114	GD24	
115	GD25	

14.6 Device Range that Can Be Set

The device ranges of controller that can be used for GOT are as follows.
Note that the device ranges in the following tables are the maximum values that can be set in GT Designer3.
The device specifications of controllers may differ depending on the models, even though belonging to the same series.
Please make the setting according to the specifications of the controller actually used.
When a non-existent device or a device number outside the range is set, other objects with correct device settings may not be monitored.

■1. Setting item

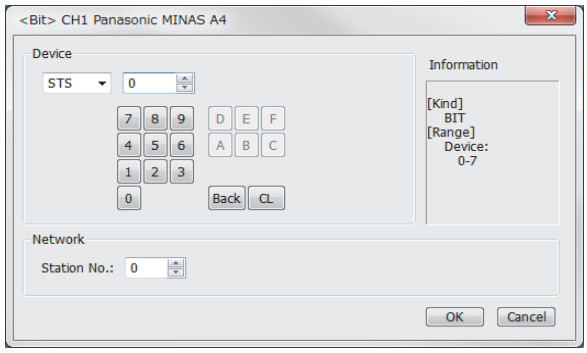

Item	Description	
Device	Set the device name, device number, and bit number. The bit number can be set only when specifying the bit of word device.	
Information	Displays the device type and setting range which are selected in [Device].	
Network	Set the monitor target of the set device.	
	Station No.	Set this item when monitoring the Servo amplifier of the specified station No.

14.6.1 PANASONIC servo amplifier (PANASONIC MINAS-A4 Series)

Device name[*1]		Setting range	Device No. representation
Bit device	Status (STS)[*2]	STS0 to STS7	Decimal
	Input signal (INP)[*2]	INP0 to INP31	
	Output signal (OTP)[*2]	OTP0 to OTP47	
	Absolute encoder (Status)(AEST)[*2]	AEST0 to AEST15	
	Writing of parameter to EEPROM (EPRW)[*3]	EPRW0	
	Clear of user alarm history (in EEPROM as well) (ALHC)[*3]	ALHC0	
	Alarm clear (ALMC)[*3]	ALMC0	
	Absolute clear (ABSC)[*3]	ABSC0	
Word device	Status (Control modes) (STCM)[*2]	STCM0	Decimal
	Present speed (SPD)[*2]	SPD0	
	Present torque output (TRQ)[*2]	TRQ0	
	Absolute encoder (Encoder ID)(AEID)[*2]	AEID0	
	Absolute encoder (Multi-turn data)(AEMD)[*2]	AEMD0	
	Parameter (PRM)	PRM0000 to PRM007F	Hexadecimal
	Present alarm data (ALM)[*2]	ALM0	Decimal
	user alarm history (ALHI)[*2]	ALHI1 to ALHI14	
	User parameter (MIN. value) (PRMN)[*2]	PRMN0000 to PRMN007F	Hexadecimal
	User parameter (MAX. value) (PRMX)[*2]	PRMX0000 to PRMX007F	
	User parameter (Property)(PRPR)[*2]	PRPR0000 to PRPR007F	
Double word device	Feedback pulse counter (FBPC)[*2]	FBPC0	Decimal
	Present deviation counter (DVC)[*2]	DVC0	
	Absolute encoder (Single turn data)(AESD)[*2]	AESD0	
	External scale deviation and sum of pulses (ESA)[*2]	ESA0 to ESA1	

*1 The GOT cannot read or write data from/to consecutive devices.
*2 Only reading is possible.
*3 Only writing is possible.

14.6.2 PANASONIC servo amplifier (PANASONIC MINAS-A5 Series)

Device name[*1]		Setting range	Device No. representation
Bit device	Status (STS)[*2]	STS0 to STS7	Decimal
	Input signal (INP)[*2]	INP0 to INP31	
	Output signal (OTP)[*2]	OTP0 to OTP47	
	Absolute encoder (Status)(AEST)[*2]	AEST0 to AEST15	
	Writing of parameter to EEPROM (EPRW)[*3]	EPRW0	
	Clear of user alarm history (in EEPROM as well) (ALHC)[*3]	ALHC0	
	Alarm clear (ALMC)[*3]	ALMC0	
	Absolute clear (ABSC)[*3]	ABSC0	
Word device	Status (Control modes) (STCM)[*2]	STCM0	Decimal
	Present speed (SPD)[*2]	SPD0	
	Present torque output (TRQ)[*2]	TRQ0	
	Absolute encoder (Encoder ID)(AEID)[*2]	AEID0	
	Absolute encoder (Multi-turn data)(AEMD)[*2]	AEMD0	
	Parameter (Class 0)(PRM0)	PRM00 to PRM017	
	Parameter (Class 1)(PRM1)	PRM10 to PRM127	
	Parameter (Class 2)(PRM2)	PRM20 to PRM223	
	Parameter (Class 3)(PRM3)	PRM30 to PRM329	
	Parameter (Class 4)(PRM4)	PRM40 to PRM442	
	Parameter (Class 5)(PRM5)	PRM50 to PRM535	
	Parameter (Class 6)(PRM6)	PRM60 to PRM639	
	Present alarm data (ALM)[*2]	ALM0	
	Present alarm data (Sub) (ALMS)[*2]	ALMS0	
	user alarm history (ALHI)[*2]	ALHI1 to ALHI14	
	user alarm history (Sub)(ALHI)[*2]	ALHS1 to ALHS14	
	User parameter (Class 0, MIN. value)(PRMN0)[*2]	PRMN00 to PRMN017	
	User parameter (Class 1, MIN. value)(PRMN1)[*2]	PRMN10 to PRMN127	
	User parameter (Class 2, MIN. value)(PRMN2)[*2]	PRMN20 to PRMN223	
	User parameter (Class 3, MIN. value)(PRMN3)[*2]	PRMN30 to PRMN329	
	User parameter (Class 4, MIN. value)(PRMN4)[*2]	PRMN40 to PRMN442	
	User parameter (Class 5, MIN. value)(PRMN5)[*2]	PRMN50 to PRMN535	
	User parameter (Class 6, MIN. value)(PRMN6)[*2]	PRMN60 to PRMN639	

Device name[*1]		Setting range	Device No. representation
Word device	User parameter (Class 0, MAX. value)(PRMX0)[*2]	PRMX00 to PRMX017	Decimal
	User parameter (Class 1, MAX. value)(PRMX1)[*2]	PRMX10 to PRMX127	
	User parameter (Class 2, MAX. value)(PRMX2)[*2]	PRMX20 to PRMX223	
	User parameter (Class 3, MAX. value)(PRMX3)[*2]	PRMX30 to PRMX329	
	User parameter (Class 4, MAX. value)(PRMX4)[*2]	PRMX40 to PRMX442	
	User parameter (Class 5, MAX. value)(PRMX5)[*2]	PRMX50 to PRMX535	
	User parameter (Class 6, MAX. value)(PRMX6)[*2]	PRMX60 to PRMX639	
	User parameter (Class 0, Property)(PRPR0)[*3]	PRPR00 to PRPR017	
	User parameter (Class 1, Property)(PRPR1)[*3]	PRPR10 to PRPR127	
	User parameter (Class 2, Property)(PRPR2)[*3]	PRPR20 to PRPR223	
	User parameter (Class 3, Property)(PRPR3)[*3]	PRPR30 to PRPR329	
	User parameter (Class 4, Property)(PRPR4)[*3]	PRPR40 to PRPR442	
	User parameter (Class 5, Property)(PRPR5)[*3]	PRPR50 to PRPR535	
	User parameter (Class 6, Property)(PRPR6)[*3]	PRPR60 to PRPR639	
	Feedback pulse counter (FBPC)[*2]	FBPC0	
	Present deviation counter (DVC)[*2]	DVC0	
	Absolute encoder (Single turn data)(AESD)[*2]	AESD0	
	External scale deviation and sum of pulses (ESA)[*2]	ESA0 to ESA1	

*1 The GOT cannot read or write data from/to consecutive devices.
*2 Only reading is possible.
*3 Only writing is possible.

14.7 Precautions

■1. Station number setting in the servo system

Configure the servo system so that there is a servo amplifier with a station number set with a host address.
For details of host address setting, refer to the following manual.

➠ 14.4.2 Communication detail settings

■2. Monitor speed

When monitoring multiple station devices placed on the same GOT screen, the monitor speed is slow. Even when monitoring a single station, the monitor speed is slow if the device points is large.

■3. Mixing of MINAS A4 series and MINAS A5 series

MINAS A4 series and MINAS A5 series cannot be mixed. The multiple MINAS A4 series can be used together.

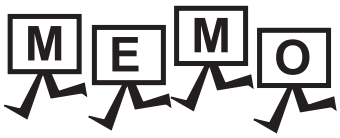
MEMO

15. CONNECTION TO PANASONIC INDUSTRIAL DEVICES SUNX PLC

15.1 Connectable Model List . . . . . 15 - 2
15.2 System Configuration . . . . . 15 - 3
15.3 Connection Diagram. . . . . 15 - 26
15.4 GOT Side Settings . . . . . 15 - 37
15.5 PLC Side Setting. . . . . 15 - 40
15.6 Device Range that Can Be Set. . . . . 15 - 42

15. CONNECTION TO PANASONIC INDUSTRIAL DEVICES SUNX PLC

15.1 Connectable Model List

The following table shows the connectable models.

Model name	Clock	Communication Type	Connectable GOT	Refer to
FP0-C16CT	×	RS-232	GT27 GT25 GT23 GT21 GS	➠ 15.2.1
FP0-C32CT				
FP0R	○			
FP1-C24C	○	RS-232	GT27 GT25 GT23 GT21 GS	➠ 15.2.2
FP1-C40C				
FP2	○*1	RS-232	GT27 GT25 GT23 GT21 GS	➠ 15.2.3
FP2SH	○			
FP3	○*2	RS-232	GT27 GT25 GT23 GT21 GS	➠ 15.2.4
FP5	○			
FP10(S)	○	RS-232	GT27 GT25 GT23 GT21 GS	➠ 15.2.5
FP10SH	○	RS-232	GT27 GT25 GT23 GT21 GS	➠ 15.2.6
FP-M(C20TC)	○	RS-232	GT27 GT25 GT23 GT21 GS	➠ 15.2.7
FP-M(C32TC)	○			
FP-∑	○	RS-232	GT27 GT25 GT23 GT21 GS	➠ 15.2.8
FP-X	○	RS-232 RS-422	GT27 GT25 GT23 GT21 GS	➠ 15.2.9
FP-7	○*3	RS-232 RS-422 RS-485	GT27 GT25 GT23 GT21	➠ 15.2.9
		RS-232 RS-422	GS	

*1 Any of the extension memory unit FP2-EM1, FP2-EM2 or FP2-EM3 is required.
*2 The clock function is available for the AFP3210C-F, AFP3211C-F, AFP3212C-F and AFP3220C-F.
*3 The GOT can only read the clock data.In the clock setting, though the adjust is available, the broadcast is not available.

15.2 System Configuration

15.2.1 Connecting to FP0-C16CT, FP0-C32CT, or FP0R

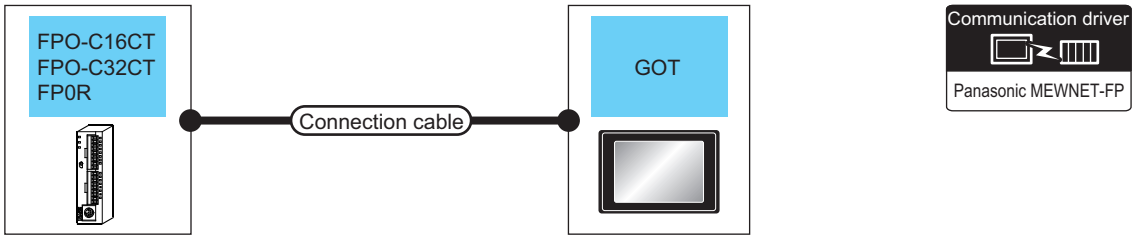

PLC		Connection cable	Max. distance	GOT		Number of connectable equipment
Model name	Communication Type	Cable model Connection diagram number		Option device	Model	
FP0-C16CT FP0-C32CT FP0R (Tool port)	RS-232	AFC8503(3m)*1	3m	- (Built into GOT)	GT27 GT25 GT23 GT21 GS	1 GOT for 1 PLC
				GT15-RS2-9P	GT27 GT25	
				GT10-C02H-6PT9P*2	GT21 GT21	
		AFC8503(3m)*1 + User preparing RS-232 connection diagram 9)	3.5m	- (Built into GOT)	GT21 GT21	
FP0-C16CT FP0-C32CT FP0R (RS232C port)	RS-232	GT09-C30R20904-3C(3m) or User preparing RS-232 connection diagram 4)	15m	- (Built into GOT)	GT27 GT25 GT23 GT21 GS	
				GT15-RS2-9P	GT27 GT25	
				GT10-C02H-6PT9P*2	GT21 GT21	
		User preparing RS-232 connection diagram 12)	15m	- (Built into GOT)	GT21 GT21	

*1 Product manufactured by Panasonic Industrial Devices SUNX Co., Ltd. For details of this product, contact Panasonic Industrial Devices SUNX Co., Ltd.

*2 When a GT10-C02H-6PT9P unit of the sub version A or B is used, do not ground the case of the D-sub (9-pin) connector.

15.2.2 Connecting to FP1-C24C or FP1-C40C

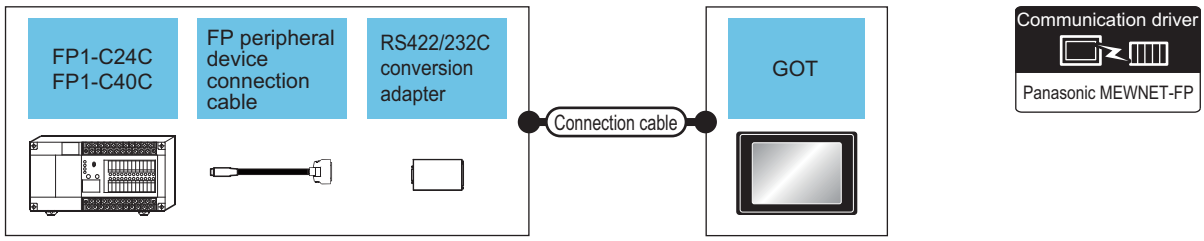

PLC				Connection cable	Max. distance	GOT		Number of connectable equipment
Model name	Communication Type	FP peripheral device connection cable*1 Cable model Connection diagram number	RS422/232 conversion adapter*1	Cable model Connection diagram number		Option device	Model	
FP1-C24C FP1-C40C (Tool port)	RS-232	AFP15205 (0.5m)	AFP8550	GT09-C30R20901-25P(3m) or User preparing RS-232 connection diagram 1)	15.5m	- (Built into GOT)	GT27 GT25 GT23 GT21(05Q) GS	1 GOT for 1 PLC
						GT15-RS2-9P	GT27 GT25	
						GT10-C02H-6PT9P*2	GT21(03P 04P R4) GT21(03P 04P R2)	
				User preparing RS-232 connection diagram 8)	15.5m	- (Built into GOT)	GT21(04R) GT21(03P 04P R2)	
FP1-C24C FP1-C40C (RS232C port)	RS-232	-	-	GT09-C30R20903-9P(3m) or User preparing RS-232 connection diagram 3)	15m	- (Built into GOT)	GT27 GT25 GT23 GT21(05Q) GS	
						GT15-RS2-9P	GT27 GT25	
						GT10-C02H-6PT9P*2	GT21(03P 04P R4) GT21(03P 04P R2)	
				User preparing RS-232 connection diagram 13)	15m	- (Built into GOT)	GT21(04R) GT21(03P 04P R2)	

*1 Product manufactured by Panasonic Industrial Devices SUNX Co., Ltd. For details of this product, contact Panasonic Industrial Devices SUNX Co., Ltd.

*2 When a GT10-C02H-6PT9P unit of the sub version A or B is used, do not ground the case of the D-sub (9-pin) connector.

15.2.3 Connecting to FP2 or FP2SH

■1. When connecting to tool port or RS232C port

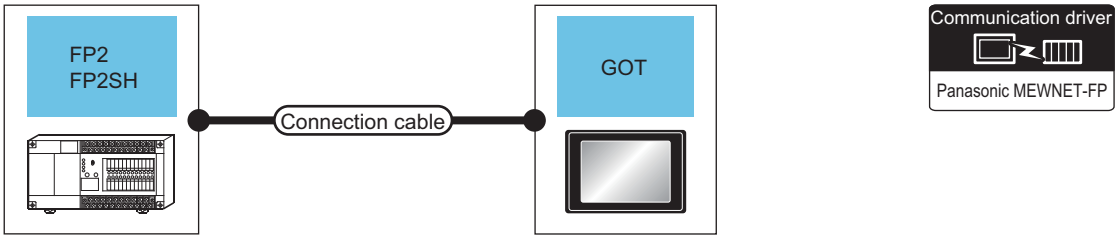

PLC		Connection cable	Max. distance	GOT		Number of connectable equipment
Model name	Communication Type	Cable model Connection diagram number		Option device	Model	
FP2 FP2SH (Tool port)	RS-232	AFC8503(3m)*1	3m	- (Built into GOT)	GT27 GT25 GT23 GT21*05Q GS	1 GOT for 1 PLC
				GT15-RS2-9P	GT27 GT25	
				GT10-C02H-6PT9P*2	GT03P GT04P R4 GT03P GT04P R2	
		AFC8503(3m)*1 + User preparing RS-232 connection diagram 9)	3.5m	- (Built into GOT)	GT04R GT03P GT04P R2	
FP2 FP2SH (RS232C port)	RS-232	AFB85853(3m)*1 GT09-C30R20902-9P(3m) or User preparing RS-232 connection diagram 2)	15m	- (Built into GOT)	GT27 GT25 GT23 GT21*05Q GS	
				GT15-RS2-9P	GT27 GT25	
				GT10-C02H-6PT9P*2	GT03P GT04P R4 GT03P GT04P R2	
		AFB85853(3m)*1 GT09-C30R20902-9P(3m) or User preparing RS-232 connection diagram 2) + User preparing RS-232 connection diagram 11)	15m	- (Built into GOT)	GT04R GT03P GT04P R2	
		User preparing RS-232 connection diagram 10)	15m	- (Built into GOT)	GT04R GT03P GT04P R2	

*1 Product manufactured by Panasonic Industrial Devices SUNX Co., Ltd. For details of this product, contact Panasonic Industrial Devices SUNX Co., Ltd.

*2 When a GT10-C02H-6PT9P unit of the sub version A or B is used, do not ground the case of the D-sub (9-pin) connector.

■2. When connecting to computer communication unit

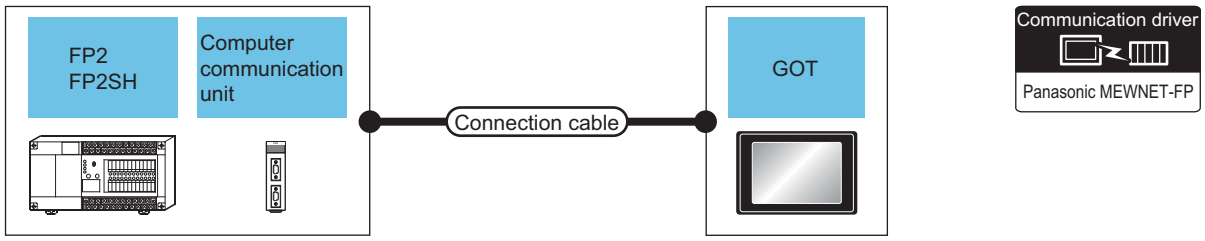

PLC			Connection cable	Max. distance	GOT		Number of connectable equipment
Model name	Computer communication unit*1	Communication Type	Cable model Connection diagram number		Option device	Model	
FP2 FP2SH	AFP2462	RS-232	AFB85853(3m)*1 GT09-C30R20902-9P(3m) or User preparing RS-232 connection diagram 2)	15m	- (Built into GOT)	GT27 GT25 GT23 GT21 GS	1 GOT for 1 computer communication unit
					GT15-RS2-9P	GT27 GT25	
					GT10-C02H-6PT9P*2	GT21 GT21	
			User preparing RS-232 connection diagram 10)	15m	- (Built into GOT)	GT21 GT21	

*1 Product manufactured by Panasonic Industrial Devices SUNX Co., Ltd. For details of this product, contact Panasonic Industrial Devices SUNX Co., Ltd.

*2 When a GT10-C02H-6PT9P unit of the sub version A or B is used, do not ground the case of the D-sub (9-pin) connector.

15.2.4 Connecting to FP3 or FP5

■1. When connecting to tool port

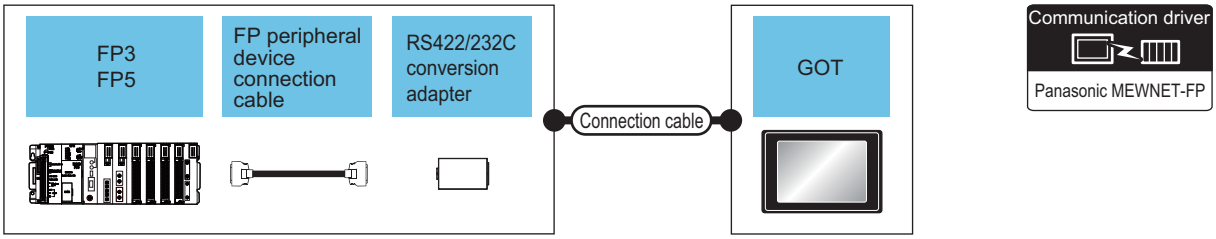

PLC				Connection cable	Max. distance	GOT		Number of connectable equipment
Model name	FP peripheral device connection cable*1 Cable model Connection diagram number	RS422/232C conversion adapter*1	Communication Type	Cable model Connection diagram number		Option device	Model	
FP3 FP5	AFP5520 (0.5m)	AFP8550	RS-232	GT09-C30R20901-25P(3m) or User preparing RS-232 connection diagram 1)	15.5m	- (Built into GOT)	GT27 GT25 GT23 GT21 GS	1 GOT for 1 RS422/232 conversion adapter
						GT15-RS2-9P	GT27 GT25	
						GT10-C02H-6PT9P*2	GT21 R4 GT21 R2	
				User preparing RS-232 connection diagram 8)	15.5m	- (Built into GOT)	GT21 GT21 R2	

*1 Product manufactured by Panasonic Industrial Devices SUNX Co., Ltd. For details of this product, contact Panasonic Industrial Devices SUNX Co., Ltd.

*2 When a GT10-C02H-6PT9P unit of the sub version A or B is used, do not ground the case of the D-sub (9-pin) connector.

■2. When connecting to computer communication unit

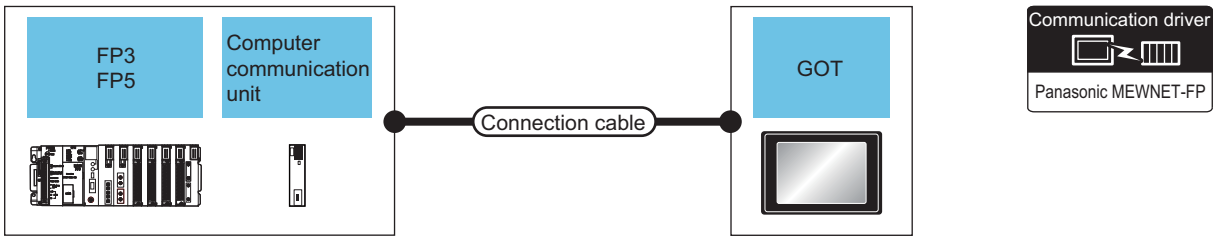

PLC			Connection cable	Max. distance	GOT		Number of connectable equipment
Model name	Computer communication unit*1	Communication Type	Cable model Connection diagram number		Option device	Model	
FP3	AFP3462	RS-232	AFB85853(3m)*1 GT09-C30R20902-9P(3m) or User preparing RS-232 connection diagram 2)	15m	- (Built into GOT)	GT27 GT25 GT23 GT21(05Q) GS	1 GOT for 1 computer communication unit
					GT15-RS2-9P	GT27 GT25	
					GT10-C02H-6PT9P*2	GT21(03P 04P R4) GT21(03P 04P R2)	
			User preparing RS-232 connection diagram 10)	15m	- (Built into GOT)	GT21(04R) GT21(03P 04P R2)	
FP5	AFP5462	RS-232	AFB85853(3m)*1 GT09-C30R20902-9P(3m) or User preparing RS-232 connection diagram 2)	15m	- (Built into GOT)	GT27 GT25 GT23 GT21(05Q) GS	
					GT15-RS2-9P	GT27 GT25	
					GT10-C02H-6PT9P*2	GT21(03P 04P R4) GT21(03P 04P R2)	
			User preparing RS-232 connection diagram 10)	15m	- (Built into GOT)	GT21(04R) GT21(03P 04P R2)	

*1 Product manufactured by Panasonic Industrial Devices SUNX Co., Ltd. For details of this product, contact Panasonic Industrial Devices SUNX Co., Ltd.

*2 When a GT10-C02H-6PT9P unit of the sub version A or B is used, do not ground the case of the D-sub (9-pin) connector.

15.2.5 Connecting to FP10(S)

■1. When connecting to tool port

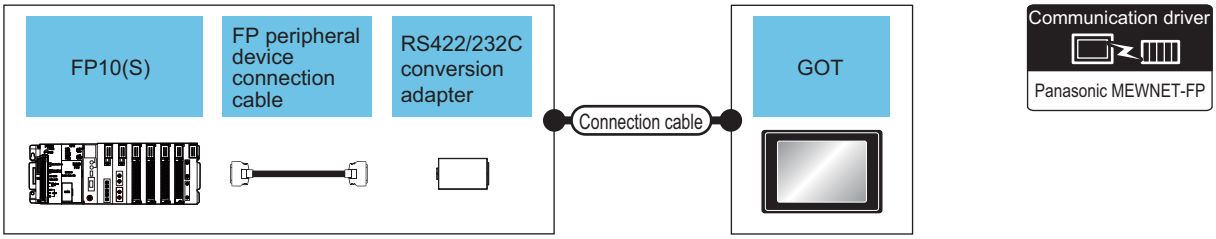

PLC				Connection cable	Max. distance	GOT		Number of connectable equipment
Model name	FP peripheral device connection cable*1 Cable model Connection diagram number	RS422/232 conversion adapter*1	Communication Type	Cable model Connection diagram number		Option device	Model	
FP10(S)	AFP5520(0.5m)	AFP8550	RS-232	GT09-C30R20901-25P or User preparing RS-232 connection diagram 1)	15.5m	- (Built into GOT)	GT27 GT25 GT23 GT21 GS	1 GOT for 1 RS422/232 conversion adapter
						GT15-RS2-9P	GT27 GT25	
						GT10-C02H-6PT9P*2	GT21 GT21	
				User preparing RS-232 connection diagram 8)	15.5m	- (Built into GOT)	GT21 GT21	

*1 Product manufactured by Panasonic Industrial Devices SUNX Co., Ltd. For details of this product, contact Panasonic Industrial Devices SUNX Co., Ltd.

*2 When a GT10-C02H-6PT9P unit of the sub version A or B is used, do not ground the case of the D-sub (9-pin) connector.

■2. When connecting to RS232C port

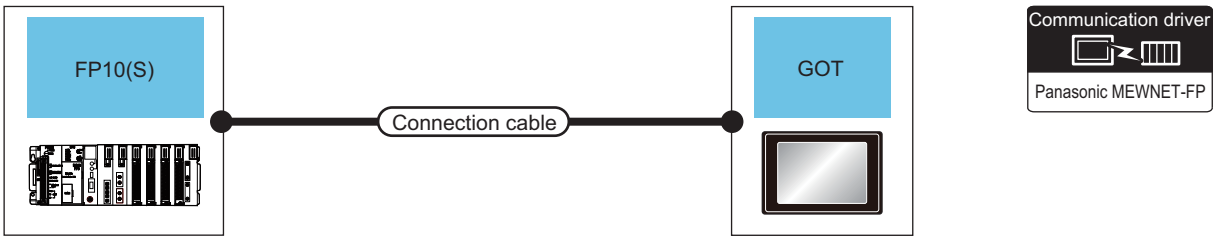

PLC		Connection cable	Max. distance	GOT		Number of connectable equipment
Model name	Communication Type	Cable model Connection diagram number		Option device	Model	
FP10(S)	RS-232	AFB85853(3m)*1 GT09-C30R20902-9P(3m) or User preparing RS-232 connection diagram 2)	15m	- (Built into GOT)	GT27 GT25 GT23 GT21 GS	1 GOT for 1 PLC
				GT15-RS2-9P	GT27 GT25	
				GT10-C02H-6PT9P*2	GT21 GT21	
		AFB85853(3m)*1 GT09-C30R20902-9P(3m) or User preparing RS-232 connection diagram 2) + User preparing RS-232 connection diagram 11)	15m	- (Built into GOT)	GT21 GT21	
		User preparing RS-232 connection diagram 10)	15m	- (Built into GOT)	GT21 GT21	

*1 Product manufactured by Panasonic Industrial Devices SUNX Co., Ltd. For details of this product, contact Panasonic Industrial Devices SUNX Co., Ltd.

*2 When a GT10-C02H-6PT9P unit of the sub version A or B is used, do not ground the case of the D-sub (9-pin) connector.

■3. When connecting to computer communication unit

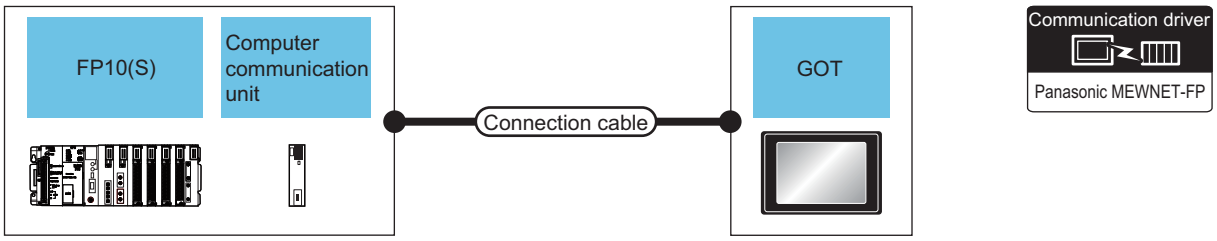

PLC			Connection cable	Max. distance	GOT		Number of connectable equipment
Model name	Computer communication unit*1	Communication Type	Cable model Connection diagram number		Option device	Model	
FP10(S)	AFP3462	RS-232	AFB85853(3m)*1 GT09-C30R20902-9P(3m) or User preparing RS-232 connection diagram 2)	15m	- (Built into GOT)	GT27 GT25 GT23 GT21 GS	1 GOT for 1 computer communication unit
					GT15-RS2-9P	GT27 GT25	
					GT10-C02H-6PT9P*2	GT21 GT21	
			User preparing RS-232 connection diagram 10)	15m	- (Built into GOT)	GT21 GT21	

*1 Product manufactured by Panasonic Industrial Devices SUNX Co., Ltd. For details of this product, contact Panasonic Industrial Devices SUNX Co., Ltd.

*2 When a GT10-C02H-6PT9P unit of the sub version A or B is used, do not ground the case of the D-sub (9-pin) connector.

15.2.6 Connecting to FP10SH

■1. When connecting to tool port or RS232C port

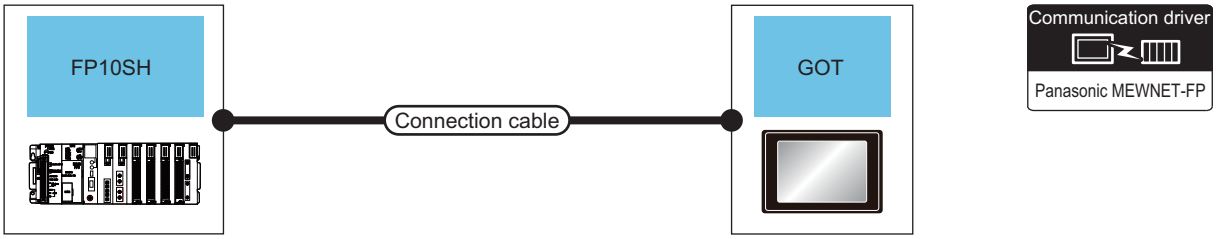

PLC		Connection cable	Max. distance	GOT		Number of connectable equipment
Model name	Communication Type	Cable model Connection diagram number		Option device	Model	
FP10SH	RS-232	AFB85853(3m)*1 GT09-C30R20902-9P(3m) or User preparing RS-232 connection diagram 2)	15m	- (Built into GOT)	GT27 GT25 GT23 GT21 GS	1 GOT for 1 PLC
				GT15-RS2-9P	GT27 GT25	
				GT10-C02H-6PT9P*2	GT03P GT04P R4 GT03P GT04P R2	
		AFB85853(3m)*1 GT09-C30R20902-9P(3m) or User preparing RS-232 connection diagram 2) + User preparing RS-232 connection diagram 11)	15m	- (Built into GOT)	GT04R GT03P GT04P R2	
		User preparing RS-232 connection diagram 10)	15m	- (Built into GOT)	GT04R GT03P GT04P R2	

*1 Product manufactured by Panasonic Industrial Devices SUNX Co., Ltd. For details of this product, contact Panasonic Industrial Devices SUNX Co., Ltd.

*2 When a GT10-C02H-6PT9P unit of the sub version A or B is used, do not ground the case of the D-sub (9-pin) connector.

■2. When connecting to computer communication unit

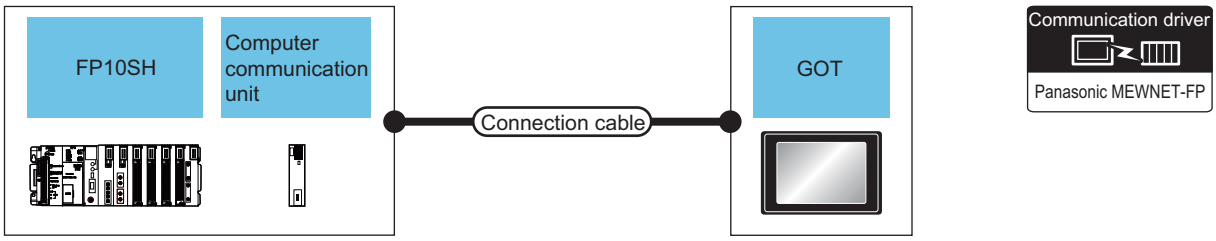

PLC			Connection cable	Max. distance	GOT		Number of connectable equipment
Model name	Computer communication unit*1	Communication Type	Cable model Connection diagram number		Option device	Model	
FP10SH	AFP3462	RS-232	AFB85853(3m)*1 GT09-C30R20902-9P(3m) or User preparing RS-232 connection diagram 2)	15m	- (Built into GOT)	GT27 GT25 GT23 GT21(05Q) GS	1 GOT for 1 computer communication unit
					GT15-RS2-9P	GT27 GT25	
					GT10-C02H-6PT9P*2	GT21(03B 04P R4) GT21(03P 04P R2)	
			User preparing RS-232 connection diagram 10)	15m	- (Built into GOT)	GT21(04R) GT21(03P 04P R2)	

*1 Product manufactured by Panasonic Industrial Devices SUNX Co., Ltd. For details of this product, contact Panasonic Industrial Devices SUNX Co., Ltd.

*2 When a GT10-C02H-6PT9P unit of the sub version A or B is used, do not ground the case of the D-sub (9-pin) connector.

15.2.7 Connecting to FP-M(C20TC) or FP-M(C32TC)

■1. When connecting to tool port or RS232C port

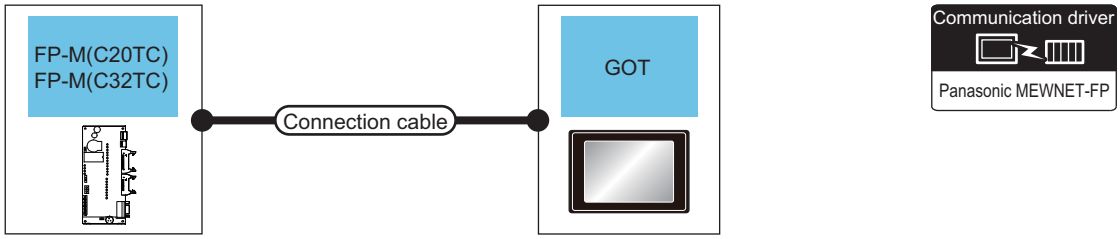

PLC		Connection cable	Max. distance	GOT		Number of connectable equipment
Model name	Communication Type	Cable model Connection diagram number		Option device	Model	
FP-M(C20TC), FP-M(C32TC) (Tool port)	RS-232	AFC8503(3m)*1	3m	- (Built into GOT)	GT27 GT25 GT23 GT21(05Q) GS	1 GOT for 1 PLC
				GT15-RS2-9P	GT27 GT25	
				GT10-C02H-6PT9P*2	GT21(03B 04R 04P) GT21(03P 04P R2)	
		AFC8503(3m)*1 + User preparing RS-232 connection diagram 9)	3.5m	- (Built into GOT)	GT21(04R) GT21(03P 04P R2)	
		User preparing RS-232 connection diagram 10)	15m	- (Built into GOT)	GT21(04R) GT21(03P 04P R2)	
FP-M(C20TC), FP-M(C32TC) (RS232C port)	RS-232	AFB85853(3m)*1 GT09-C30R20902-9P(3m) or User preparing RS-232 connection diagram 2)	15m	- (Built into GOT)	GT27 GT25 GT23 GT21(05Q) GS	1 GOT for 1 PLC
				GT15-RS2-9P	GT27 GT25	
				GT10-C02H-6PT9P*2	GT21(03B 04R 04P) GT21(03P 04P R2)	
		AFB85853(3m)*1 GT09-C30R20902-9P(3m) or User preparing RS-232 connection diagram 2) + User preparing RS-232 connection diagram 11)	15m	- (Built into GOT)	GT21(04R) GT21(03P 04P R2)	
		User preparing RS-232 connection diagram 10)	15m	- (Built into GOT)	GT21(04R) GT21(03P 04P R2)	

*1 Product manufactured by Panasonic Industrial Devices SUNX Co., Ltd. For details of this product, contact Panasonic Industrial Devices SUNX Co., Ltd.

*2 When a GT10-C02H-6PT9P unit of the sub version A or B is used, do not ground the case of the D-sub (9-pin) connector.

15.2.8 Connecting to FPΣ

■1. When connecting to tool port

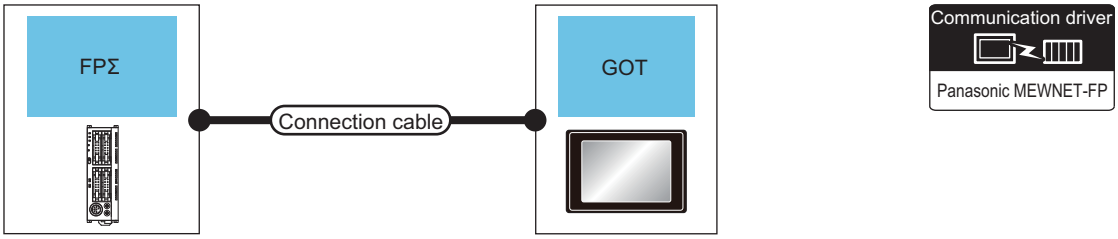

PLC		Connection cable	Max. distance	GOT		Number of connectable equipment
Model name	Communication Type	Cable model Connection diagram number		Option device	Model	
FPΣ	RS-232	AFC8503(3m)*1	3m	- (Built into GOT)	GT27 GT25 GT23 GT21 GS	1 GOT for 1 PLC
				GT15-RS2-9P	GT27 GT25	
				GT10-C02H-6PT9P*2	GT21 GT21	
		AFC8503(3m)*1 + User preparing RS-232 connection diagram 9)	3.5m	- (Built into GOT)	GT21 GT21	

*1 Product manufactured by Panasonic Industrial Devices SUNX Co., Ltd. For details of this product, contact Panasonic Industrial Devices SUNX Co., Ltd.

*2 When a GT10-C02H-6PT9P unit of the sub version A or B is used, do not ground the case of the D-sub (9-pin) connector.

■2. When connecting to COM port

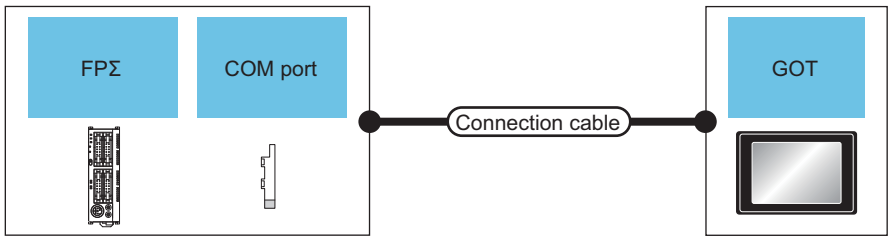

PLC			Connection cable	Max. distance	GOT		Number of connectable equipment
Model name	COM port*1	Communication Type	Cable model Connection diagram number		Option device	Model	
FP Σ	AFPG801	RS-232	User preparing RS-232 connection diagram 5)	15m	- (Built into GOT)	GT27 GT25 GT23 GT21(05Q) GS	1 GOT for 1 PLC
					GT15-RS2-9P	GT27 GT25	
					GT10-C02H-6PT9P*2	GT21(03P/04P R4) GT21(03P/04P R2)	
			User preparing RS-232 connection diagram 14)	15m	- (Built into GOT)	GT21(04R) GT21(03P/04P R2)	
	AFPG802	RS-232	User preparing RS-232 connection diagram 6)	15m	- (Built into GOT)	GT27 GT25 GT23 GT21(05Q) GS	
					GT15-RS2-9P	GT27 GT25	
					GT10-C02H-6PT9P*2	GT21(03P/04P R4) GT21(03P/04P R2)	
			User preparing RS-232 connection diagram 15)	15m	- (Built into GOT)	GT21(04R) GT21(03P/04P R2)	

*1 Product manufactured by Panasonic Industrial Devices SUNX Co., Ltd. For details of this product, contact Panasonic Industrial Devices SUNX Co., Ltd.

*2 When a GT10-C02H-6PT9P unit of the sub version A or B is used, do not ground the case of the D-sub (9-pin) connector.

15.2.9 Connecting to FP-X

■1. When connecting to tool port

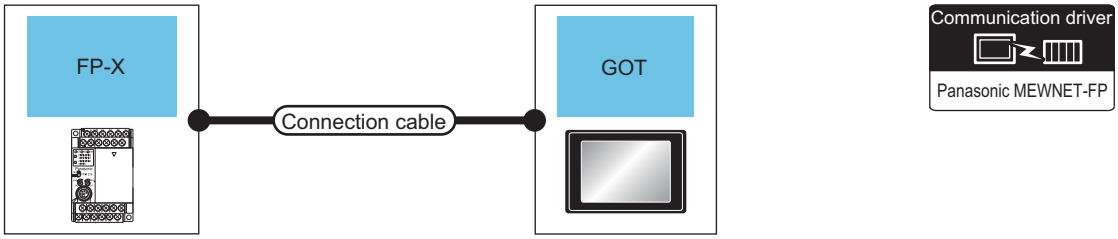

PLC		Connection cable	Max. distance	GOT		Number of connectable equipment
Model name	Communication Type	Cable model Connection diagram number		Option device	Model	
FP-X	RS-232	AFC8503(3m)*1	3m	- (Built into GOT)	GT27 GT25 GT23 GT21 GS	1 GOT for 1 PLC
				GT15-RS2-9P	GT27 GT25	
				GT10-C02H-6PT9P*2	GT21 GT21	
		AFC8503(3m)*1 + User preparing RS-232 connection diagram 9)	3.5m	- (Built into GOT)	GT21 GT21	

*1 Product manufactured by Panasonic Industrial Devices SUNX Co., Ltd. For details of this product, contact Panasonic Industrial Devices SUNX Co., Ltd.

*2 When a GT10-C02H-6PT9P unit of the sub version A or B is used, do not ground the case of the D-sub (9-pin) connector.

■2. When connecting to communication cassette

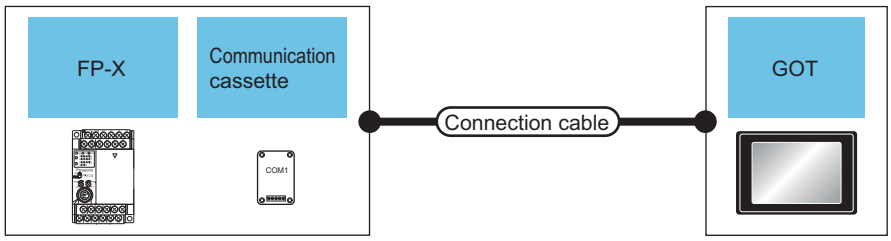

PLC			Connection cable	Max. distance	GOT		Number of connectable equipment
Model name	Communication cassette*1	Communication Type	Cable model Connection diagram number		Option device	Model	
FP-X	AFPX-COM1 (RS232C one channel type)	RS-232	User preparing RS-232 connection diagram 5)	15m	- (Built into GOT)	GT27 GT25 GT23 GT05Q21 GS	1 GOT for 1 PLC
					GT15-RS2-9P	GT27 GT25	
					GT10-C02H-6PT9P*3	GT03P21R4 GT03P21R2	
			User preparing RS-232 connection diagram 14)	15m	- (Built into GOT)	GT04R21 GT03P21R2	
	AFPX-COM2*2 (RS232C two channel type)		User preparing RS-232 connection diagram 6)	15m	- (Built into GOT)	GT27 GT25 GT23 GT05Q21 GS	
					GT15-RS2-9P	GT27 GT25	
					GT10-C02H-6PT9P*3	GT03P21R4 GT03P21R2	
			User preparing RS-232 connection diagram 15)	15m	- (Built into GOT)	GT04R21 GT03P21R2	

PLC			Connection cable	Max. distance	GOT		Number of connectable equipment
Model name	Communication cassette*1	Communication Type	Cable model Connection diagram number		Option device	Model	
FP-X	AFPX-COM3 (RS485/RS422 one channel type)	RS-422	User preparing RS-422 connection diagram 1)	1200m	- (Built into GOT)	GT27 GT25 GT23 GT21(05Q) GS	1 GOT for 1 PLC
					GT15-RS4-9S	GT27 GT25	
					GT10-C02H-9SC	GT21(04R) GT2(03P 04P R2)	
			User preparing RS-422 connection diagram 2)	1200m	- (Built into GOT)	GT21(04R) GT2(03P 04P ET/R4) GT2(03P 04P R4)	
	AFPX-COM4*2 (RS485 one channel and RS232C one channel mixed type)	RS-232	User preparing RS-232 connection diagram 7)	15m	- (Built into GOT)	GT27 GT25 GT23 GT21(05Q) GS	
					GT15-RS2-9P	GT27 GT25	
					GT10-C02H-6PT9P*3	GT2(03P 04P R4) GT2(03P 04P R2)	
			User preparing RS-232 connection diagram 16)	15m	- (Built into GOT)	GT21(04R) GT2(03P 04P R2)	

*1 Product manufactured by Panasonic Industrial Devices SUNX Co., Ltd. For details of this product, contact Panasonic Industrial Devices SUNX Co., Ltd.

*2 To connect C30 and C60, USB port may set at the COM2 port on AFPX-COM2 and AFPX-COM4. In this case, set the COM2 port to RS232C.

*3 When a GT10-C02H-6PT9P unit of the sub version A or B is used, do not ground the case of the D-sub (9-pin) connector.

15.2.10 Connecting to FP7

■1. When connecting to Serial port built into CPU module

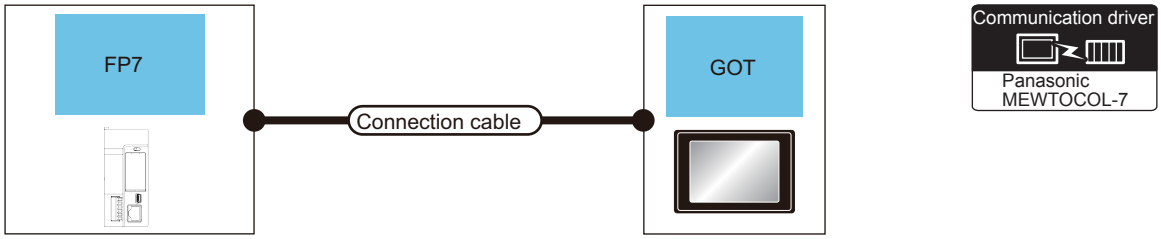

PLC		Connection cable	Max. distance	GOT		Number of connectable equipment
Model name	Communication Type	Cable model Connection diagram number		Option device	Model	
FP7	RS-232	User preparing RS-232 connection diagram 17)	15m	- (Built into GOT)	GT27 GT25 GT23 GT21 GS	1 GOT for 1 PLC
				GT15-RS2-9P	GT27 GT25	
				GT10-C02H-6PT9P*2	GT21	
		User preparing RS-232 connection diagram 18)	15m	- (Built into GOT)	GT21	

*1 Product manufactured by Panasonic Industrial Devices SUNX Co., Ltd. For details of this product, contact Panasonic Industrial Devices SUNX Co., Ltd.

*2 When a GT10-C02H-6PT9P unit of the sub version A or B is used, do not ground the case of the D-sub (9-pin) connector.

■2. When connecting to communication cassette

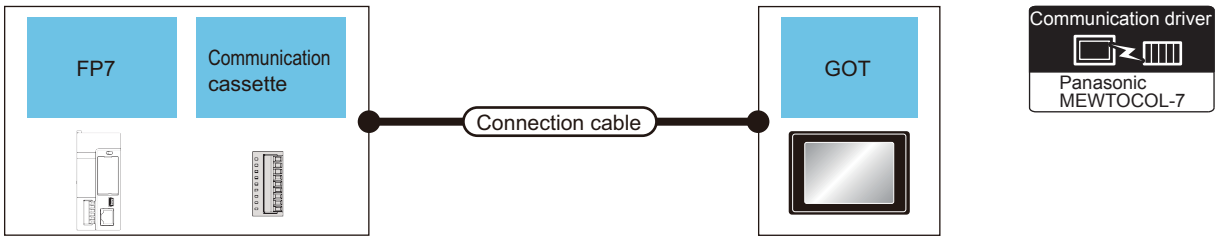

PLC			Connection cable	Max. distance	GOT		Number of connectable equipment
Model name	Communication cassette*1	Communication Type	Cable model Connection diagram number		Option device	Model	
FP7	AFP7CCS1	RS-232	User preparing RS-232 connection diagram 17)	15m	- (Built into GOT)	GT27 GT25 GT23 GT21(05Q) GS	1 GOT for 1 PLC
					GT15-RS2-9P	GT27 GT25	
					GT10-C02H-6PT9P*2	GT21(03P R4) GT21(04P R4) GT21(03P R2) GT21(04P R2)	
			User preparing RS-232 connection diagram 18)	15m	- (Built into GOT)	GT21(04R) GT21(03P R2) GT21(04P R2)	
	AFP7CCS2 ([3 Wire] is selected)	RS-232	User preparing RS-232 connection diagram 17) (3 Wire)	15m	- (Built into GOT)	GT27 GT25 GT23 GT21(05Q) GS	
					GT15-RS2-9P	GT27 GT25	
					GT10-C02H-6PT9P*2	GT21(03P R4) GT21(04P R4) GT21(03P R2) GT21(04P R2)	
			User preparing RS-232 connection diagram 18) (3 Wire)	15m	- (Built into GOT)	GT21(04R) GT21(03P R2) GT21(04P R2)	

PLC			Connection cable	Max. distance	GOT		Number of connectable equipment
Model name	Communication cassette*1	Communication Type	Cable model Connection diagram number		Option device	Model	
FP7	AFP7CCS2 ([5 Wire] is selected)	RS-232	User preparing RS-232 connection diagram 19) (5 Wire)	15m	- (Built into GOT)	GT27 GT25 GT23 GT21(050) GS	1 GOT for 1 PLC
					GT15-RS2-9P	GT27 GT25	
					GT10-C02H-6PT9P*2	GT21(03P,04P R4) GT21(03P,04P R2)	
			User preparing RS-232 connection diagram 20) (5 Wire)	15m	- (Built into GOT)	GT21(04R) GT21(03P,04P R2)	
	AFP7CCS1M1 ([RS-422] is selected)	RS-422	User preparing RS-422 connection diagram 3)	400m	- (Built into GOT)	GT27 GT25 GT23 GT21(050) GS	
					GT15-RS4-9S	GT27 GT25	
					GT10-C02H-9SC	GT21(04R) GT21(03P,04P R4)	
			User preparing RS-422 connection diagram 4)	400m	- (Built into GOT)	GT21(04R) GT21(03P,04P ET/R4) GT21(03P,04P R4)	
	AFP7CCS1M1 ([RS-485] is selected)	RS-485	User preparing RS-485 connection diagram 1)	1200m	- (Built into GOT)	GT27 GT25 GT23 GT21(050) GS	
					GT15-RS4-9S	GT27 GT25	
					GT10-C02H-9SC	GT21(04R) GT21(03P,04P R4)	
			User preparing RS-485 connection diagram 2)	1200m	- (Built into GOT)	GT21(04R) GT21(03P,04P ET/R4) GT21(03P,04P R4)	

PLC			Connection cable	Max. distance	GOT		Number of connectable equipment
Model name	Communication cassette*1	Communication Type	Cable model Connection diagram number		Option device	Model	
FP7	AFP7CCS1M2 ([RS-422] is selected)	RS-422	User preparing RS-422 connection diagram 3)	400m	- (Built into GOT)	GT27 GT25 GT23 GT21(05Q) GS	1 GOT for 1 PLC
					GT15-RS4-9S	GT27 GT25	
					GT10-C02H-9SC	GT21(04R) GT2(03P)(04P)R4	
			User preparing RS-422 connection diagram 4)	400m	- (Built into GOT)	GT21(04R) GT2(03P)(04P)ET/R4 GT2(03P)(04P)R4	
	AFP7CCS1M2 ([RS-485] is selected)	RS-485	User preparing RS-485 connection diagram 1)	1200m	- (Built into GOT)	GT27 GT25 GT23 GT21(05Q) GS	
					GT15-RS4-9S	GT27 GT25	
					GT10-C02H-9SC	GT21(04R) GT2(03P)(04P)R4	
			User preparing RS-485 connection diagram 2)	1200m	- (Built into GOT)	GT21(04R) GT2(03P)(04P)ET/R4 GT2(03P)(04P)R4	
	AFP7CCS1M1	RS-232	User preparing RS-232 connection diagram 17)	15m	- (Built into GOT)	GT27 GT25 GT23 GT21(05Q) GS	
					GT15-RS2-9P	GT27 GT25	
					GT10-C02H-6PT9P*2	GT2(03P)(04P)R4 GT2(03P)(04P)R2	
			User preparing RS-232 connection diagram 18)	15m	- (Built into GOT)	GT21(04R) GT2(03P)(04P)R2	

PLC			Connection cable	Max. distance	GOT		Number of connectable equipment
Model name	Communication cassette*1	Communication Type	Cable model Connection diagram number		Option device	Model	
FP7	AFP7CCS1M1	RS-485	User preparing RS-485 connection diagram 1)	1200m	- (Built into GOT)	GT27 GT25 GT23 GT21 GS	1 GOT for 1 PLC
					GT15-RS4-9S	GT27 GT25	
					GT10-C02H-9SC	GT2103P-04P-R4 GT2103P-04P-R2	
			User preparing RS-485 connection diagram 2)	1200m	- (Built into GOT)	GT2104R GT2103P-04P-ET/R4 GT2103P-04P-R4	

*1 Product manufactured by Panasonic Industrial Devices SUNX Co., Ltd. For details of this product, contact Panasonic Industrial Devices SUNX Co., Ltd.

*2 When a GT10-C02H-6PT9P unit of the sub version A or B is used, do not ground the case of the D-sub (9-pin) connector.

15.3 Connection Diagram

The following diagram shows the connection between the GOT and the PLC.

15.3.1 RS-232 cable

■1. Connection diagram

(1) RS-232 connection diagram 1)

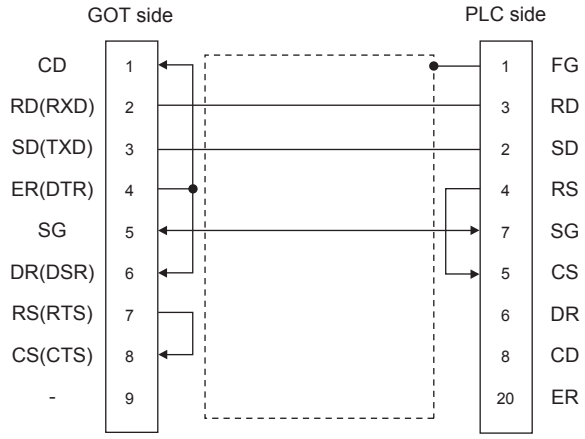

(2) RS-232 connection diagram 2)

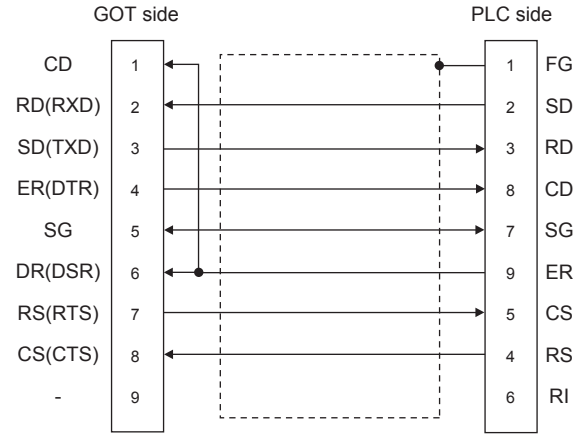

(3) RS-232 connection diagram 3)

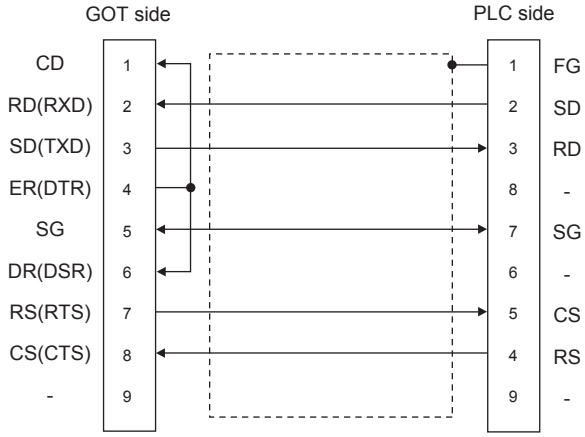

(4) RS-232 connection diagram 4)

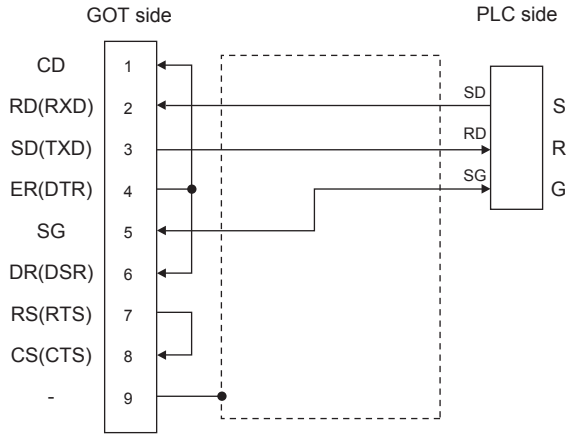

(5) RS-232 connection diagram 5)

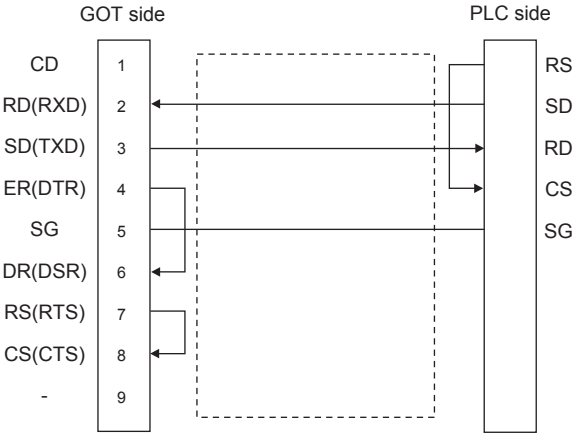

(6) RS-232 connection diagram 6)

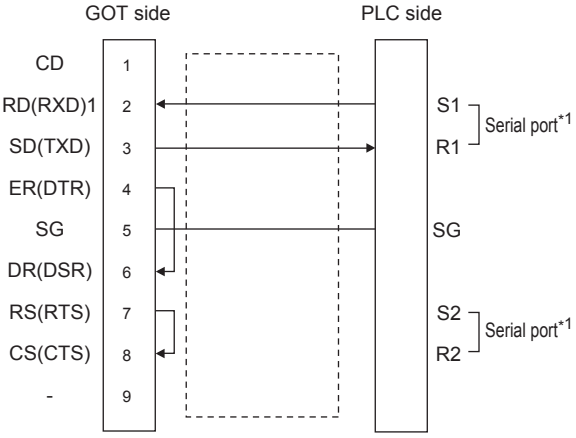

(7) RS-232 connection diagram 7)

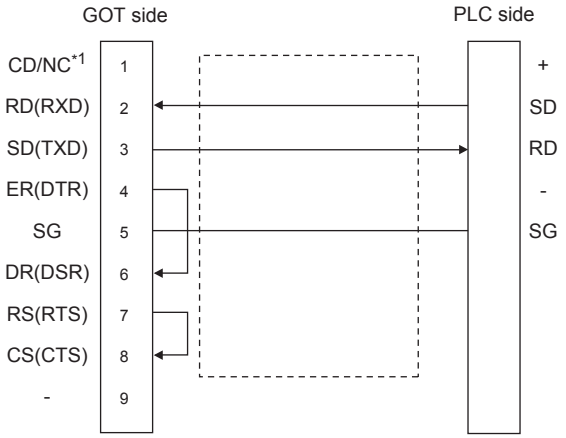

*1 GT27: CD, GT23:NC

(8) RS-232 connection diagram 8)

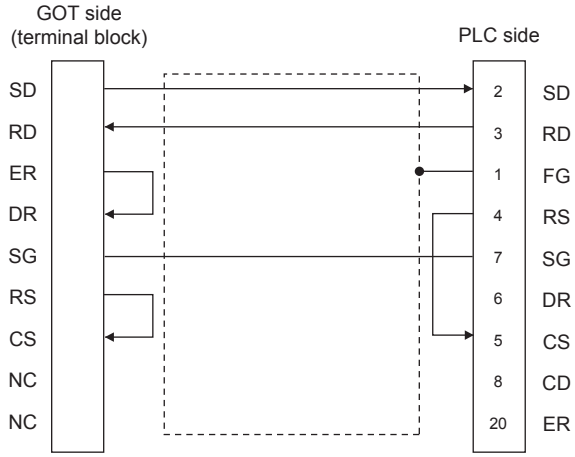

(9) RS-232 connection diagram 9)

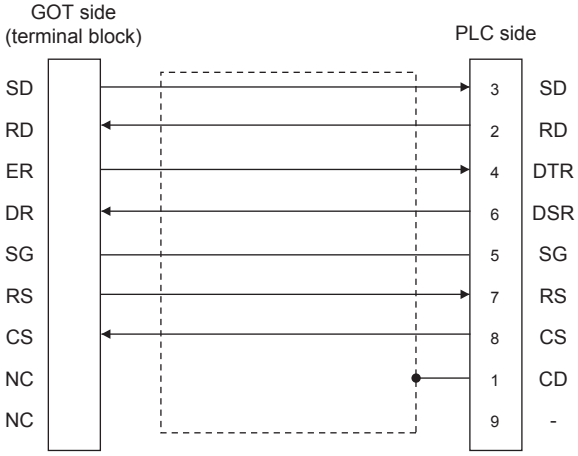

(10) RS-232 connection diagram 10)

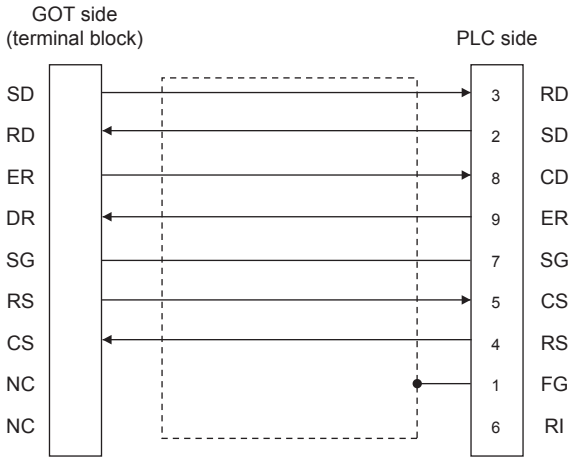

(11) RS-232 connection diagram 11)

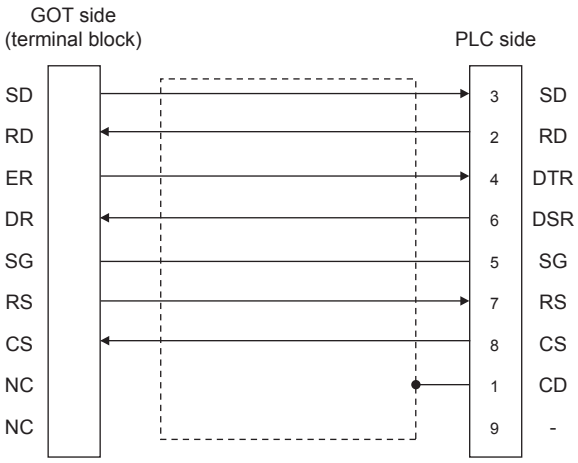

(12) RS-232 connection diagram 12)

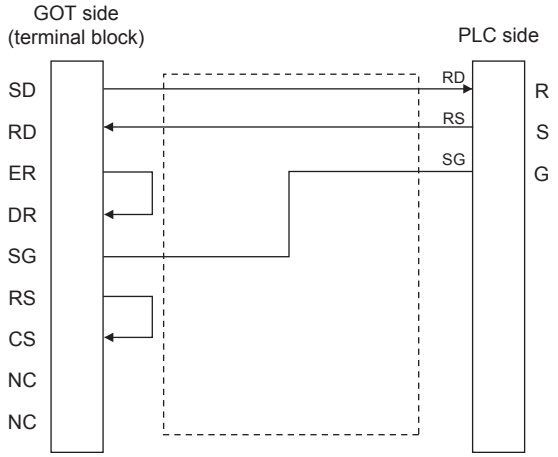

(13) RS-232 connection diagram 13)

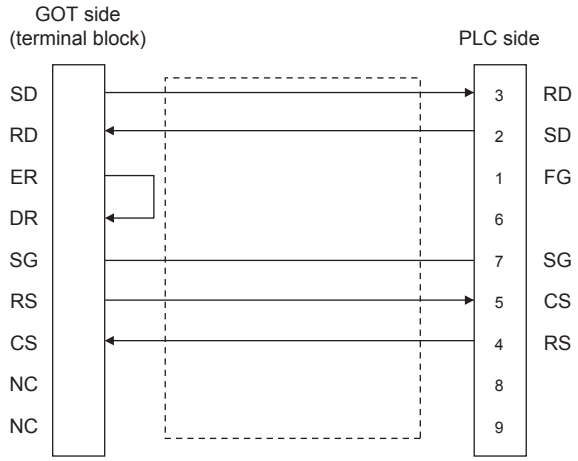

(14) RS-232 connection diagram 14)

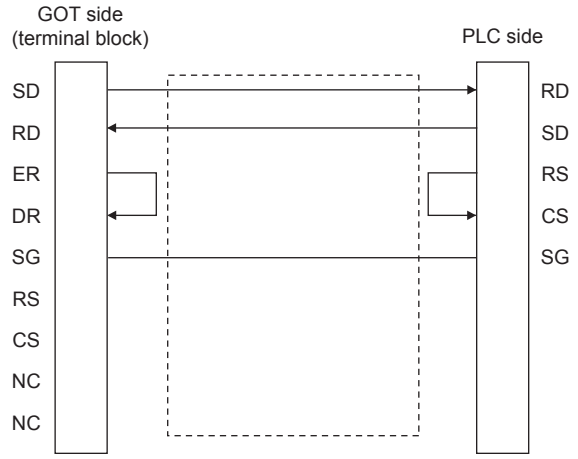

(15) RS-232 connection diagram 15)

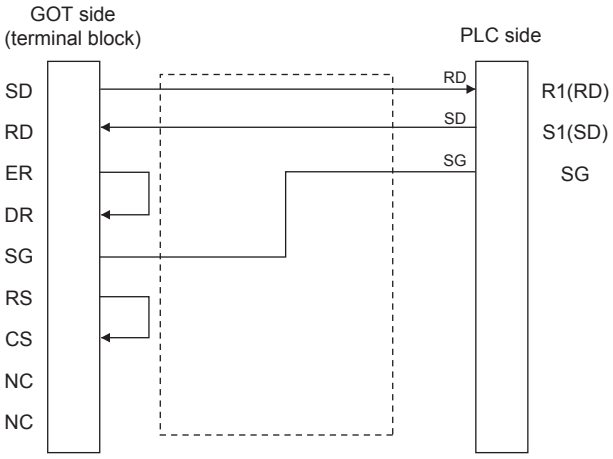

(16) RS-232 connection diagram 16)

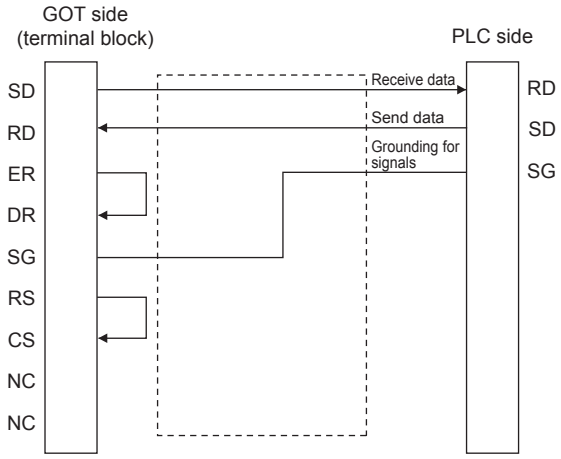

(17) RS-232 connection diagram 17)

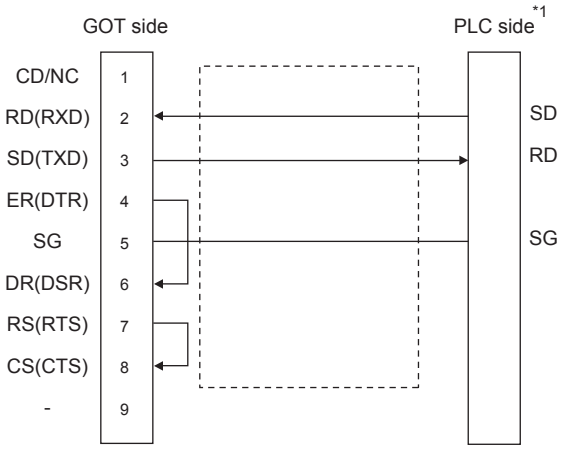

*1 The details of the connection on the PLC are shown below.
Built-in port: COM.0
Communication cassette: AFP7CCS1, AFP7CCS2 of CH1([3 Wire] is selected), AFP7CCS2 of CH2([3 Wire] is selected), AFP7CCS1M1

(18) RS-232 connection diagram 18)

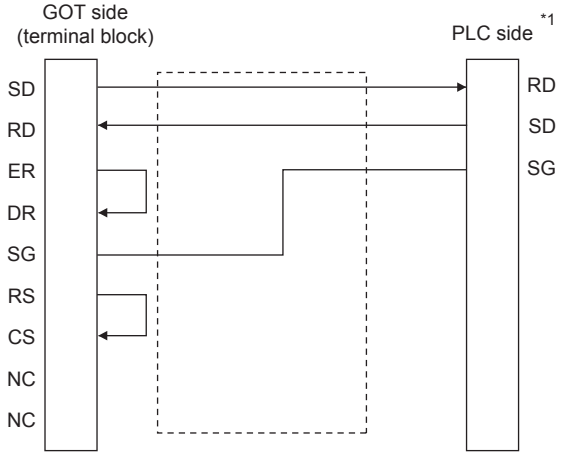

*1 The details of the connection on the PLC are shown below.
Built-in port: COM.0
Communication cassette: AFP7CCS1, AFP7CCS2 of CH1([3 Wire] is selected), AFP7CCS2 of CH2([3 Wire] is selected), AFP7CCS1M1

(19) RS-232 connection diagram 19)

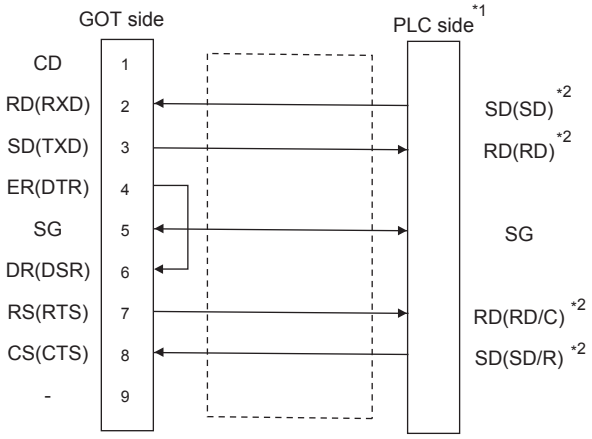

*1 The details of the connection on the PLC are shown below.
Communication cassette: AFP7CCS2([5 Wire] is selected)

*2 Connect to the terminal for which the front panel LED of the communication cassette shown in parentheses is ON.

(20) RS-232 connection diagram 20)

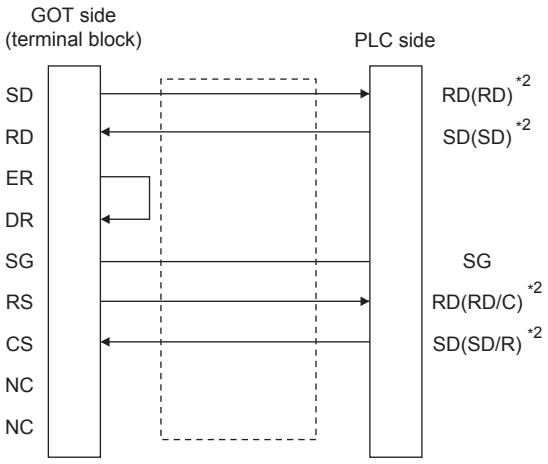

*1 The details of the connection on the PLC are shown below.
Communication cassette : AFP7CCS2([5 Wire] is selected)

*2 Connect to the terminal for which the front panel LED of the communication cassette shown in parentheses is ON.

■2. Precautions when preparing a cable

(1) Cable length

The length of the RS-232 cable must be 15m or less.The length of the cable must be 3m or less with a transmission speed of 38400bps.

(2) GOT side connector

For the GOT side connector, refer to the following.

➠ 1.4.1 GOT connector specifications

(3) Connector for Panasonic Industrial Devices SUNX PLC

Use the connector applicable to the Panasonic Industrial Devices SUNX PLC.
For details, refer to the Panasonic Industrial Devices SUNX PLC user's manual.

15.3.2 RS-422 cable

■1. Connection diagram

(1) RS-422 connection diagram 1)

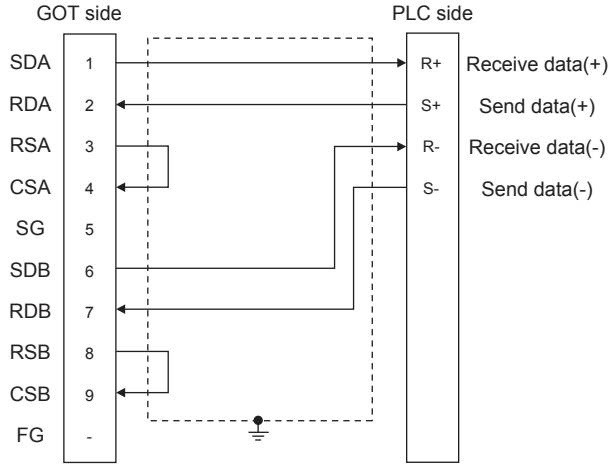

(2) RS-422 connection diagram 2)

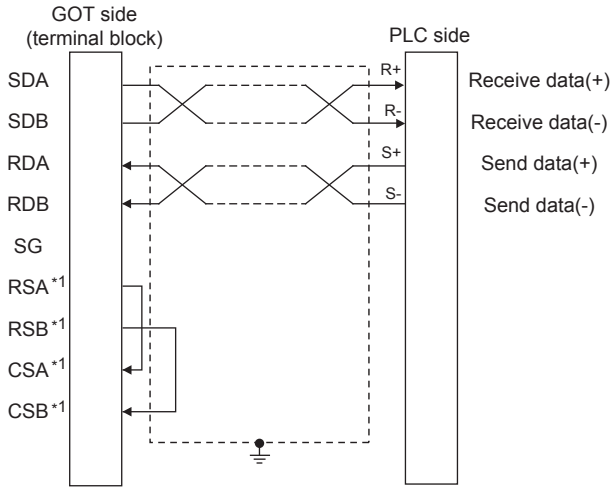

*1 The signals RSA, RSB, CSA, and CSB are not provided for GT21 03P 04P ET/R4. Return connection is not required.

(3) RS-422 connection diagram 3)

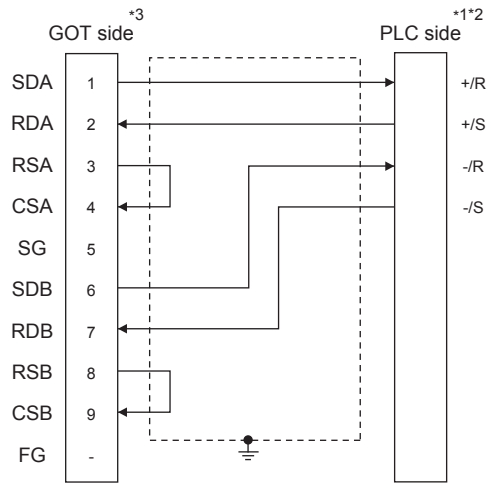

*1 The details of the connection on the PLC are shown below.
Communication cassette: AFP7CCM1, AFP7CCM2 of CH1([RS-422] is selected), AFP7CCM2 of CH2([RS-422] is selected)

*2 Set the terminating resistor settings of the PLC side to [ON].

*3 For the GOT side terminating resistor settings, refer to the following.
GT27, GT25, GT23: Connecting terminating resistors "Disable"
GT21, GS: Connecting terminating resistors "330Ω"

(4) RS-422 connection diagram 4)

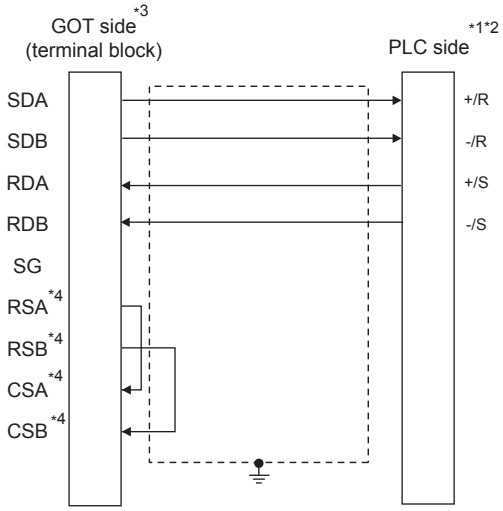

*1 The details of the connection on the PLC are shown below.
Communication cassette: AFP7CCM1, AFP7CCM2 of CH1([RS-422] is selected), AFP7CCM2 of CH2([RS-422] is selected)

*2 Set the terminating resistor settings of the PLC side to [ON].

*3 Set the terminating resistor settings of the GOT side to "330Ω".

*4 The signals RSA, RSB, CSA, and CSB are not provided for GT03P, GT04P, ET/R4. Return connection is not required.

■2. Precautions when preparing a cable

(1) Cable length

The length of the RS-422 cable must be 1200m or less.

(2) GOT side connector

For the GOT side connector, refer to the following.

➠ 1.4.1 GOT connector specifications

(3) Connector for Panasonic Industrial Devices SUNX PLC

Use the connector applicable to the Panasonic Industrial Devices SUNX PLC.
For details, refer to the Panasonic Industrial Devices SUNX PLC user's manual.

■3. Connecting terminating resistors

(1) GOT side

(a) For GT27, GT25, GT23

Set the terminating resistor setting switch of the GOT main unit to "Disable".

(b) For GT21

Set the terminating resistor selector to "330Ω".

For details of terminating resistor settings, refer to the following.

➠ 1.4.3 Terminating resistors of GOT

15.3.3 RS-485 cable

■1. Connection diagram

(1) RS-485 connection diagram 1)

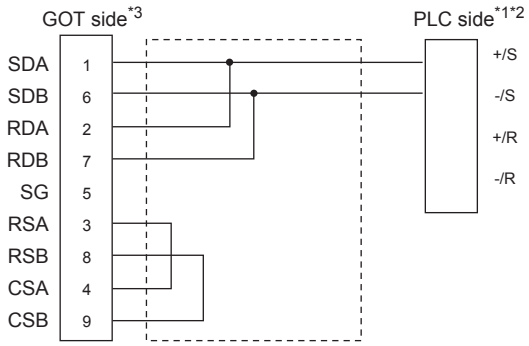

*1 The details of the connection on the PLC are shown below.
Communication cassette: AFP7CCM1([RS-485] is selected), AFP7CCM2 of CH1([RS-485] is selected), AFP7CCM2 of CH2([RS-485] is selected)

*2 Set the terminating resistor settings of the PLC side to [ON].

*3 For the GOT side terminating resistor settings, refer to the following.
GT27, GT25, GT23: Connecting terminating resistors "Disable"
GT21: Connecting terminating resistors "110Ω"

(2) RS-485 connection diagram 2)

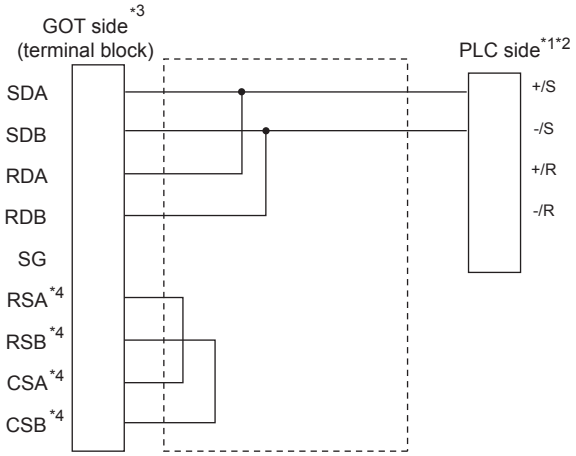

*1 The details of the connection on the PLC are shown below.
Communication cassette: AFP7CCM1([RS-485] is selected), AFP7CCM2 of CH1([RS-485] is selected), AFP7CCM2 of CH2([RS-485] is selected)

*2 Set the terminating resistor settings of the PLC side to [ON].

*3 Set the terminating resistor settings of the GOT side to "110Ω".

*4 The signals RSA, RSB, CSA, and CSB are not provided for GT 2103P 2104P ST R4. Return connection is not required.

■2. Precautions when preparing a cable

(1) Cable length

The length of the RS-485 cable must be 1200m or less.

(2) GOT side connector

For the GOT side connector, refer to the following.

➠ 1.4.1 GOT connector specifications

(3) Connector for Panasonic Industrial Devices SUNX PLC

Use the connector applicable to the Panasonic Industrial Devices SUNX PLC.
For details, refer to the Panasonic Industrial Devices SUNX PLC user's manual.

■3. Connecting terminating resistors

(1) GOT side

(a) For GT27, GT25, GT23

Set the terminating resistor setting switch of the GOT main unit to "Disable".

(b) For GT21

Set the terminating resistor selector to "110Ω".
For details of terminating resistor settings, refer to the following.

➠ 1.4.3 Terminating resistors of GOT

15.4.1 Setting communication interface (Communication settings)

Set the channel of the equipment to be connected to the GOT.

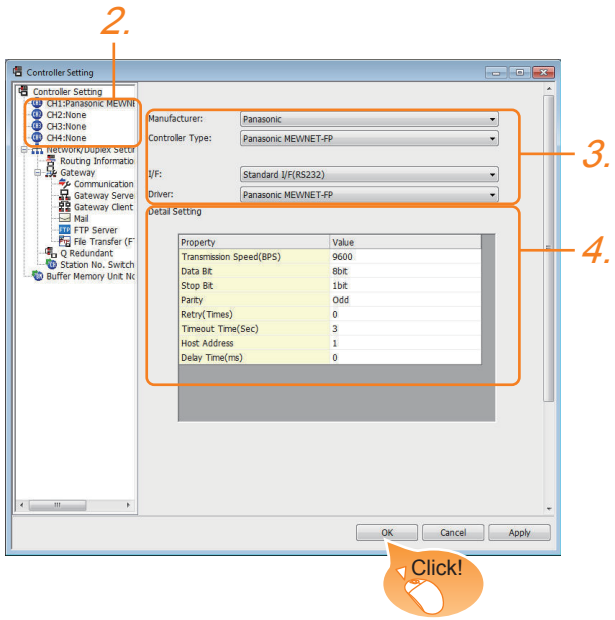

Step 1. Select [Common] → [Controller Setting] from the menu.

Step 2. The Controller Setting window is displayed. Select the channel to be used from the list menu.

Step 3. Set the following items.

- Manufacturer: Panasonic
- Controller Type: Set the following items
  <Connecting to FP0/1/2/3/5, FP-M, FP-Σ, FP->
  Panasonic MEWNET-FP
  <Connecting to FP7>
  Panasonic FP7
- I/F: Interface to be used
- Driver: Set the following items
  <Connecting to FP0/1/2/3/5, FP-M, FP-Σ, FP-X>
  Panasonic MEWNET-FP
  <Connecting to FP7>
  Panasonic MEWTOCOL-7

Step 4. The detailed setting is displayed after Manufacturer, Controller Type, I/F, and Driver are set. Make the settings according to the usage environment.

➠ 15.4.2 Communication detail settings

Click the [OK] button when settings are completed.

POINT

The settings of connecting equipment can be confirmed in [I/F Communication Setting]. For details, refer to the following.

➠ 1.1.2 I/F communication setting

15.4.2 Communication detail settings

Make the settings according to the usage environment.

■1. Panasonic MEWNET-FP

Property	Value
Transmission Speed(BPS)	9600
Data Bit	8 bit
Stop Bit	1 bit
Parity	Odd
Retry(Times)	0
Timeout Time(Sec)	3
Host Address	1
Delay Time(ms)	0

Item	Description	Range
Transmission Speed	Set this item when change the transmission speed used for communication with the connected equipment. (Default: 9600bps)	4800bps, 9600bps, 19200bps, 38400bps, 57600bps, 115200bps
Data Bit	Set this item when change the data length used for communication with the connected equipment. (Default: 8bits)	7bits/8bits
Retry	Set the number of retries to be performed when a communication timeout occurs. When receiving no response after retries, the communication times out. (Default: 0time)	0 to 5times
Timeout Time	Set the time period for a communication to time out. (Default: 3sec)	1 to 30sec
Host Address	Specify the host address (station No. of the PLC to which the GOT is connected) in the network of the GOT. (Default: 1)	1 to 31
Delay Time	Set this item to adjust the transmission timing of the communication request from the GOT. (Default: 0ms)	0 to 300 (ms)

■2. Panasonic MEWTOCOL-7

Property	Value
Transmission Speed(BPS)	9600
Data Bit	8bit
Stop Bit	1bit
Parity	Odd
Retry(Times)	0
Timeout Time(Sec)	3
Delay Time(ms)	0

Item	Description	Range
Transmission Speed	Set this item when change the transmission speed used for communication with the connected equipment. (Default: 9600bps)	4800bps, 9600bps, 19200bps, 38400bps, 57600bps, 115200bps
Data Bit	Set this item when change the data length used for communication with the connected equipment. (Default: 8bits)	7bits/8bits
Retry	Set the number of retries to be performed when a communication timeout occurs. When receiving no response after retries, the communication times out. (Default: 0time)	0 to 5times
Timeout Time	Set the time period for a communication to time out. (Default: 3sec)	1 to 30sec
Delay Time	Set this item to adjust the transmission timing of the communication request from the GOT. (Default: 0ms)	0 to 300 (ms)

POINT

(1) Communication interface setting by the Utility
The communication interface setting can be changed on the Utility's [Communication Settings] after writing [Communication Settings] of project data.
For details on the Utility, refer to the following manual.

➠ GOT2000 Series User's Manual (Utility)

(2) Precedence in communication settings
When settings are made by GT Designer3 or the Utility, the latest setting is effective.

POINT

Panasonic Industrial Devices SUNX PLC

For details of the Panasonic Industrial Devices SUNX PLC, refer to the following manual.

➡ Panasonic Industrial Devices SUNX PLC user's Manual

15.5.1 Connecting to FP0/1/2/3/5, FP-M, FP-Σ, FP-X

■1. Connecting to the tool port of the PLC CPU

Item	Set value
Transmission speed*1	4800bps, 9600bps, 19200bps, 38400bps, 57600bps, 115200bps
Data bit	7bit, 8bit
Stop bit	1bit
Parity bit	Odd
Modem connection	No
Module No.	1

*1 Indicates only the transmission speeds that can be set on the GOT side.
Set the same transmission speed of the GOT.
For the transmission speed setting on the GOT side, refer to the following.

➡ 15.4.1 Setting communication interface (Communication settings)

The setting range varies with the connected PLC.

■2. Connecting to the RS232C and COM port of the PLC CPU

Item	Set value
Transmission speed*1	4800bps, 9600bps, 19200bps, 38400bps, 57600bps, 115200bps
Data bit	7bit, 8bit
Stop bit	1bit
Parity bit	Odd
Modem connection	No
Serial port action selection*2	1 (Computer link)
Module No.	1

*1 Indicates only the transmission speeds that can be set on the GOT side.
Set the same transmission speed of the GOT.
For the transmission speed setting on the GOT side, refer to the following.

➡ 15.4.1 Setting communication interface (Communication settings)

The setting range varies with the connected PLC.

*2 Set when connecting to FP0, FP1, FP2 or FP-M.

■3. Connecting to the computer communication unit

Item	Set value
Transmission speed*1	4800bps, 9600bps, 19200bps
Data bit	7bit, 8bit
Stop bit	1bit
Parity bit	Odd
Parity check	Yes
Control signal	Invalidate CS, CD

*1 Indicates only the transmission speeds that can be set on the GOT side.
Set the same transmission speed of the GOT.
For the transmission speed setting on the GOT side, refer to the following.

➡ 15.4.1 Setting communication interface (Communication settings)

The setting range varies with the connected PLC.

■4. Connecting to the communication cassette

(1) Communication settings

Set the commnumication settings for the COM 1 port and COM2 port to connect GOT.

Item	Set value
Communication mode	Computer link
Transmission speed*1	4800bps, 9600bps, 19200bps, 38400bps, 57600bps, 115200bps
Modem connection	No
Data bit	7bit, 8bit
Parity check	Odd
Stop bit	1bit
Unit No.	1
Port selection*2	Communication cassette

*1 Indicates only the transmission speeds that can be set on the GOT side.
Set the same transmission speed of the GOT.
For the transmission speed setting on the GOT side, refer to the following.

➠ 15.4.1 Setting communication interface (Communication settings)

*2 Set the COM2 port only.

(2) Switch setting on the Communication cassette (AFPX-COM3)

Set the switch on the back.

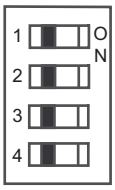

Switch No.	Setting	Setting details
1	OFF	RS422
2	OFF	
3	OFF	
4	OFF	Terminating resistor OFF

15.5.2 Connecting to FP7

Set the communication using the ladder software "FPWIN GR7".
Assign COM numbers to the CPU module's built-in SCU and communication cassette, and then set the communication settings.

Item	Set value
Communication mode	MEWTOCOL7-COM
Station No.	1
Transmission speed*1	4800bps, 9600bps, 19200bps, 38400bps, 57600bps, 115200bps
Data bit*1	7bit, 8bit
Parity bit*1	Odd
Stop bit*1	1bit
RS/CS	Invalid
Send wait time (Set value × 0.01ms)	0
Terminator code STX	Invalid
Termination setting	CR
Modem initialization	Do not initialize

*1 Adjust the settings with GOT settings.
For the setting on the GOT side, refer to the following.

➠ 15.4.1 Setting communication interface (Communication settings)

15.6 Device Range that Can Be Set

The device ranges of controller that can be used for GOT are as follows.
Note that the device ranges in the following tables are the maximum values that can be set in GT Designer3.
The device specifications of controllers may differ depending on the models, even though belonging to the same series.
Please make the setting according to the specifications of the controller actually used.
When a non-existent device or a device number outside the range is set, other objects with correct device settings may not be monitored.

■1. Setting item

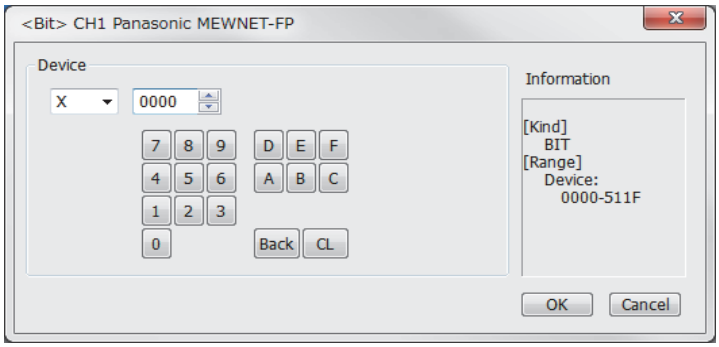

For [Panasonic MEWNET-FP]

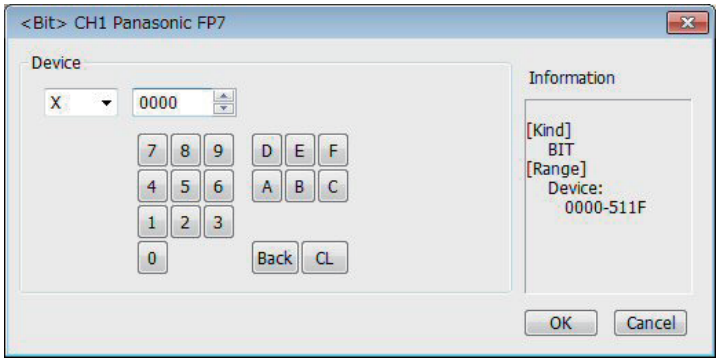

For [Panasonic FP7]

Item	Description
Device	Set the device name, device number, and bit number. The bit number can be set only when specifying the bit of word device.
Information	Displays the device type and setting range which are selected in [Device].

POINT

Device settings of PANASONIC PLC

(1) When setting a relay as a bit device
Set the device using the format of word address (DEC) + bit address (HEX).

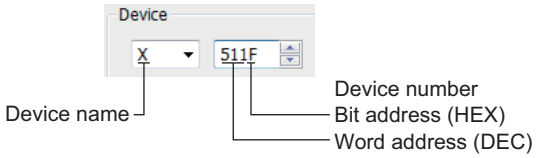

(2) When setting a relay as a word device
Set the device number.
Select the device name whose head character is “W” and set the device number in decimal.

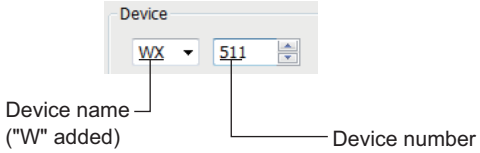

15.6.1 Panasonic Industrial Devices SUNX PLC (Panasonic MEWNET-FP)*1

Device name		Setting range	Device No. representation
Bit device	Input relay (X)*2*3	X0000 to X511F	Decimal + Hexadecimal
	Output relay (Y)*3	Y0000 to Y511F	
	Internal relay (R)	R0000 to R886F	
	Special relay (R)*2	R9000 to R911F	
	Link relay (L)*5	L0000 to L639F	
	Timer contact (T)*2*4	T0 to T3071	Decimal
	Counter contact (C)*2*4	C0 to C3071	
	Word device bit	Specified bit of the following word devices (except input relay, output relay, internal relay, special relay and link relay)	-
Word device	Input relay (WX)*2	WX000 to WX511	Decimal
	Output relay (WY)	WY000 to WY511	
	Internal relay (WR)	WR000 to WR886	
	Special relay (WR)*2	WR900 to WR911	
	Link relay (WL)	WL000 to WL639	
	Timer/Counter (Elapsed value) (EV) *4	EV0 to EV3071	
	Timer/Counter (Set value) (SV)*4	SV0 to SV3071	
	Data register (DT)	DT0 to DT10239	
	Special data register (DT)	DT0 to DT32764 DT90000 to DT90511	
	Link register (LD)*5	LD0 to LD8447	
	File register (FL)*5*6	FL0 to FL32764	
	Bit device word	Converting bit devices into word (Except Timer contact and Counter contact)	-

*1 The above device range is for the case where FP10SH is used.
For FP0, FP1, FP2, FP3, FP5, FP-10(S), or FP-M, device ranges are different in individual CPUs.
*2 Writing to device is not allowed.
*3 Only those devices that have been assigned to I/O contacts by peripheral software can be used.
*4 The device points of the timer and counter differs depending on the head numbers of the counter set by the value of the system register (No. 5).
*5 This device does not exist in FP0, FP1, and FP-M.
*6 When FP2SH is used, one bank of "32765 × 3 banks" can be monitored.

15.6.2 Panasonic Industrial Devices SUNX PLC (Panasonic FP-7)

Device name		Setting range	Device No. representation
Bit device	Input relay (X)	X0000 to X511F	Decimal + Hexadecimal
	Output relay (Y)	Y0000 to Y511F	
	Internal relay (R)	R0000 to R2047F	
	Link relay (L)	L0000 to L1023F	
	System relay (SR)*1	SR0000 to SR223F	
	Pulses relay (P)*1	P0000 to P255F	
	Direct Input (IN)*1	IN000 to IN62F	
	Direct Output (OT)*1	OT000 to OT62F	
	Input relay (Local)(_X)	_X0000 to _X511F	
	Output relay (Local)(_Y)	Y0000 to _Y511F	
	Internal relay (Local)(_R)	_R00000 to _R2047F	
	Link relay (Local)(_L)	_L00000 to _L1023F	
	Pass through relay (local)(_P)*1	_P0000 to _P255F	
	Timer contact (T)*1	T0 to T4095	Decimal
	Counter contact (C)*1	C0 to C1023	
	Error notification relay (E)*1	E0 to E4095	
	Timer contact (Local)(_T)*1	_T0 to _T4095	
	Counter contact (Local)(_C)*1	_C0 to _C1023	
	The bit specification of the word device*2 (except Input relay, Output relay, Internal relay, Special relay, Link relay)	Setting range of each word device	-
Word device	Data register (DT)	DT0 to DT999423	Decimal
	Link register (LD)	LD0 to LD16383	
	Input relay (WX)	WX000 to WX511	
	Output relay (WY)	WY000 to WY511	
	Internal relay (WR)	WR0000 to WR2047	
	Link relay (WL)	WL0000 to WL1023	
	Direct Input (WI)	WI00 to WL62	
	Direct Output (WO)	WO00 to WO62	
	System relay (WS)	WS000 to WS223	
	Unit memory (UM)	UM0 to UM524287	
	System data register (SD)	SD0 to SD255	
	Data register (Local)(_DT)	_DT0 to _DT999423	
	Link register (Local)(_LD)	_LD0 to _LD16383	
	Input relay (Local)(_WX)	_WX000 to _WX511	
	Output relay (Local)(_WY)	_WY000 to _WY511	
	Internal relay (Local)(_WR)	_WR0000 to _WR2047	
	Link relay (Local)(_WL)	_WL0000 to _WL1023	
	The word specification of the bit device (except Timer contact, Counter contact)	Setting range of each bit device	-

Device name		Setting range	Device No. representation
Double word device	Timer setting value area (TS)	TS0 to TS4095	Decimal
	Timer elapsed value area (TE)	TE0 to TE4095	
	Counter setting value area (CS)	CS0 to CS1023	
	Counter elapsed value area (CE)	CE0 to CE1023	
	Timer setting value area (local)(_TS)	_TS0 to _TS4095	
	Timer elapsed value area (local)(_TE)	_TE0 to _TE4095	
	Counter setting value area (local)(_CS)	_CS0 to CS1023	
	Counter elapsed value area (local)(_CE)	_CE0 to _CE1023	
	Index register (I)	I0 to IE	Hexadecimal

*1 Writing to device is not allowed.

*2 As bit specification of a word device is performed after the GOT reads the value, do not change the value in the sequence program during this period.

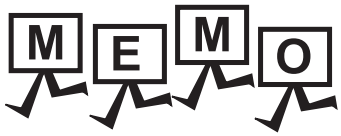
MEMO

REVISIONS

* The manual number is given on the bottom left of the back cover.

Print Date	* Manual Number	Revision
Sep., 2013	SH(NA)-081198ENG-A	Compatible with GT Works3 Version1.100E
Nov., 2013	SH(NA)-081198ENG-B	Compatible with GT Works3 Version1.104J • Changing the icons of the supported models
Jan., 2014	SH(NA)-081198ENG-C	Compatible with GT Works3 Version1.108N • The AZBIL (formerly Yamatake Corporation) temperature controller (AHC2001) is supported.
Apr., 2014	SH(NA)-081198ENG-D	Compatible with GT Works3 Version1.111R • GT25 and GS are added. • The enlargement of the communication setting range of the TOSHIBA PLC is supported.
Oct., 2014	SH(NA)-081198ENG-E	Compatible with GT Works3 Version1.122C • GT21 is added. • IP Filter setting is supported.
Jan., 2015	SH(NA)-081198ENG-F	Compatible with GT Works3 Version1.126G • GT21 corresponding to IAI robot controller connection.
Apr., 2015	SH(NA)-081198ENG-G	Compatible with GT Works3 Version1.130L • GT27 is added (GT2705-VTBD). • GT21 is added (GT2104-RTBD, GT2103-PMBDS2, GT2103-PMBLS).
Jun., 2015	SH(NA)-081198ENG-H	Compatible with GT Works3 Version1.134Q • TOSHIBA Unified Controller nv
Oct., 2015	SH(NA)-081198ENG-I	Compatible with GT Works3 Version1.144A • GT21 is added (GT2104-PMBD, GT2104-PMBDS). • GT21 corresponding to KEYENCE PLC (Ethernet connection).
Dec., 2015	SH(NA)-081198ENG-J	Compatible with GT Works3 Version1.150G • Station blocking function compatible Ethernet connection • Station monitoring function of the following connection CC-Link IE controller network connection CC-Link IE Field Network connection • GT21 corresponding to connection to OMRON temperature controller
May, 2016	SH(NA)-081198ENG-K	Compatible with GT Works3 Version1.155M • GT21 is added (GT2105-QTBDS, GT2105-QMBDS, GT2104-PMBDS2, GT2104-PMBLS). • Some corrections
Aug., 2016	SH(NA)-081198ENG-L	Compatible with GT Works3 Version1.160S • IAI robot controller connection suported device is added (RO,JIM,PNM,OSC). • GT21 is added AZBIL control equipment. • Panasonic Industrial Devices SUNX FP-7 series connection is supported. • GOT2000 series Ethernet communication unit is supported.

This manual confers no industrial property rights or any rights of any other kind, nor does it confer any patent licenses.
Mitsubishi Electric Corporation cannot be held responsible for any problems involving industrial property rights which may occur as a result of using the contents noted in this manual.

© 2013 MITSUBISHI ELECTRIC CORPORATION

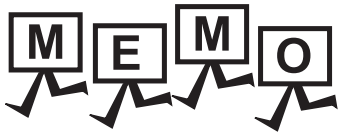
MEMO

WARRANTY

Please check the following product warranty details before using this product.

■1. Gratis Warranty Term and Gratis Warranty Range

If any faults or defects (hereinafter "Failure") found to be the responsibility of Mitsubishi occurs during use of the product within the gratis warranty term, the product shall be repaired at no cost via the sales representative or Mitsubishi Service Company.
However, if repairs are required onsite at domestic or overseas location, expenses to send an engineer will be solely at the customer's discretion.
Mitsubishi shall not be held responsible for any re-commissioning, maintenance, or testing on-site that involves replacement of the failed module.

(1) Gratis Warranty Term

The gratis warranty term of the product shall be for thirty-six (36) months after the date of purchase or delivery to a designated place.
Note that after manufacture and shipment from Mitsubishi, the maximum distribution period shall be six (6) months, and the longest gratis warranty term after manufacturing shall be forty-two (42) months.
The gratis warranty term of repair parts shall not exceed the gratis warranty term before repairs.

(2) Gratis Warranty Range

(a) The customer shall be responsible for the primary failure diagnosis unless otherwise specified.
If requested by the customer, Mitsubishi Electric Corporation or its representative firm may carry out the primary failure diagnosis at the customer's expense.
The primary failure diagnosis will, however, be free of charge should the cause of failure be attributable to Mitsubishi Electric Corporation.

(b) The range shall be limited to normal use within the usage state, usage methods, and usage environment, etc., which follow the conditions and precautions, etc., given in the instruction manual, user's manual and caution labels on the product.

(c) Even within the gratis warranty term, repairs shall be charged in the following cases.
- Failure occurring from inappropriate storage or handling, carelessness or negligence by the user. Failure caused by the user's hardware or software design.
- Failure caused by unapproved modifications, etc., to the product by the user.
- When the Mitsubishi product is assembled into a user's device, Failure that could have been avoided if functions or structures, judged as necessary in the legal safety measures the user's device is subject to or as necessary by industry standards, had been provided.
- Failure that could have been avoided if consumable parts designated in the instruction manual had been correctly serviced or replaced.
- Replacing consumable parts such as a battery, backlight, and fuse.
- Failure caused by external irresistible forces such as fires or abnormal voltages, and Failure caused by force majeure such as earthquakes, lightning, wind and water damage.
- Failure caused by reasons that could not be predicted by scientific technology standards at the time of shipment from Mitsubishi.
- Any other failure found not to be the responsibility of Mitsubishi or that admitted not to be so by the user.

■2. Onerous repair term after discontinuation of production

(1) Mitsubishi shall accept onerous product repairs for seven (7) years after production of the product is discontinued.
Discontinuation of production shall be notified with Mitsubishi Technical Bulletins, etc.

(2) Mitsubishi shall not accept a request for product supply (including spare parts) after production is discontinued.

■3. Overseas service

Overseas, repairs shall be accepted by Mitsubishi's local overseas FA Center.
Note that the repair conditions at each FA Center may differ.

■4. Exclusion of loss in opportunity and secondary loss from warranty liability

Regardless of the gratis warranty term, Mitsubishi shall not be liable for compensation to:

(1) Damages caused by any cause found not to be the responsibility of Mitsubishi.

(2) Loss in opportunity, lost profits incurred to the user by Failures of Mitsubishi products.

(3) Special damages and secondary damages whether foreseeable or not, compensation for accidents, and compensation for damages to products other than Mitsubishi products.

(4) Replacement by the user, maintenance of on-site equipment, start-up test run and other tasks.

■5. Changes in product specifications

The specifications given in the catalogs, manuals, or technical documents are subject to change without prior notice.

■6. Product application

(1) In using the Mitsubishi graphic operation terminal, the usage conditions shall be that the application will not lead to a major accident even if any problem or fault should occur in the graphic operation terminal device, and that backup and fail-safe functions are systematically provided outside of the device for any problem or fault.

(2) The Mitsubishi graphic operation terminal has been designed and manufactured for applications in general industries, etc.
Thus, applications in which the public could be affected such as in nuclear power plants and other power plants operated by respective power companies, and applications in which a special quality assurance system is required, such as for Railway companies or Public service shall be excluded from the graphic operation terminal applications.
In addition, applications in which human life or property could be greatly affected, such as in aircraft, medical, railway applications, incineration and fuel devices, manned transportation equipment, recreation and amusement devices, safety devices, shall also be excluded from the graphic operation terminal.
Even for the above applications, however, Mitsubishi Electric Corporation may consider the possibility of an application, provided that the customer notifies Mitsubishi Electric Corporation of the intention, the application is clearly defined and any special quality is not required, after the user consults the local Mitsubishi representative.

MELDAS, MELSEC, iQ Platform, MELSOFT, GOT, CC-Link, CC-Link/LT, and CC-Link IE are trademarks or registered trademarks of Mitsubishi Electric Corporation in Japan and other countries.
Microsoft, Windows, Windows Vista, Windows NT, Windows Server, SQL Server, Visual C++, Visual C#, Visual Basic, Excel, and Access are trademarks or registered trademarks of Microsoft Corporation in the United States and other countries.
Ethernet is a registered trademark of Xerox Corporation in the United States.
MODBUS is a trademark of Schneider Electric SA.
DeviceNet is a trademark of ODVA (Open DeviceNet Vendor Association, Inc.).
VNC is a registered trademark of RealVNC Ltd. in the United States and other countries.
Unicode is a trademark or registered trademark of Unicode, Inc. in the United States and other countries.
PictBridge is a registered trademark of Canon Inc.
Adobe and Adobe Reader are registered trademarks of Adobe Systems Incorporated.
Oracle and JavaScript are registered trademarks of Oracle Corporation and/or its affiliates in the United States and other countries.
QR Code is a trademark or registered trademark of DENSO WAVE INCORPORATED in Japan, the United States, and/or other countries.
Anybus is a registered trademark of HMS Industrial Networks AB.
Android and Google Chrome are trademarks or registered trademarks of Google Inc.
IOS is a trademark or registered trademark of Cisco in the U.S. and other countries and is used under license.
Safari and iPhone are trademarks of Apple Inc. registered in the United States and other countries. The iPhone trademark is used under license from AIPHONE CO., LTD.
Intel and Intel Core are trademarks or registered trademarks of Intel Corporation in the United States and other countries.
Other company and product names herein are trademarks or registered trademarks of their respective owners.

SH(NA)-081198ENG-L

GOT2000 Series Connection Manual (Non-Mitsubishi Products 1)

For GT Works3 Version1

MODEL	GOT2000-CON2-SW1-E
MODEL CODE	————
SH(NA)-081198ENG-L(1608)MEE	

When exported from Japan, this manual does not require application to the Ministry of Economy, Trade and Industry for service transaction permission.

MITSUBISHI ELECTRIC CORPORATION

HEAD OFFICE : TOKYO BUILDING, 2-7-3 MARUNOUCHI, CHIYODA-KU, TOKYO 100-8310, JAPAN
NAGOYA WORKS : 1-14 , YADA-MINAMI 5-CHOME , HIGASHI-KU, NAGOYA , JAPAN

Specifications subject to change without notice. Printed in Japan, August 2016.